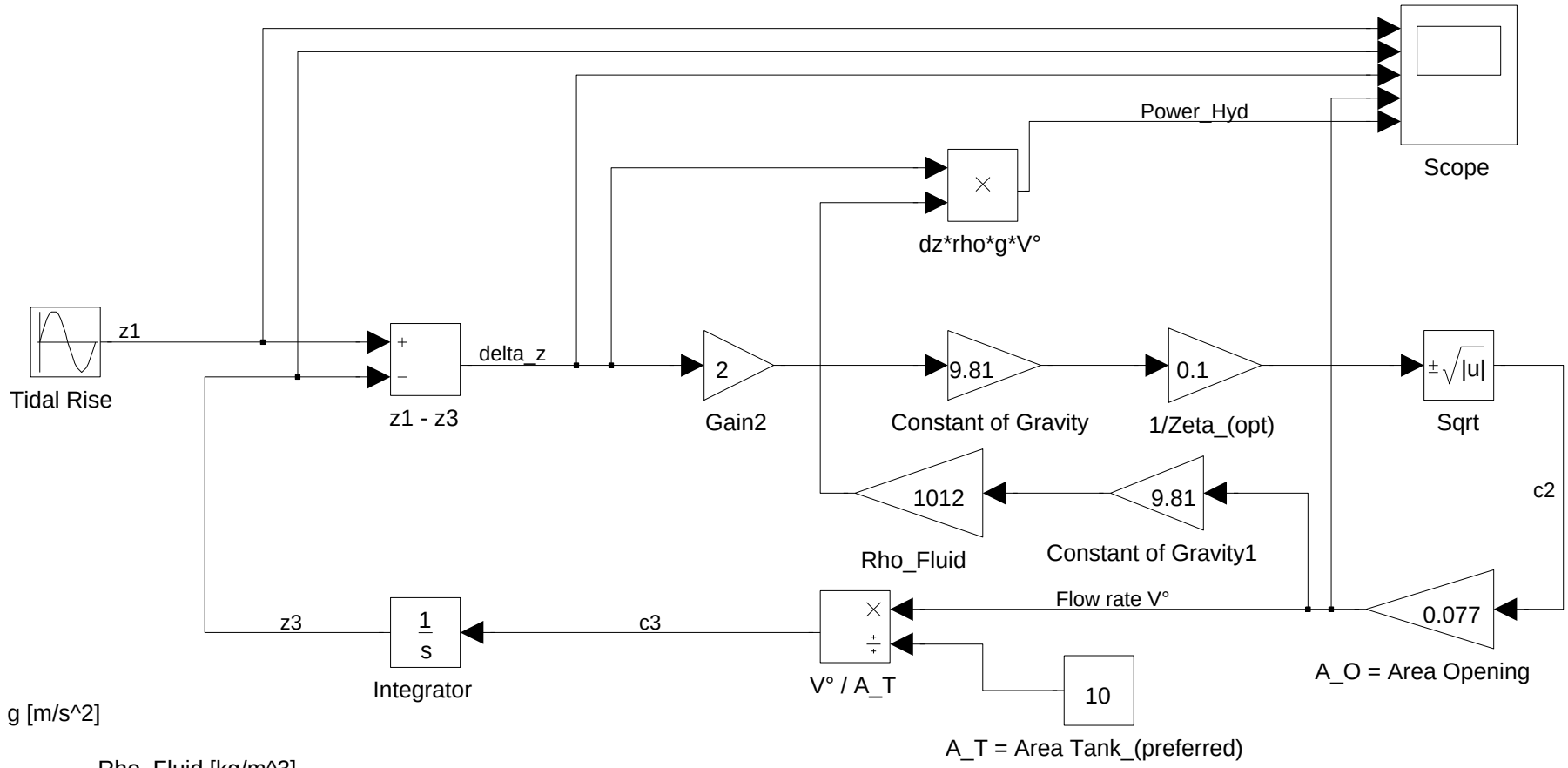


g [m/s^2]

Rho_Fluid [kg/m^3]
fresh water @ 4°C (0.999972 g/cm^3)
salt water - Northsee - 1012 kg/m^3

Diameter_Turbine = 0.31242 m -> Area_Turbine = 0.0766598