OmniVision Technologies Inc.

OVT ISP Manual

Jun. 29th, 2011

PRELIMINARY CONFIDENTIAL

Applications

- Mobile Phones/Cameras
- Stereo Cameras
- Notebook PCs
- Digital Video Camcorders (DVC)
- Portable Multimedia Players
- Digital Still Cameras (DSC)

General description

OVT ISP is a complete still picture and video input unit designed for SoCs providing image and video capture capability in mobile phones, Portable Media Players (PMPs) and notebooks with integrated cameras. The high-performance camera pipeline features image processing, stereo 3D processing, wide dynamic range processing (HDR & EDR), digital image stabilization and scaling functions. The integrated image signal processor (ISP) supports simple CMOS sensors without image pre-processing.

OVT ISP supports both parallel and serial input interfaces compatible with most CMOS sensors and several CPU and memory system interfaces. The CMOS sensor sends data to the ISP via parallel digital video interfaces or camera serial interface (CSI-2) MIPI. When communicating with a CPU or memory, 32-bit AHB interface and 64-bit AXI interface are supported.

OVT ISP supports resolutions ranging from QCIF up to 20 MP in a single low-cost and low-power design. To effectively deliver high resolutions, the processor features sophisticated defected pixel cancellation and noise reduction techniques to ensure image quality even when paired with low cost, high-resolution CMOS sensors commonly found in mobile devices.

OVT ISP costs about 1 million gates in logic and total area is 1.85 mm^2 based on TSMC 40lp process, zero wire load model running at 215MHz. Logic is around 40 percent of total area and the rest is SRAM.

PRELIMINARY CONFIDENTIAL

Features

System level

- 32-bit AHB slave interface
- 64-bit AXI master interface
- Two MIPI 4-lane IDI input interface (can be used as one 8-lane, still capture only)
- Two serial SCCB interfaces
- Parallel 10-bit DVP input interface

Size and speed

- Still capture mode

  5168x3876@30fps or @15fps 3D

- Video mode

  Maximum size: 2576x1932

  2560x1600@30fps

  1080P@60fps or @30fps 3D

  720P@120fps or @60fps 3D

Format

- Camera input

  RAW8, RAW10, RAW12, RAW14

  YUV422 (only support scale up/down, crop, SDE)

  RGB565, RGB888, JPEG (bypass mode)

- Read from memory

  RAW8, RAW10, RAW12

  YUV422 (only support scale up/down, crop, SDE)

- ISP output

  YUV422 (UYVY), YUV420

  RGB888, RGB565

  RAW8, RAW10, RAW12, RAW14

PRELIMINARY CONFIDENTIAL

Basic ISP features

- AECAGC, Auto exposure and gain control
- AWB, Auto white balancing (color temperature based)
- AFC, Auto focus control (25 points and single point)
- DPC, Defect pixel correction
- LENC, Lens shading correction (color temperature based)
- CCM, Color correction matrix (color temperature based)
- 50/60Hz flicker cancellation
- Enhanced color interpolation (De-mosaic)
- Gamma correction
- Noise reduction
- Sharpness enhancement
- Brightness, saturation, hue and contrast control
- Digital zoom (zoom in 4x, zoom out 16x)
- ARC, auto dynamic range control (HDR only)
- Flash light control
- Mechanical shutter control

Enhanced ISP features

- 3D video and still capture
- HDR/EDR video and still capture
- Support any size still image capture and process (limited by memory size)
- Low latency still image capture (from preview to still capture)
- Video mode auto-focus
- Video anti-shaking
- Software/hardware/optical combined EDOF
- ROI support
- Support RAW data capture (up to 16 bit/pixel)
- 3D support

    Multiple synchronization methods (support any sensor)

    Multiple 3D combinations

PRELIMINARY CONFIDENTIAL

A. Two cameras

B. One array by array camera

C. One pixel by pixel camera

Multiple output formats

A. Left/Right side by side

B. Up/Down frame by frame

C. Pixel by pixel (full size or half size)

- EDR support

  RAW data process with EDR

- HDR support

  Multiple frame HDR still image

  One sensor HDR video

  A. Split pixel

  B. Two lines by two lines

  Combined software & hardware HDR

- Special effects support

  Black white

  Negative

  Sepia

  Sketch

  Watercolor

  Ink

  Cartoon

  Color ink

PRELIMINARY CONFIDENTIAL

Software features

- Face detection
- Smile detection
- Eye blinking detection
- 1D/2D bar code reading
- YUV data process with EDR
- Special effects

  Frame

  Mask

  Superimpose

PRELIMINARY CONFIDENTIAL

Table of Contents

1 Pin description 12

2 Interfaces 18

2.1 Block Diagram 18

2.2 MIPI IDI Interface 18

2.3 Digital Video Port (DVP) 21

2.4 SCCB Interface 21

2.5 Sensor/Camera Controls 22

2.6 AHB Interface 24

2.7 AXI Interface 25

3 Memory 26

4 ISP function description 27

4.1 Cropping & Rescaling 28

4.2 Binning Correction 28

4.3 Lens Shading Correction 29

4.4 Defect Pixel Correction 29

4.5 Denoise 29

4.6 Edge Enhancement 29

4.7 White Balance & Color Correction 30

4.8 AEC/AGC 30

4.9 50/60 Hz Banding Control 30

4.10 Frame Exposure & Mechanical Shutter 30

4.11 Auto Flash Control 31

4.12 Auto Focus Control 31

PRELIMINARY CONFIDENTIAL

4.13 Special Effects 31

4.14 Video Anti-shake 34

5 Work flow 35

5.1 ISP work modes 35

5.2 ISP write data flow 37

5.3 ISP firmware process flow 38

5.4 Image stabilization process flow 39

5.5 Auto focus process flow 40

5.6 Command set 41

6 Register table 42

6.1 ISP TOP Register 42

6.2 ISP TOP Register (MCU) 47

6.3 Binning Register 48

6.4 LENC Register 50

6.5 LENC Register (MCU) 53

6.6 AWB Gain Register 60

6.7 AWB Gain Register (MCU Write) 63

6.8 DPC Register 65

6.9 DNS Register 70

6.10 CIP Register 76

6.11 CMX Register (MCU) 84

6.12 Combine Register 86

6.13 Combine Register (MCU Read) 88

6.14 Combine Register (MCU Write) 96

6.15 Normalize Register 104

PRELIMINARY CONFIDENTIAL

6.16 Normalize Register (MCU Read) 105

6.17 Normalize Register (MCU Write) 105

6.18 Tone Mapping Register 106

6.19 Tone Mapping Register (MCU Read) 107

6.20 Tone Mapping Register (MCU Write) 108

6.21 New SDE Register 114

6.22 SDE Register 115

6.23 YUV Crop Register (MCU Write) 116

6.24 UV DNS Register 117

6.25 YUV_HBIN Register 119

6.26 AFC Register 120

6.27 AFC Register (MCU Read) 122

6.28 AWB CT Register 128

6.29 AWB CT Register (MCU) 130

6.30 AWB Simple Register 135

6.31 AWB Simple Register (MCU Read) 137

6.32 AEC Register 140

6.33 AEC Register (MCU Read) 146

6.34 AEC Register (MCU Write) 146

6.35 High Level Register 146

6.36 Low Level Register 147

6.37 GPIO Register 148

6.38 TOP System Control Register 160

6.39 DVP Register 164

6.40 DMA Register 166

PRELIMINARY CONFIDENTIAL

6.41 SCCB Master1 Register 166

6.42 SCCB Master2 Register 168

6.43 Interrupt Register 169

6.44 IDI Register 173

6.45 MCU Control Register 175

6.46 AF window definition registers 200

6.47 AF control registers 201

6.48 Middle variables 205

7 Reference design 207

PRELIMINARY CONFIDENTIAL

Table of Figures

FIGURE 2-1 BLOCK DIAGRAM 18
FIGURE 2-2 MIPI DIAGRAM 18
FIGURE 2-3 SIGNAL TIMING 19
FIGURE 2-4 DVP INTERFACE TIMING DIAGRAM 21
FIGURE 2-5 SCCB MESSAGE FORMAT 22
FIGURE 2-6 XENON FLASH MODE 22
FIGURE 2-7 LED 1 FLASH MODE 23
FIGURE 2-8 LED 2 FLASH MODE 23
FIGURE 2-9 LED 3 FLASH MODE 24
FIGURE 2-10 FRAME EXPOSURE (FREX) MODE 24
FIGURE 2-11 TIMING DIAGRAM OF FREX 24
FIGURE 4-1 ISP BLOCKS 27
FIGURE 4-2 SKETCH 32
FIGURE 4-3 WATERCOLOR 33
FIGURE 4-4 COLOR INK 33
FIGURE 4-5 CARTOON 34
FIGURE 5-1 WORK MODES 35
FIGURE 5-2 RESET TIMING 35
FIGURE 5-3 SLEEP TIMING 36
FIGURE 5-4 IDLE TIMING 36
FIGURE 5-5 ISP DATA FLOW 37
FIGURE 5-6 FIRMWARE PROCESS FLOW 38
FIGURE 5-7 IMAGE STABILIZATION PROCESS FLOW 39
FIGURE 5-8 AUTO FOCUS PROCESS FLOW 40
FIGURE 7-1 OV5690 FOR 3D MIPI 207

PRELIMINARY CONFIDENTIAL

1 Pin description

pin	signal name	pin type	description
System Signals			
	p_tm_i	input	test mode enable for scan chain
	p_rst_n_i	input	system reset, active low
	p_pwdn_i	input	power down(sleep), active high
	p_sclk_i	input	system clock
	isp_int_o	output	isp interrupt
AHB Signals			
	ahb_clk_i	input	
	ahb_resetn_i	input	
	ahb_readyin_i	input	
	ahb_addr_i[31:0]	input	
	ahb_trans_i[1:0]	input	
	ahb_write_i	input	
	ahb_size_i[2:0]	input	
	ahb_burst_i[2:0]	input	
	ahb_wdata_i[31:0]	input	
	ahb_sel_i	input	
	ahb_rdata_o[31:0]	output	
	ahb_readyout_o	output	
	ahb_resp_o[1:0]	output	
Primary MIPI Signals			
	sclk2_i	Input	faster than clk_data0_i and clk_data1_i
	clk_data0_i	Input	

PRELIMINARY CONFIDENTIAL

header_en0_i	Input	
virtual_channel0_i[1:0]	Input	
data_type0_i[5:0i	Input	
word_count0_i[5:0]	Input	
ecc0_i[7:0]	Input	
data_en0_i	Input	
csi_data0_i[31:0]	Input	
bytes_en0_i[1:0]	Input	
vvalid0_i[3:0]	Input	
hvalid0_i[3:0]	Input	
dvalid0_i[3:0]	Input	
Secondary MIPI Signals		
clk_data1_i	Input	
header_en1_i	Input	
virtual_channel1_i[1:0]	Input	
data_type1_i[5:0]	Input	
word_count1_i[5:0]	Input	
ecc1_i[7:0]	Input	
data_en1_i	Input	
csi_data1_i[31:0]	Input	
bytes_en1_i[1:0]	Input	
vvalid1_i[3:0]	Input	
hvalid1_i[3:0]	Input	
dvalid1_i[3:0]	Input	
AXI Signals		
arvalid	output	Read address valid
araddr[31:0]	output	Read address

PRELIMINARY CONFIDENTIAL

arlen[3:0]	output	Read burst length
arsize[2:0]	output	Read burst size
arburst[1:0]	output	Read burst type
arlock[1:0]	output	Read lock type
arcache[3:0]	output	Read cache type
arprot[2:0]	output	Read protection type
arid[3:0]	output	Read address ID
arready	input	Read address ready
rvalid	input	Read valid
rlast	input	Read last
rdata[63:0]	input	Read data
rresp[1:0]	input	Read response
rid[3:0]	input	Read ID tag
rready	output	Read ready
awvalid	output	Write address valid
awaddress[31:0]	output	Write address
awlen[3:0]	output	Write burst length
awsize[2:0]	output	Write burst size
awburst[1:0]	output	Write burst type
awlock[1:0]	output	Write lock type
awcache[3:0]	output	Write cache type
awprot[2:0]	output	Write protection type
awid[3:0]	output	Write address ID
awready	input	Write address ready
wvalid	output	Write valid
wlast	output	Write last
wdata[63:0]	output	Write data

PRELIMINARY CONFIDENTIAL

wstrb[7:0]	output	Write strobes
wid[3:0]	output	Write ID tag
wready	Input	Write ready
bvalid	input	Write response valid
bresp[1:0]	input	Write response
bid[3:0]	input	Write response ID
bready	output	Write response ready
aclk	input	clock
Camera Sensor Signals		
sn_rst_n0_o	output	reset image sensor0/sensor1
sn_rst_n2_o	output	reset image sensor2
sn_fsin0_i	input	frame sync0
sn_fsin0_o	output	frame sync0 / general control output
sn_fsin0_oen_o	output	general IO input/output control
sn_fsin1_i	input	frame sync1
sn_fsin1_o	output	frame sync1 / general control output
sn_fsin1_oen_o	output	general IO input/output control
sn_strobe0_i	Input	strobe input from image sensor0
sn_strobe1_i	Input	strobe input from image sensor1
sn_clk0_o	output	output clock to image sensor0/sensor1
sn_clk2_o	output	output clock to image sensor2
sn_pwdn0_o	output	power down image sensor0 / general control output
sn_pwdn1_o	output	power down image sensor1 / general control output
sn_pwdn2_o	output	power down image sensor2 / general control output

PRELIMINARY CONFIDENTIAL

sn_shutter0__o	output	control mechanical shutter0 / general control output
sn_shutter1_o	output	control mechanical shutter1 / general control output
sn_pwm_o	output	strobe flash input / general control output
sn_frex0	output	frame exposure output for sensor0 / general control output
sn_frex1	output	frame exposure output for sensor1 / general control output
debug_enable	output	dvp debug port enable
gc0_o	output	general control output
gc0_i	input	general control input
gc0_oen_o	output	general IO input/output control
gc1_o	output	general control output
gc1_i	input	general IO input/output control
gc1_oen_o	output	general control output
DVP Signals		
p_vsync_i	Input	video input vertical signal
p_href_i	Input	video input horizontal signal
p_pclk_i	Input	video input clock
p_y_i	Input	video data output [9:0]
SCCB Signals		
p_c1_scl	output	SCCB interface output clock
p_c1_sda_i	input	SCCB interface data
p_cl_oen_o	output	
p_cl_sda_o	ouput	
p_c2_scl	output	SCCB interface input/output clock
p_c2_sda_i	input	

PRELIMINARY CONFIDENTIAL

p_c2_oen_o	output	
p_c2_sda_o	output	SCCB interface data
Debug Signals		
p_vsync_o	output	video output vertical signal (debug)
p_href_o	output	video output horizontal signal (debug)
p_pclk_o	output	video output clock (debug)
p_y_o[9:0]	output	video output data (debug)

Table 1-1 Pin signals

PRELIMINARY CONFIDENTIAL

2 Interfaces

2.1 Block Diagram

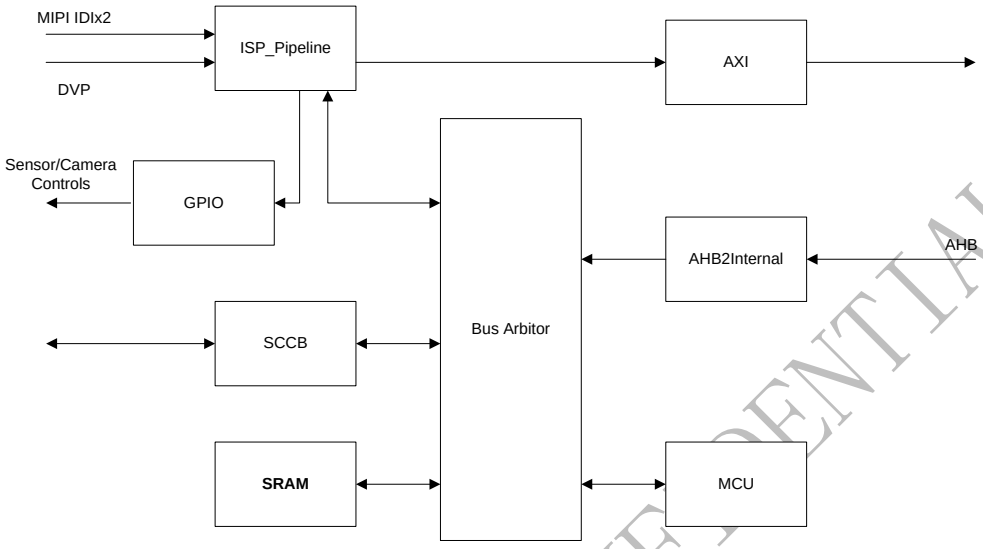

Figure 2-1 Block diagram

2.2 MIPI IDI Interface

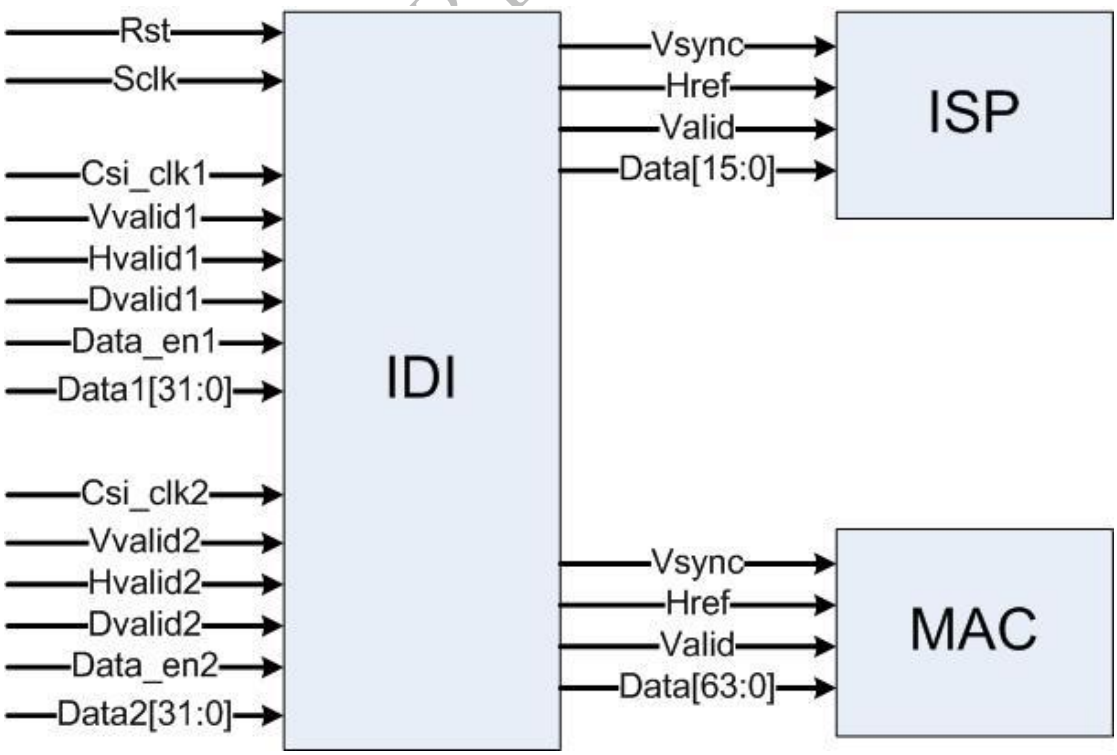

Figure 2-2 MIPI diagram

The OVISP supports two MIPI IDI interfaces, for 4-lane primary interface and the 4-lane secondary interface. The maximum frequency is 1 GHz. The MIPI Alliance Standard for Camera Serial Interface 2 (CSI-2) specification defines standard data transmission and control interface between transmitter and receiver. The MIPI data transmission interface is a unidirectional differential serial interface with data and clock signals. The physical layer of this interface is MIPI Alliance Specification for D-PHY.

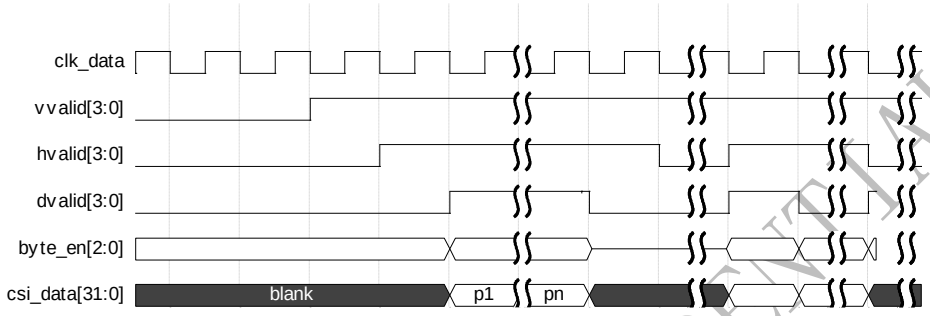

Figure 2-3 Signal timing

IDI interface supports several formats listing as below.

RGB888

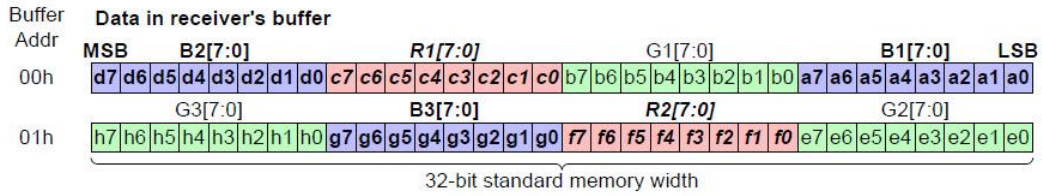

Figure 110 RGB888 Data Format Reception

RGB565

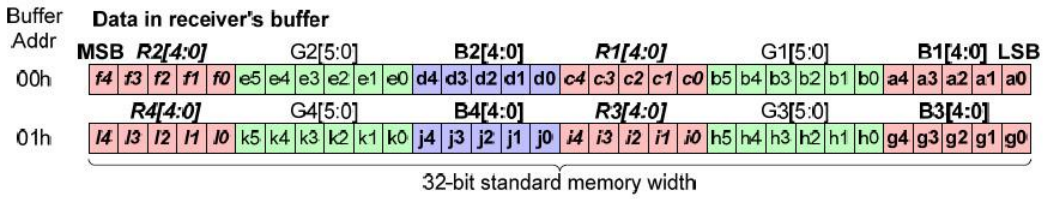

Figure 112 RGB565 Data Format Reception

YUV422

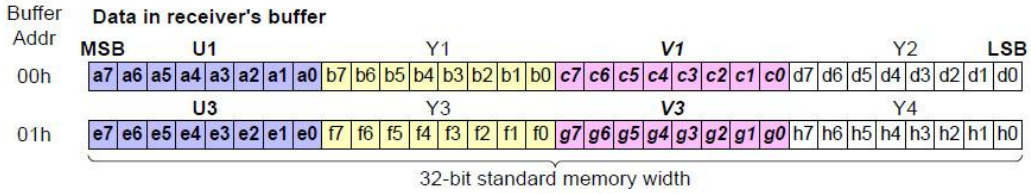

Figure 115 YUV422 8-bit Data Format Reception

RAW8

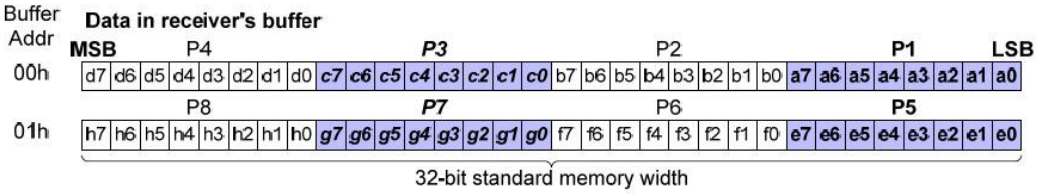

Figure 122 RAW8 Data Format Reception

RAW10

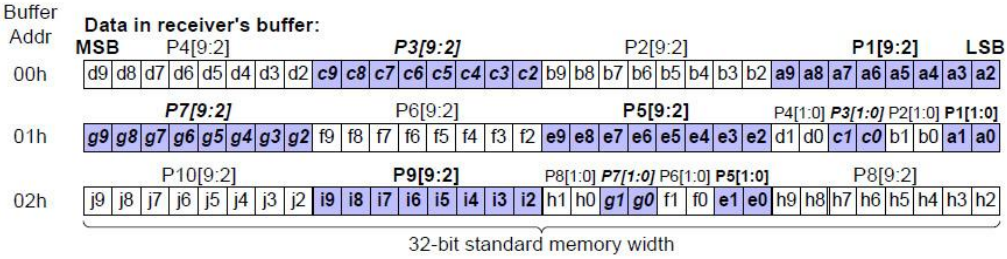

Figure 123 RAW10 Data Format Reception

RAW12

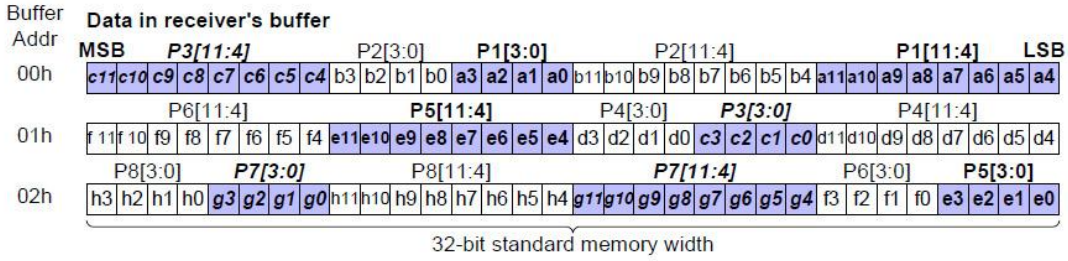

Figure 124 RAW12 Data Format Reception

RAW14

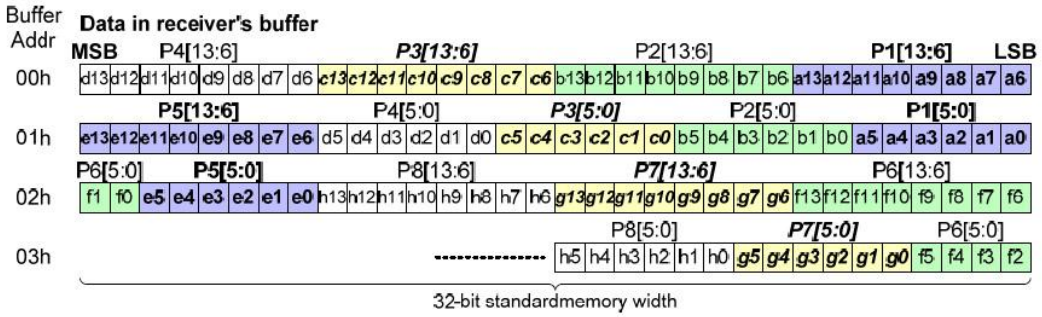

Figure 125 RAW 14 Data Format Reception

2.3 Digital Video Port (DVP)

The DVP interface is a parallel data port that provides video data from the sensor in raster-scan order, left-to-right, top-to-bottom, one pixel at a time, at the pixel clock rate. Figure 2.4 shows the timing diagram of the DVP interface.

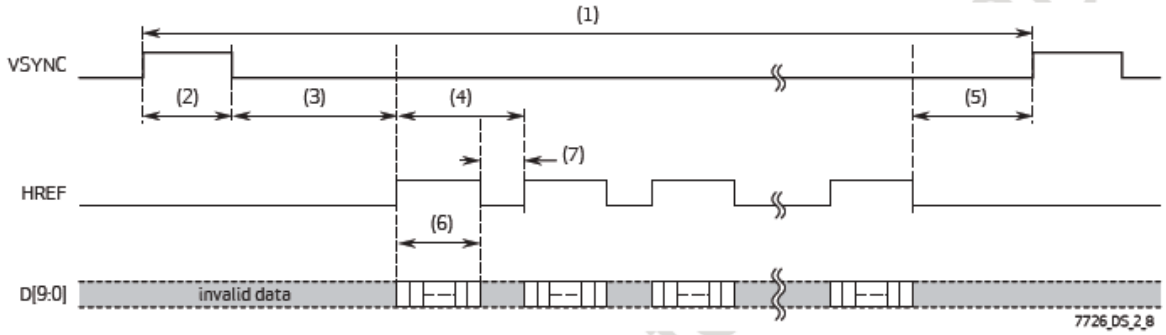

Figure 2-4 DVP interface timing diagram

2.4 SCCB Interface

There are two SCCB master interfaces and one SCCB slave interface. The slave interface is for debug purpose, it shares pins with one of the master interface. On power up, the pins are configured as SCCB slave, after the system is up and the AHB bus is ready to take control the pins will be configured as SCCB master for normal operation. The SCCB master interface controls the image sensor and lens operations. Multiple SCCB slaves (devices) can be connected to one SCCB master, the device ID is used to identify the specific slave. The OVISP supports 8-bit device ID, 8-bit or 16-bit sub address, and 8-bit data. Figure 2.5 shows an SCCB message format.

PRELIMINARY CONFIDENTIAL

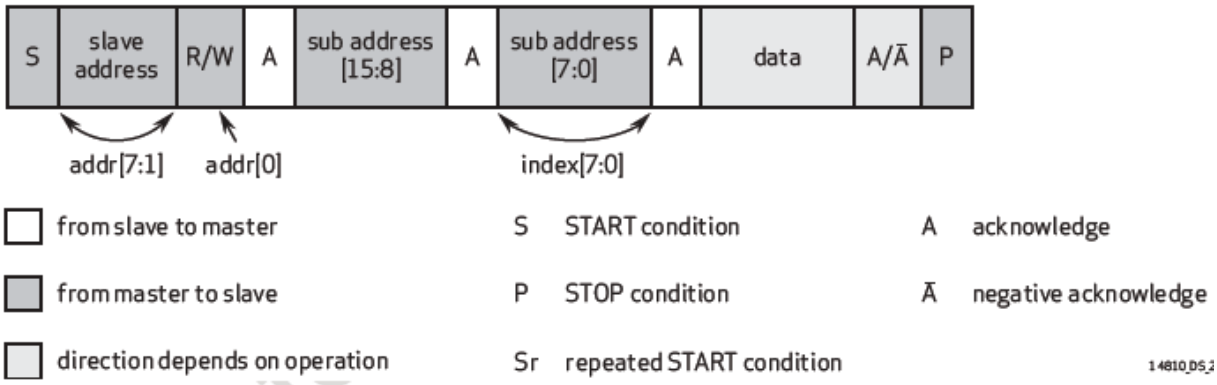

Figure 2-5 SCCB message format

2.5 Sensor/Camera Controls

Programmable signals are used to control the sensor power down, the strobe flash and the mechanical shutter.

In rolling shutter mode, OVISP supports both LED and Xenon mode. There are two different kinds of flash output: continuous and pulse. In continuous output, the flash light module will stay active until the strobe end request is sent. In pulse output, the flash light module will be activated only one time.

Xenon Flash Mode:

After the strobe request is submitted, the strobe pulse will be activated at the beginning of the third frame, which will be correctly exposed. The pulse width is programmable in Xenon mode between 1H and 4H, where H is one horizontal period ([1/fps]×[1/number of total lines] sec).

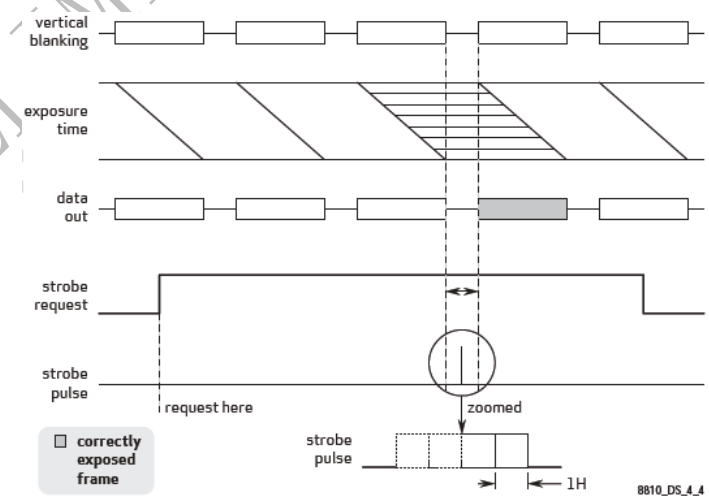

Figure 2-6 Xenon flash mode

PRELIMINARY CONFIDENTIAL

LED 1 & 2 Mode:

Two frames after the strobe request is submitted, the third frame is correctly exposed. The strobe pulse will be activated only one time if the strobe end request is set correctly. If end request is not sent, the strobe signal is activated intermittently until the strobe end request is set. The number of skipped frames is programmable.

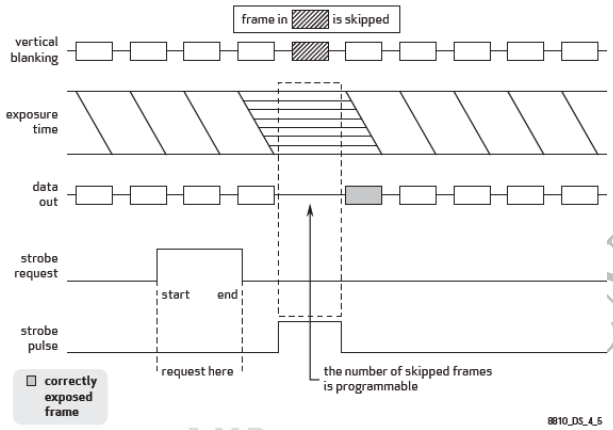

Figure 2-7 LED 1 flash mode

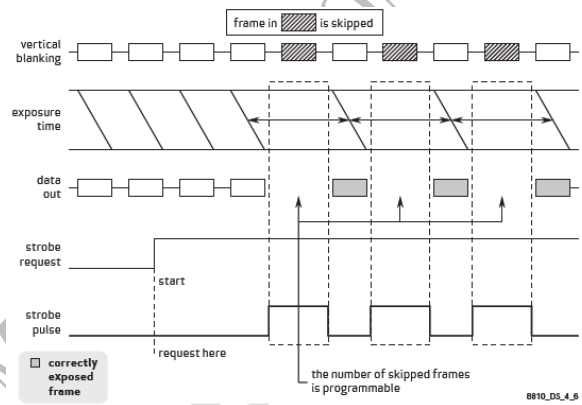

Figure 2-8 LED 2 flash mode

LED 3 Mode:

In LED 3 mode, the strobe signal stays active until the strobe end request is sent.

PRELIMINARY CONFIDENTIAL

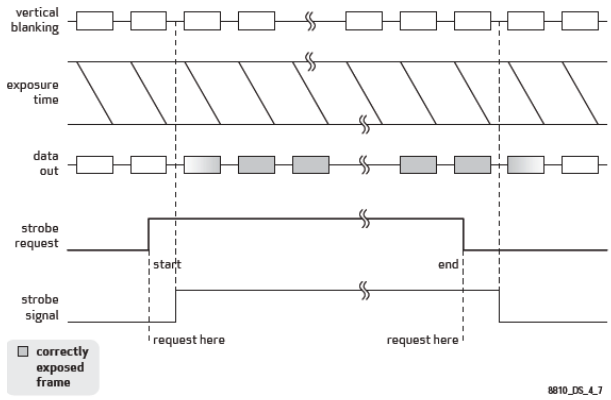

Figure 2-9 LED 3 flash mode

In frame exposure mode, the OVISP send FREX request to sensor via sensor's FREX pin. The sensor will send strobe output signal to control flash light. ISP should handle mechanical shutter control and make it synchronized with FREX pin.

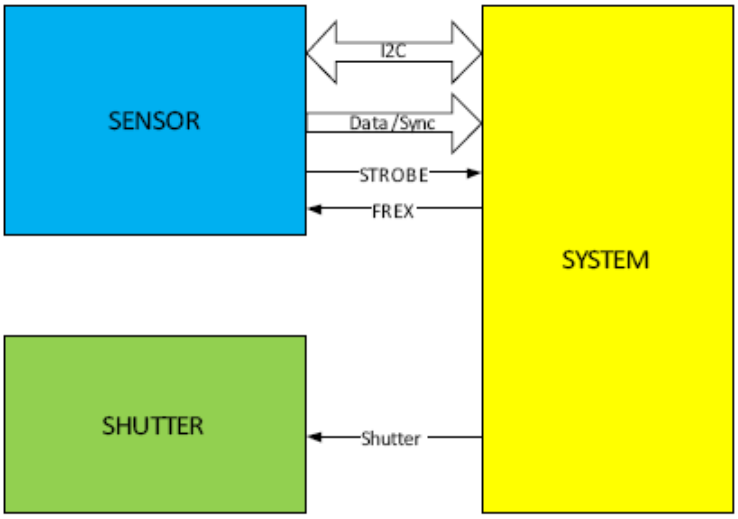

Figure 2-10 Frame exposure (FREX) mode

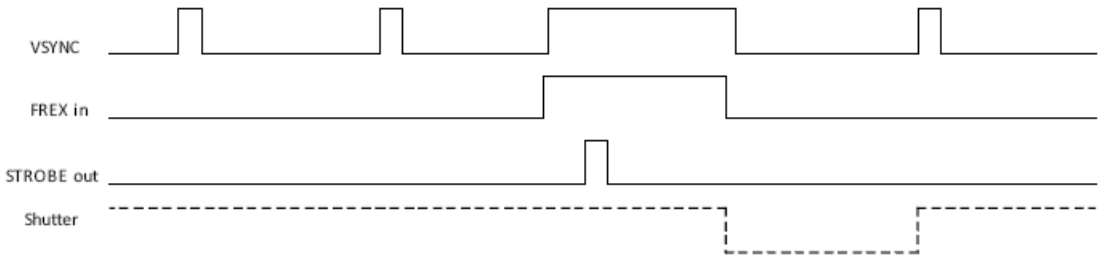

Figure 2-11 Timing diagram of FREX

2.6 AHB Interface

OV AHB Slave complies with standard AMBA AHB Slave Spec. It is synchronous to the internal clock. Rev 2.0. Both AHB data and address are 32-bit wide. It doesn't support dynamic

endianness, “ERROR”, “RETRY” and “SPLIT” response and Split-capable slave. For burst operation, it supports “SINGLE”, “WRAP4”, “WRAP8”, and “WRAP16” operation.

2.7 AXI Interface

The AXI Interface is a burst-based 64bit master. Data is transferred between the OVISP and the AXI slave using a write data channel to the AXI slave or a read data channel to the OVISP. Figure 2.12 shows the frame-level handshaking between the OVISP and the customer’s system controller.

The clock of the AXI interface can be as high as 400MHz. It is asynchronous to the internal clock. The AXI interface supports outstanding for both write and read operations. The maximum outstanding is 8. It supports 1 write ID and 2 read ID.

The AXI interface meets the AMBA AXI protocol V1.0, include pin definition, write and read timing.

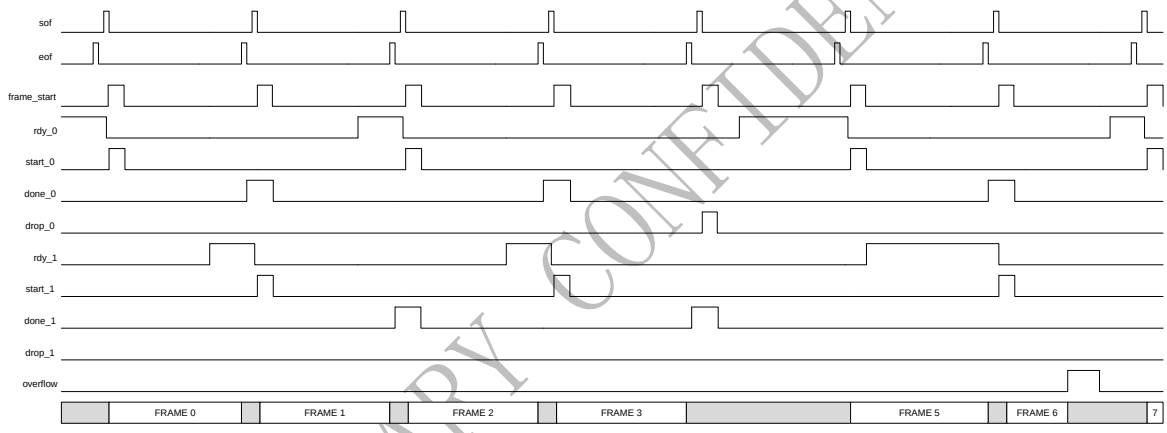

Figure 2-12 Handshaking between OVISP and Controller

PRELIMINARY CONFIDENTIAL

3 Memory

Name	Type	Address	Size (bit)
CS_ROM	Line Buffer	0x000000~0x01BFFF	28672x32 = 917504
Data RAM	Line Buffer	0x01C000~0x01EFFF	3072x32 = 98304
I-Cache	Line Buffer	0x01F000~0x01F3FF	256x32 = 8192
D-Cache	Line Buffer	0x01F400~0x01F7FF	256x32 = 8192
I-Tag	Line Buffer	0x01F800~0x01FCFF	64x23 = 1472
D-Tag	Line Buffer	0x01FD00~0x01FFFF	64x23 = 1472
INP/DNS/DPC	Line Buffer		2582x24+2582x20x6 = 371808
SCALE	Line Buffer		2582x32x2 = 165248
LENC ONLINE	Line Buffer		768x24x3+768x14 = 66048
BINNING/RAWDCW	Line Buffer		2582x24 = 61968
ANTISHAKE	Line Buffer		1500x36 = 54000
AWB	Line Buffer		1296x10+1024x4 = 17056
AFC	Line Buffer		630x8x2 = 10080
UVDNS	Line Buffer		650x8 = 5200
DPC2	Line Buffer		192x26 = 4992
TONEMAPPING	Line Buffer		256x17 = 4352
AEC	Line Buffer		256x20 = 5120
AXI	Line Buffer		646X64 896X128 32X128X2 64x128 (dual port) 64x64 (dual port)
RTM	Line Buffer		2582x10

Table 3-1 Memory list

PRELIMINARY CONFIDENTIAL

4 ISP function description

As shown in following figure, OVT's advanced ISP includes four major blocks: raw processing block, HDR/EDR processing block, YUV processing block and auto control block. The raw processing block is processing Bayer raw images and transforming them into RGB/YUV images. The HDR/EDR processing block combines two LDR images captured with different exposures time into one HDR image and rendering back to fit the major LDR displays. The YUV processing block is processing RGB/YUV images. All three processing blocks are running pixel by pixel with line buffer to store temporary data. And they also collect statistics of current processing image for auto control block. The auto control block is processing statistics collected in images and control the parameters of sensor and ISP to achieve best image quality.

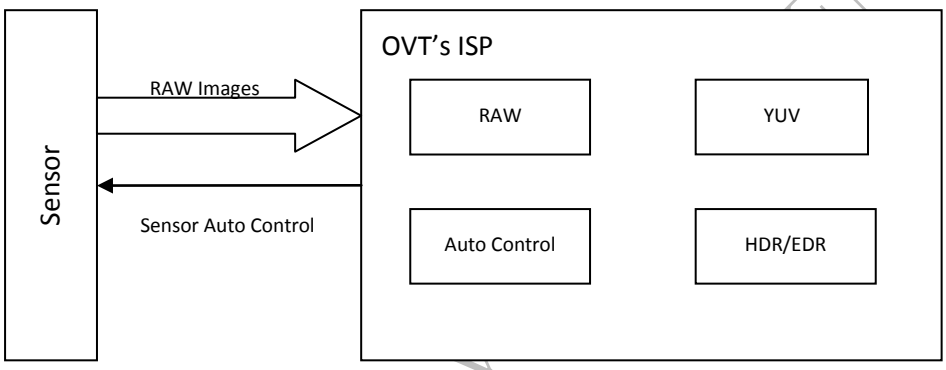

Figure 4-1 ISP blocks

The raw processing block can process RGB Bayer 8/10/12 bit raw images. The maximum size of raw images it can process is limited by the width of its line buffer. It includes cropping, down-scaling, lens shading correction, defect pixel correction, color interpolation, denoise, sharpening, white balance and color correction.

The YUV processing block is working on YUV domain. And it also supports RGB images, which will be transformed into YUV space before processing. It includes cropping, down-scaling, digital zoom-in, video anti-shake, color noise removal, brightness/contrast/hue/saturation adjustment and special effects.

HDR/EDR processing block can work in two different modes: HDR and EDR. In HDR mode, there are two input LDR images captured with different exposures. The HDR combination module in the block will combine the two LDR images into one HDR image. Because most display devices have lower dynamic range, a tone-mapping module in the block will adaptively render the HDR image into LDR image without losing details and color to fit the dynamic range of display devices. In EDR mode, there are only single exposure image, which already lost

PRELIMINARY CONFIDENTIAL

information in the high light saturated regions. However the tone-mapping module still can recover details in the shadow, which may lose using traditional rendering method.

Auto control block is processing statistics collected by the processing blocks to automatically adjust the parameters of sensor and ISP. For an example, it will adjust exposure of future frames based on the brightness estimated from current frame. It includes auto exposure/gain control, auto white balance control, auto focus control, flash control and so on. And also it will automatically adjust parameters of ISP's processing blocks based on current sensor conditions.

Because OVT's ISP can process two different images at same time to support HDR, it also can use the processing power to process 3D stereoscopic images. In order to synchronize the two cameras in both space and time domain, an off-line calibration and an online correction module is applied on RAW domain to reduce the difference between two cameras.

4.1 Cropping & Rescaling

Although most sensors provide the cropping function, some of them may change the timing after change the cropping window, which may cause exposure time changes. In order to avoid such problems, ISP will support the cropping in both RAW domain and YUV domain, without changing the timing of sensor.

The rescaling includes both downscale and upscale (digital zoom-in). The down-scale can be applied in RAW domain and YUV domain. YUV domain downscale can keep more details than RAW domain downscale, however it also consumes more power. So it is recommended to choose different scaling factors in RAW domain and YUV domain to fit different image quality and power consumption request.

The upscale (digital zoom-in) is working with the cropping: at first it crops a smaller window of the input image and then zoom-in to the input size. With fast enough bandwidth of the output data bus, it can support up to x4 times zoom-in.

4.2 Binning Correction

In order to improve the output speed, some sensor introduced binning function to combine multiple pixels into one output pixel. It can help to reduce the readout speed and increase SNR. However some binning implementation method also may introduce zigzag artifacts, which needs a post-processing to correct it.

PRELIMINARY CONFIDENTIAL

4.3 Lens Shading Correction

Lens shading correction (vignette correction) is designed to correct the non-uniformity caused by lens, which often includes non-uniformity in both luminance and chrominance. The luminance non-uniformity is mainly module related, which means once a module is calibrated under one light source, it often can work quite well under other light sources. The chrominance non-uniformity is often color temperature related, which means the chrominance non-uniformity may vary under different light sources.

OVT's advanced lens shading correction includes one pre-calibrated model and a smart color vignette correction. The pre-calibrated model includes one curve for the luminance and two curves for chrominance, which are calibrated under a uniform light source. The smart color vignette correction will automatically estimate the color non-uniformity from images, which can reduce the lens shading under different light sources.

4.4 Defect Pixel Correction

Defect pixels are defined as those pixels with high possibility to be brighter or darker than its neighboring pixels, which includes both dead pixels and wounding pixels. When sensor gain, exposure time or temperature increases, there are more defects pixels. DPC 2.3 is an online detection and correction algorithm. Because a pixel is more likely to be a defect pixel when there is already one defect pixel within its neighbors, DPC 2.3 needs to remove not only single defect pixel but also clusters.

4.5 Denoise

The denoise algorithm can help to reduce the random noise in each channel, which includes two major modules: the recursive denoise on RAW and UV denoise on YUV. The first module is working with color interpolation to improve the SNR of RAW data. The second module is designed to remove color noise in UV channels.

4.6 Edge Enhancement

Edge enhancement is also called as sharpening, which increases the local contrast near edges to get visually sharper edges. In this ISP, it uses the well-known un-sharp mask method. The un-sharp mask is basically a low pass filter. The difference between the original signal and the low passed version is the high frequency, which includes both edge and noise. A user-defined soft threshold is used to extract the edge: only the part of high frequency higher than the threshold can pass and amplified by the user-defined sharpening level.

PRELIMINARY CONFIDENTIAL

4.7 White Balance & Color Correction

There are a lot of different auto white balance methods. OVT's advanced CT based AWB is based on the assumption that most lighting source should be very close to the color temperature curve. On the other hand, if a region is found near the CT curve, this region is very possible to be a gray object under one lighting condition. Because of the difference in sensor's spectrum response, the color temperature curve should be calibrated for different kinds of sensor.

In traditional sensor color correction pipeline, single matrix is used to either match the sensor's spectrum response with a standard spectrum response or to match the captured color target under a special light source with the pre-calibrated value of the target. However sensor crosstalk may reduce the color accuracy under different light sources. With OVT's CT based color correction, customer can calibrate three color matrixes under three different lighting conditions. The color temperature here is defined by the ratio of red channel AWB gain and blue channel AWB gain. So customer can define three matrixes (C_1, C_2, C_3) and their corresponding color temperatures (T_1, T_2, T_3). Based on current frame AWB gain (G_B,G_R), algorithm can automatically decide the current color matrix C.

4.8 AEC/AGC

There are two modules in AEC/AGC. The first module is to measure the luminance to decide whether current image is too bright or too dark. The second module is to auto control the exposure time and gain to get a well exposure image and smooth transforming video. Basically AEC/AGC in this ISP is using a weighted average of current frame as the luminance measurement. And auto control module will adjust exposure and gain to keep the weighted average within a user defined range.

4.9 50/60 Hz Banding Control

In rolling shutter mode, each line in same frame has different exposure start and end time, so the luminance variation of the light sources will introduce banding in the images. Because most sensors have its own detector to detect the frequency of the light sources, the ISP will use the detection result and limit the exposure time to avoid the banding.

4.10 Frame Exposure & Mechanical Shutter

Using rolling shutter exposure, each line in same frame has different exposure start and end time, so a horizontal moving object will be captured at different position in the image. Such artifacts are known as rolling shutter distortion. Some high end DSC sensors support frame exposure, which will avoid such distortion when capture moving objects.

PRELIMINARY CONFIDENTIAL

In order to support frame exposure, an external mechanical shutter is necessary. Before the frame exposure start, the shutter is opened to allow light coming to the pixels. And then all lines start integration at same time. After a certain exposure time, the shutter will be turned off to avoid further integration and the image start to read out. Once whole frame are read out, the shutter will open for again and wait for the next shot.

4.11 Auto Flash Control

To achieve the best image quality in low light conditions, the use of a strobe flash is recommended. ISP provides a programmable strobe signal function. Based on sensor exposure mode difference, rolling shutter mode or frame exposure mode, there is slightly difference in timing.

User can define a gain threshold to decide when to turn on the flash: when AEC/AGC needs to use larger gain, auto flash control will turn on the flash light. Once the light is turned on, another gain threshold will be used to decide when to turn off the flash light. The ratio between the two thresholds should be large enough to avoid flickering when capturing video.

4.12 Auto Focus Control

Both Single Servo AF and Continuous Servo AF use coarse-to-fine step searching strategy to search for the maximum contrast of the object in selected AF window. The algorithm would drive the focusing motor in lens with large step to approach the peak contrast, then change to small step to get to the peak contrast. If the algorithm cannot find any position that matches the stop criteria, it would do a wrap-around searching and stop at the position with maximum contrast.

When Continuous Servo AF is triggered, AFC3.0 would use horizontal and vertical projected histogram data from sensor AF ISP to detect scene change. If the tracking option is disabled, AFC3.0 would enter focusing procedure automatically when the object in selected window stops moving/changing. If the tracking option is enabled, AFC3.0 would analyze the contrast change when the object in selected window is moving and drive the focusing motor to the predicted position.

4.13 Special Effects

The special effects manually adjust YUV channels of the image. It can support but not limited to following functions:

- Black White
- Negative

PRELIMINARY CONFIDENTIAL

- Sepia
- Sketch
- Watercolor
- Ink
- Cartoon
- Color ink

Below images are the performances of these special effect features.

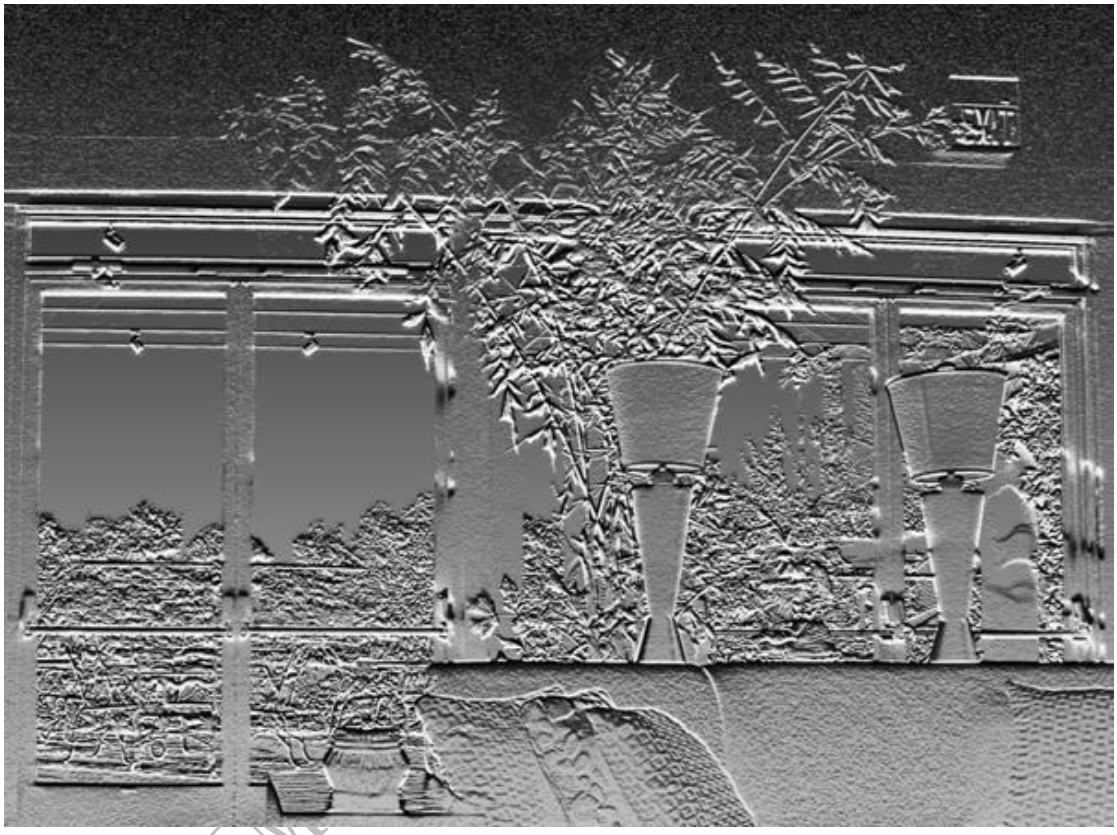

Figure 4-2 Sketch

PRELIM

Figure 4-3 Watercolor

Figure 4-4 Color ink

Figure 4-5 Cartoon

4.14 Video Anti-shake

Video anti-shake is a digital process designed to reduce hand shaking when capturing videos. In order to do this, sensors need to output a larger image than necessary. The algorithm will crop a window from the input to get final video frames. At first, the algorithm can automatically estimate the camera's motion in current frame. Then comparing with camera motion in previous frames, it can predict the camera motion in next frame. Finally to reduce the shaking in next frame, it can compensate the camera motion via moving the cropping window of next frame toward the predicted motion direction. Assuming that the prediction is very accurate without any error, the cropping window should move the distance exactly as long as the predicted motion to fully remove the shaking. However when there is error in the predicted motion direction, the longer distance may cause even worse shaking videos. So in order to improve the robustness, only a small moving distance is allowed in every frame.

PRELIMINARY CONF

5 Work flow

5.1 ISP work modes

There are three work modes for OVT ISP: power on, sleep, and power off.

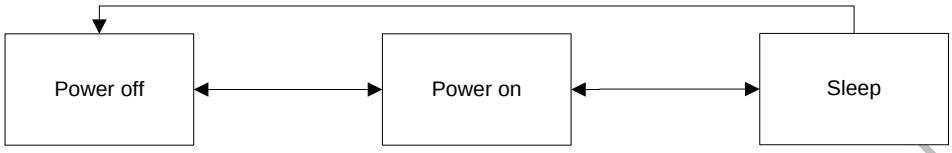

Figure 5-1 Work modes

Initial, pad reset

When initial power on or deassert p_rst_n, all register and logic will be reset to default. Most ISP modules default states are off except register related modules, such sccb_slave, wishbone (AHB) bus.

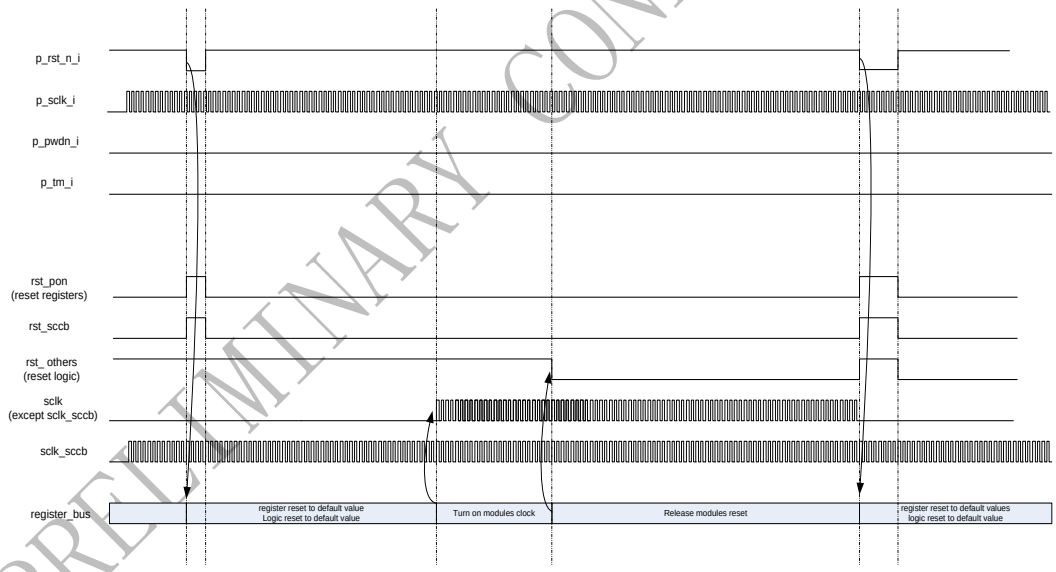

Figure 5-2 Reset timing

Sleep, resume

After system works in the normal mode, assert p_pwdn_i will trigger rst_others and stop the clock. It will reset all internal logic only, not registers. When deassert p_pwdn_i, the system will go back to normal operation

PRELIMINARY CONFIDENTIAL

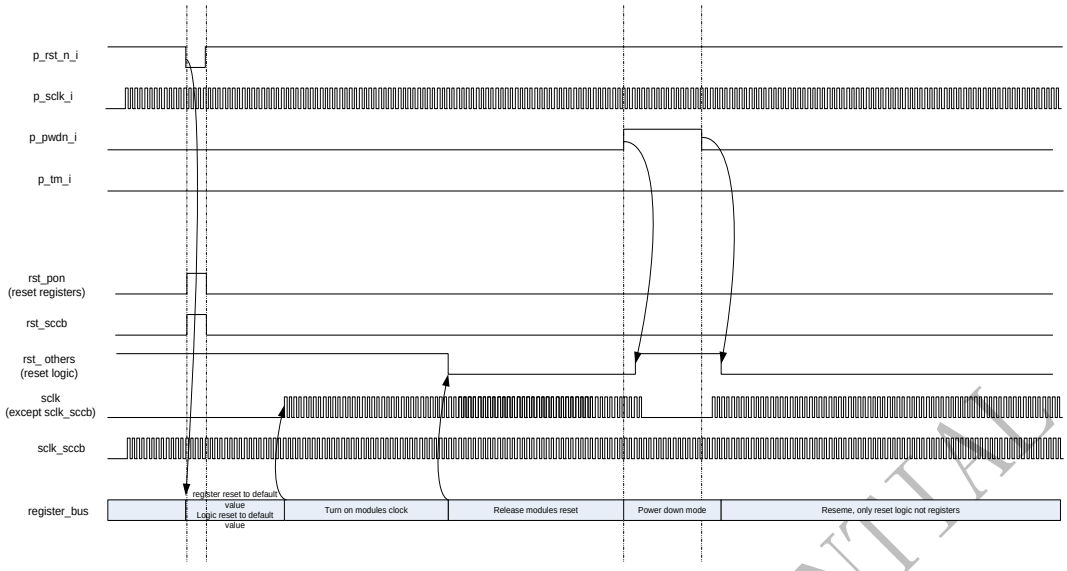

Figure 5-3 Sleep timing

IDLE mode

During normal operation, when host sends an idle command, RISC will turn off all ISP modules and enter IDLE mode.

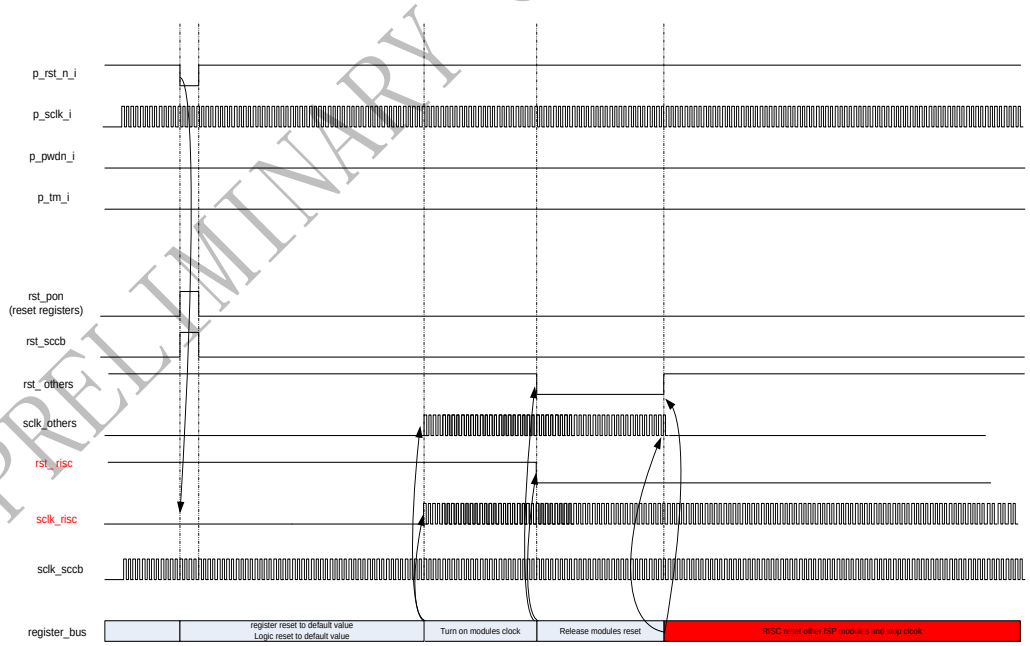

Figure 5-4 Idle timing

PRELIMINARY CONFIDENTIAL

5.2 ISP write data flow

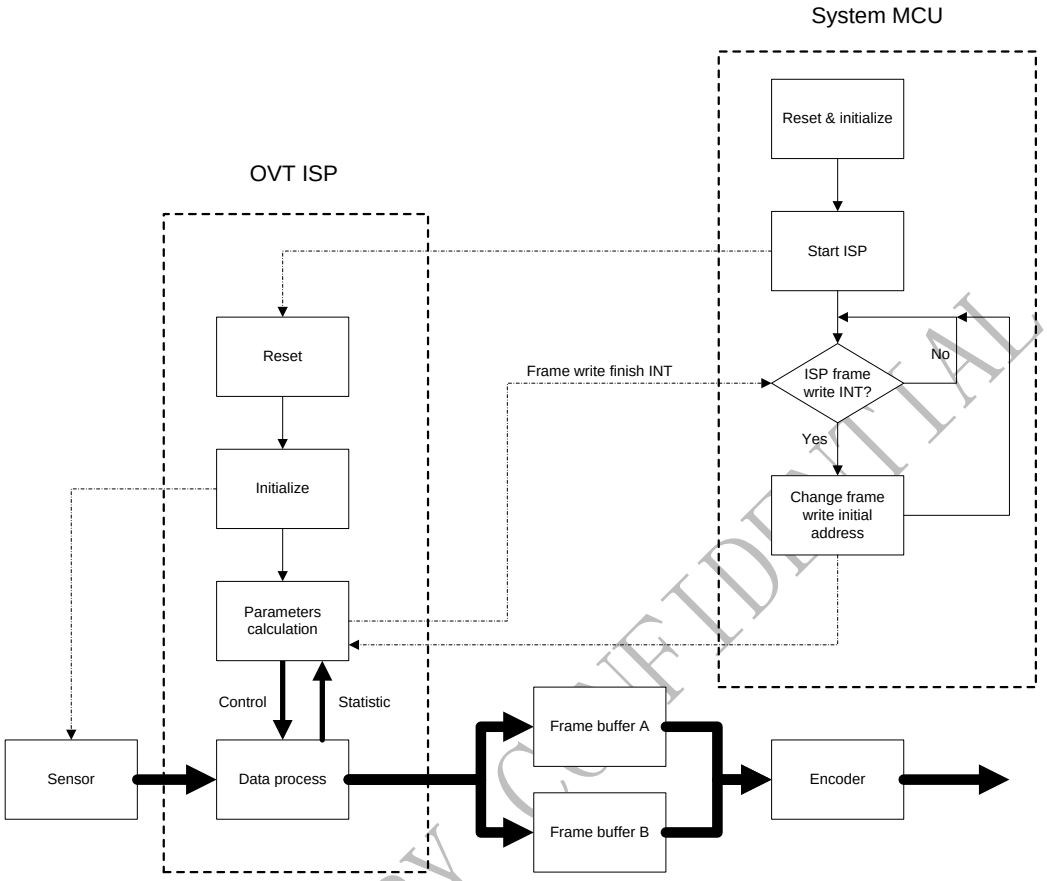

Figure 5-5 ISP data flow

After MCU starts ISP, ISP works as a master. It sends a finish interrupt to MCU after writing one frame. MCU should let ISP know if next frame need to be written to memory when MCU receives the interrupt. Otherwise ISP won't write next frame data to buffer and send out a drop interrupt to MCU.

PRELIMINARY CONFIDENTIAL

5.3 ISP firmware process flow

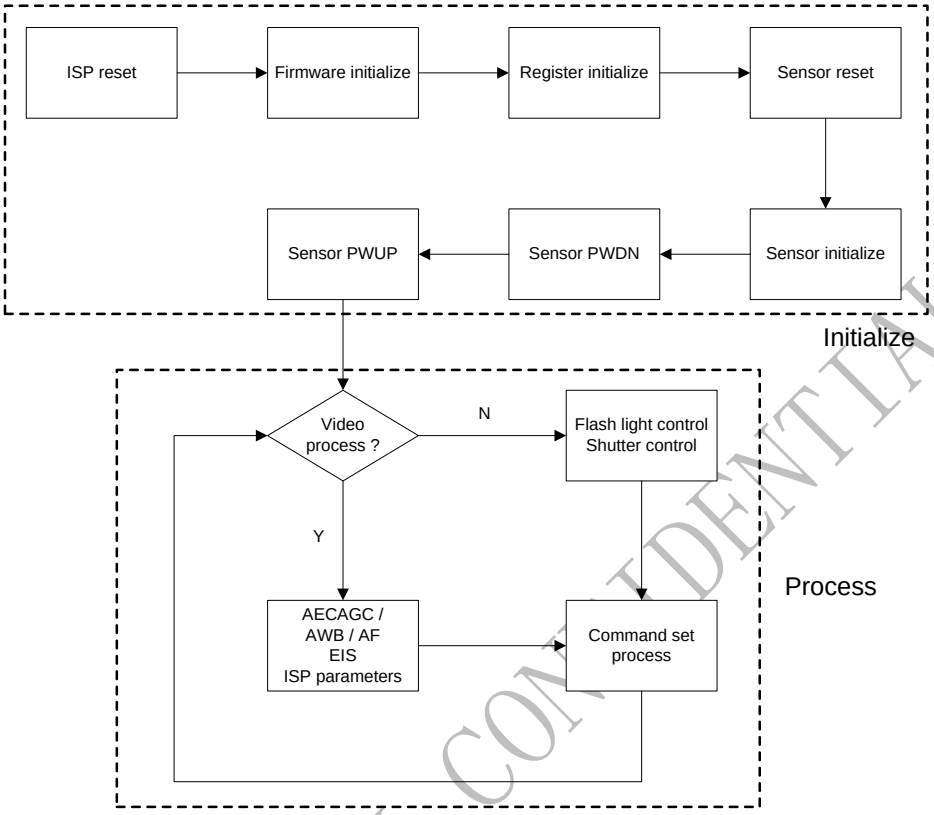

Figure 5-6 Firmware process flow

When ISP is reset, firmware initializes itself at first which includes enable instruction cache and data cache. Then firmware initializes registers for specific format and frame rate. After initializing ISP, firmware starts to control image sensors like as sensor reset, initialize, power down and power up.

After initializing, firmware works in process flow. Normally ISP is working in video process mode. In this mode, firmware needs to take care of exposure control, white balance gains control and other auto control parameters. When capturing a still image, ISP will work as still process mode. In this mode, firmware needs to calculate new exposure due to different format and frame rate and controls flash light and mechanical shutter.

PRELIMINARY CONFIDENTIAL

5.4 Image stabilization process flow

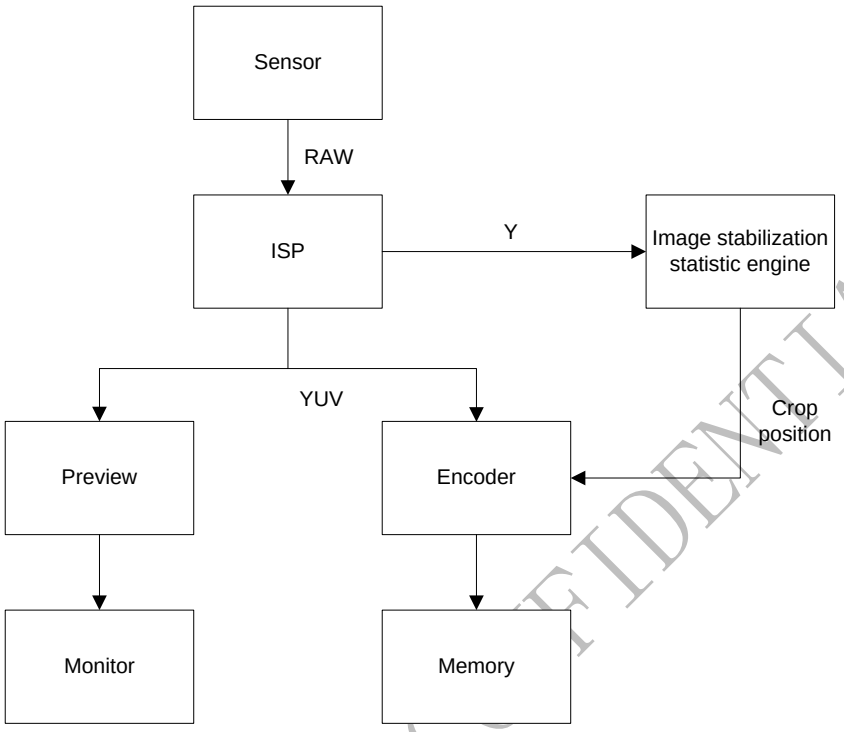

Figure 5-7 Image stabilization process flow

OVT ISP supports image stabilization statistics and calculates a vector for horizontal and vertical shifts. However ISP doesn't have frame buffer itself. So ISP can't crop output video to achieve fully image stabilization function. It needs support from other hardware like as an encoder.

PRELIMINARY CONFIDENTIAL

5.5 Auto focus process flow

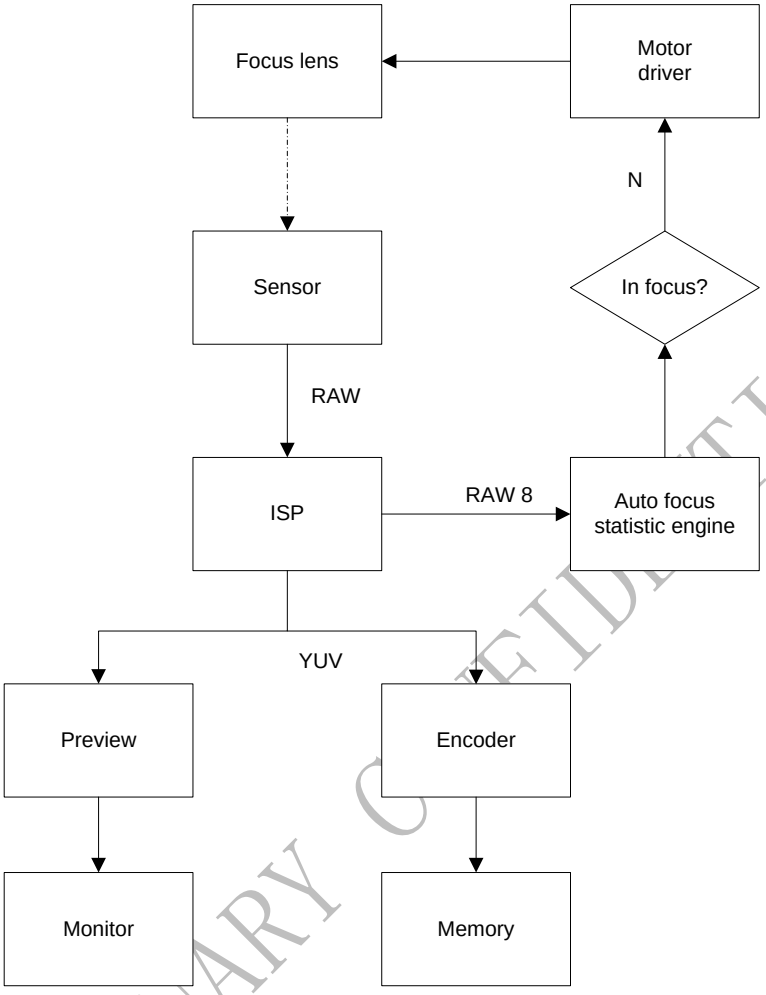

Figure 5-8 Auto focus process flow

Firmware supports auto focus function. It gets statistics value from sensor output RAW and analyzes its sharpness and sends out a position to drive lens motor.

PRELIMINARY CONFIDENTIAL

5.6 Command set

Description

There is a command set table (0x80063900~0x8006390f) in ISP. The first address (0x80063900) indicates command set ID and also is an interrupt trigger. Host can write this table to generate a command set to ISP. It is better to write command set ID at last because it will generate the interrupt.

Some command sets, like as setting sensor format, include a lot of parameters. 16 bytes addresses are not enough to buffer all of them. In this case, host should write parameters to specific buffer in ISP before generating a command set. There are two command set buffers. One is for I2C group write, address is 0x8001ea00~0x8001eeff (totally 1024 bytes). The other is for ISP register write, address is 0x8001e900~0x8001e9ff (totally 256 bytes).

ISP will send out a command set finish interrupt to Host when completing a command set. Host can read the status in specific registers (0x80063910~0x80063913) in ISP to know if the command set was finished correctly.

To see command set detail description, please refer to OVISP Software Manual.

PRELIMINARY CONFIDENTIAL

6 Register table

6.1 ISP TOP Register

Address	Register name	Default value	R/W	Descriptions
0x00065000	TOP0	8'h2f	RW	ISP block control 0 1 enable 0 disable [7] Post Binning Enable [6] RAW Scale Enable [5] Lens Shading Enable [4] reserved [3] RAW Stretch Enable [2] White Pixel Canceling Enable [1] Black Pixel Canceling Enable [0] AWB Gain Enable
0x00065001	TOP1	8'h2f	RW	ISP block control 1 1 enable 0 disable [7] Dark Boost Enable [6] Logyst Enable [5] Global Gamma Enable [4] HDR Combine Enable [3] Linear to Log/Log to Linear Enable [2] CCM Enable [1] Color Interpolation Enable [0] DNS Enable (Noise canceling)
0x00065002	TOP2	8'h90	RW	ISP block control 2 1 enable 0 disable [7] ISP Enable [6] YUV to RGB Enable [5] Scale Up Enable [4] UV Denoise Enable [3] Scale Down Enable/YUV DCW Enable [2] Special Digital Effect Enable [1] Tone Mapping Enable [0] Normalize Enable
0x00065003	TOP3	8'hff	RW	ISP block control 3 1 enable

PRELIMINARY CONFIDENTIAL

Address	Register name	Default value	R/W	Descriptions
				0 disable [7] High Level Enable [6] Low Level Enable [5] Anti Shake Stat Enable [4] Auto Focus Stat Enable [3] AEC Stat Enable [2] Simple AWB Stat Enable [1] Advanced AWB Stat Enable [0] reserved
0x00065004	TOP4	8'h20	RW	[7] binning mode [6] black & white enable [5] RGB Gamma enable [4] Depress enable [3:2] Combine Mode (HDR) 0 – Combine 1 – Long 2 - Short [1:0] ISP work mode 0 – Normal 1 – EDR 2 – HDR 3 - 3D
0x00065005	TOP5	8'h40	RW	[7] ISP RAW output Enable [6] RGB565 Dither [5] LS(Long/Short) order 0 – LSLS 1 – SLSL [4] CIP_Padding [3] SDE manual offset enable [2:0] Stat Done select 0 – All 1 – Combine done 2 – tone mapping done 3 – No done signal
0x00065006	TOP6	8'h02	RW	[7:6] sensor y skip [5:4] sensor x skip [3] sensor flip enable [2] sensor mirror enable [1:0] pixel order

PRELIMINARY CONFIDENTIAL

Address	Register name	Default value	R/W	Descriptions
				00 - GR/BG 01 - RG/GB 10 - BG/GR 11 - GB/RG
0x00065007	TOP7	8'h00	RW	[7] yuv444 to 422 drop [6] yuv444 to 422 vfirst [5] Test pattern enable [4] Test pattern, rolling bar [3:2] Color Bar Style [1] ISP Test [0] ISP Test, random image same
0x00065008	TOP8	8'h00	RW	[7:4] reserved [3:0] line INT number [11:8]
0x00065009	TOP9	8'h01	RW	[7:0] line INT number [7:0]
0x0006500a	TOP10	8'h00	RW	[7:4] ISP Test, random image seed [3] ISP Test, black white square [2] ISP Test, transparent [1:0] ISP Test, pattern select
0x0006500b	TOP11	8'h20	RW	[7:6] reserved [5] dummy line auto enable [4:0] manual dummy line number
0x0006500c	TOP12	8'h00	RW	[7:3] reserved [1:0] BLC target 0 [9:8]
0x0006500d	TOP13	8'h40	RW	[7:0] BLC target 0 [7:0]
0x0006500e	TOP14	8'h00	RW	[7:3] reserved [1:0] BLC target 1 [9:8]
0x0006500f	TOP15	8'h40	RW	[7:0] BLC target 1 [7:0]
0x00065010	TOP16	8'h14	RW	[7:5] reserved [4:0] ISP horizontal input size [12:8]
0x00065011	TOP17	8'h30	RW	[7:0] ISP horizontal input size [7:0]
0x00065012	TOP18	8'h0f	RW	[7:4] reserved [3:0] ISP vertical input size [11:8]
0x00065013	TOP19	8'h20	RW	[7:0] ISP vertical input size [7:0]
0x00065014	TOP20	8'h14	RW	[7:5] reserved

PRELIMINARY CONFIDENTIAL

Address	Register name	Default value	R/W	Descriptions
				[4:0] Scale horizontal output size [12:8]
0x00065015	TOP21	8'h30	RW	[7:0] Scale horizontal output size [7:0]
0x00065016	TOP22	8'h0f	RW	[7:4] reserved [3:0] Scale vertical output size [11:8]
0x00065017	TOP23	8'h20	RW	[7:0] Scale vertical output size [7:0]
0x00065018	TOP24	8'h00	RW	[7:5] reserved [4:0] LENC horizontal offset 1 [12:8]
0x00065019	TOP25	8'h00	RW	[7:0] LENC horizontal offset 1 [7:0]
0x0006501a	TOP26	8'h00	RW	[7:4] reserved [3:0] LENC vertical offset 1 [11:8]
0x0006501b	TOP27	8'h00	RW	[7:0] LENC vertical offset 1 [7:0]
0x0006501c	TOP28	8'h00	RW	[7:5] reserved [4:0] LENC horizontal offset 2 [12:8]
0x0006501d	TOP29	8'h00	RW	[7:0] LENC horizontal offset 2 [7:0]
0x0006501e	TOP30	8'h00	RW	[7:4] reserved [3:0] LENC vertical offset 2 [11:8]
0x0006501f	TOP31	8'h00	RW	[7:0] LENC vertical offset 2 [7:0]
0x00065020	TOP32	8'h10	RW	[7:0] RAW stretch Target[7:0]
0x00065021	TOP33	8'hff	RW	Cen_Global [7] anti shake [6] lenc online [5] tone mapping [4] RAW Scale [3] AFC [2] AWB [1] UV_DNS [0] OVPB31
0x00065022	TOP34	8'h00	RW	WB buffer access [7] AFC [6] Anti Shake [5] UV_DNS [4] Scale [3] Tone Mapping [2] OVPB31

PRELIMINARY CONFIDENTIAL

Address	Register name	Default value	R/W	Descriptions
				[1] LENC Online [0] RAW Scale
0x00065023	TOP35	8'h00	RW	[7:6] YUV DCW Shift horizontal [5] YUV16 out [4] rgb565, br swap [3] WB buffer access, AEC [2] WB buffer access, AWB [1:0] YUV DCW Shift vertical
0x00065024	SCALE0	8'h80	RW	[7:0] Scale Down xscale[7:0]
0x00065025	SCALE1	8'h80	RW	[7:0] Scale Down yscale[7:0]
0x00065026	SCALE2	8'h01	RW	[7:1] reserved [0] Scale Up yscale[8]
0x00065027	SCALE3	8'h00	RW	[7:0] Scale Up yscale[7:0]
0x00065028	SCALE4	8'h01	RW	[7:1] reserved [0] Scale Up xscale[8]
0x00065029	SCALE5	8'h00	RW	[7:0] Scale Up xscale[7:0]
0x0006502a	SCALE6	8'h0a	RW	[7:6] line counter select for RISC read [5] AFC input select [4] Anti Shake input select [3:2] r_size_x (Anti_Shake) [1:0] r_size_y (Anti_Shake)
0x0006502b	SCALE7	8'h1e	RW	[7:0] early lines (Anti Shake)
0x0006502c	SCALE8	8'h00	RW	[7:5] reserved [4:0] Scale Up, xcnt_init[12:8]
0x0006502d	SCALE9	8'h00	RW	[7:0] Scale Up, xcnt_init[7:0]
0x0006502e	SCALE10	8'h32	RW	[7:0] Scale Up, cnt_init[7:0]
0x0006502f	TOP36	8'h00	RW	[7:6] reserved [5:4] YUV422 input format 00:YUYV 01:YVYU 10:UYVY 11:VYUY [3:1] reserved [0] anti shake short select
0x00065030	TOP37	8'h00	RW	[7:5] RGB565 dither, th_r[2:0] [4:3] RGB565 dither, th_g[1:0] [2:0] RGB565 dither, th_b[2:0]

PRELIMINARY CONFIDENTIAL

Address	Register name	Default value	R/W	Descriptions
0x00065031	ANTI	8'h46	RW	[7] small md [6] bicube enable [5:0] Block Size
0x00065032	SCALE11	8'h14	RW	[7:5] reserved [4:0] Scale_Down horizontal output size [12:8]
0x00065033	SCALE12	8'h30	RW	[7:0] Scale_Down horizontal output size [7:0]
0x00065034	SCALE13	8'h0f	RW	[7:4] reserved [3:0] Scale_Down vertical output size [11:8]
0x00065035	SCALE14	8'h20	RW	[7:0] Scale_Down vertical output size [7:0]
0x00065036	Top38	NA	RO	Line number
0x00065037	TOP39	NA	RO	[7:5] reserved [4:0] ISP Input Pixel Counter[12:8]
0x00065038	TOP40	NA	RO	[7:0] ISP Input Pixel Counter[7:0]
0x00065039	TOP41	NA	RO	[7:4] reserved [3:0] ISP Input Line Counter[11:8]
0x0006503a	TOP42	NA	RO	[7:0] ISP Input Line Counter[7:0]
0x0006503b	TOP43	NA	RO	[7:0] ISP Input Href Low Clk Numbers [15:8]
0x0006503c	TOP44	NA	RO	[7:0] ISP I nput Href Low Clk Numbers [7:0]
0x0006503d	TOP45	NA	RO	[7:0] ISP Input Href Clk Numbers [15:8]
0x0006503e	TOP46	NA	RO	[7:0] ISP Input Href Clk Numbers [7:0]
0x0006503f	TOP47	NA	RO	[7:4] reserved [3:1] Clock Ratio (Href/Href Low) [0] Dummy_Error

PRELIMINARY CONFIDENTIAL

6.2 ISP TOP Register (MCU)

Address	Register name	Default value	R/W	Descriptions
0x00066a60	Ctrl0	NA	RO	[7:6] ISP work mode [5:4] Combine mode [3] Dark boost enable [2] High level depress

Address	Register name	Default value	R/W	Descriptions
				[1] Compensation enable [0] RGB Gamma enable
0x00066a61	Ctrl1	NA	RO	[7:0] Target Offset
0x00066a62	Ctrl2	NA	RO	[0] awb manual enable
0x00066a4c	Anti1	NA	RO	[6:0] Curr gmv x
0x00066a4d	Anti2	NA	RO	[6:0] Curr gmv y
0x00066ca4	Stretch1	8'h02	RW	[1:0] digital gain 0 [9:8] (m_nGain long)
0x00066ca5	Stretch2	8'h00	RW	[7:0] digital gain 0 [7:0] (m_nGain long)
0x00066ca6	Stretch3	8'h02	RW	[1:0] digital gain 1 [9:8] (m_nGain short)
0x00066ca7	Stretch4	8'h00	RW	[7:0] digital gain 1 [7:0] (m_nGain short)

6.3 Binning Register

Address	Register name	Default value	R/W	Descriptions
0x00065080	bin_ctrl00	5'h00	RW	[7:5] Reserverd [4] bypass raw binning [3] man_en_long [2] man_en_short [1:0] dcw_scale_shift (RAW_SCale)
0x00065081	bin_ctrl01	8'h00	RW	[7:4] Sign of 4 column filter coefficients (Long Exp) [3:0] Sign of 4 column filter coefficients (Short Exp)
0x00065082	bin_ctrl02	6'h23	RW	[7:6] reserved [5:4] first row number of output BG Rows [3] reserved [2:0] first row number of output GR Rows
0x00065083	bin_ctrl03	7'h22	RW	[7] reserved [6:4] step between two output rows [3:2] reserved [1:0] shift number of row calculation
0x00065084	bin_ctrl04	8'h40	RW	[7:4] Filter coefficient 0 of BG Row [3] reserved [2:0] Filter coefficient 1 of BG Row

PRELIMINARY CONFIDENTIAL

Address	Register name	Default value	R/W	Descriptions
0x00065085	bin_ctrl05	7'h31	RW	[7] reserved [6:4] Filter coefficient 0 of GR Row [3:0] Filter coefficient 1 of GR Row
0x00065086	bin_ctrl06	7'h23	RW	Long: [7] reserved [6:4] first column number of output B columns(Long Exp) [3:0] first column number of output R columns(Long Exp)
0x00065087	bin_ctrl07	8'h52	RW	Long: [7] Enable column filter with two coefficients [6:4] shift number of column calculation [3:0] step between two output columns
0x00065088	bin_ctrl08	5'h03	RW	Long: [7:3] reserved [2:0] Filter coefficient 0 of B column
0x00065089	bin_ctrl09	8'h13	RW	Long: [7:0] Filter coefficient 1 of B column
0x0006508a	bin_ctrl0a	7'h09	RW	Long: [7] reserved [6:0] Filter coefficient 2 of B column
0x0006508b	bin_ctrl0b	4'h01	RW	Long: [7:3] reserved [3:0] Filter coefficient 3 of B column
0x0006508c	bin_ctrl0c	4'h01	RW	Long: [7:4] reserved [3:0] Filter coefficient 0 of R column
0x0006508d	bin_ctrl0d	7'h09	RW	Long: [7] reserved [6:0] Filter coefficient 1 of R column
0x0006508e	bin_ctrl0e	8'h13	RW	Long: [7:0] Filter coefficient 2 of R column
0x0006508f	bin_ctrl0f	3'h03	RW	Long: [7:3] reserved [2:0] Filter coefficient 3 of R column
0x00065090	bin_ctrl10	7'h23	RW	Short: [7] reserved

PRELIMINARY CONFIDENTIAL

Address	Register name	Default value	R/W	Descriptions
				[6:4] first column number of output B columns [3:0] first column number of output R columns
0x00065091	bin_ctrl11	8'h52	RW	Short: [7] Enable column filter with two coefficients [6:4] shift number of column calculation [3:0] step between two output columns
0x00065092	bin_ctrl12	3'h03	RW	Short: [7:3] reserved [2:0] Filter coefficient 0 of B column
0x00065093	bin_ctrl13	8'h13	RW	Short: [7:0] Filter coefficient 1 of B column
0x00065094	bin_ctrl14	7'h09	RW	Short: [7] reserved [6:0] Filter coefficient 2 of B column
0x00065095	bin_ctrl15	4'h01	RW	Short: [7:3] reserved [3:0] Filter coefficient 3 of B column
0x00065096	bin_ctrl16	4'h01	RW	Short: [7:4] reserved [3:0] Filter coefficient 0 of R column
0x00065097	bin_ctrl17	7'h09	RW	Short: [7] reserved [6:0] Filter coefficient 1 of R column
0x00065098	bin_ctrl18	8'h13	RW	Short: [7:0] Filter coefficient 2 of R column
0x00065099	bin_ctrl19	3'h03	RW	Short: [7:3] reserved [2:0] Filter coefficient 3 of R column

PRELIMINARY CONFIDENTIAL

6.4 LENC Register

Address	Register name	Default value	R/W	Descriptions
0x00065100	lenc_00	8'h03	RW	Long: [7:3] reserved

Address	Register name	Default value	R/W	Descriptions
				[2] Random bits enable [1] add blc enable 1 enable 0 disable [0] blc enable 1 enable 0 disable
0x00065101	lenc_01	8'h03	RW	Short: [7:2] reserved [1] add blc enable (RTL only) 1 enable 0 disable [0] blc enable (RTL only) 1 enable 0 disable
0x00065102	lenc_02	8'h02	RW	[7:0] m_nBRHScale high byte (bit15~bit8)
0x00065103	lenc_03	8'h60	RW	[7:0] m_nBRHScale low byte (bit7~bit0)
0x00065104	lenc_04	8'h03	RW	[7:0] m_nBRVScale high byte (bit15~bit8)
0x00065105	lenc_05	8'h2c	RW	[7:0] m_nBRVScale low byte (bit7~bit0)
0x00065106	lenc_06	8'h03	RW	[7:0] m_nGHScale high byte (bit15~bit8)
0x00065107	lenc_07	8'h29	RW	[7:0] m_nGHScale low byte (bit7~bit0)
0x00065108	lenc_08	8'h02	RW	[7:0] m_nGVScale high byte (bit15~bit8)
0x00065109	lenc_09	8'h1d	RW	[7:0] m_nGVScale low byte (bit7~bit0)
0x0006510a	lenc_0a	8'h00	RO	Long: [7:5] reserved [4:0] m_nLeft high byte (bit12~bit8)
0x0006510b	lenc_0b	8'h00	RO	Long: [7:0] m_nLeft low byte (bit7~bit0)
0x0006510c	lenc_0c	8'h00	RO	Long: [7:4] reserved [3:0] m_nTop high byte (bit11~bit8)
0x0006510d	lenc_0d	8'h00	RO	long: [7:0] m_nTop low byte (bit7~bit0)
0x0006510e	lenc_0e	8'h00	RO	Long:

PRELIMINARY CONFIDENTIAL

Address	Register name	Default value	R/W	Descriptions
				[7:4] reserved [3:2] m_nVSkip [1:0] m_nHSkip
0x0006510f	lenc_0f	8'h00	RO	Long: [7:4] reserved [3] m_nGHPos overflow flag (RTL Only) 1 enable 0 disable [2] m_nBRHPos overflow flag (RTL Only) 1 enable 0 disable [1] m_nGVPos overflow flag (RTL Only) 1 enable 0 disable [0] m_nBRVPos overflow flag (RTL Only) 1 enable 0 disable
0x00065110	lenc_10	8'h00	RO	Short: [7:5] reserved [4:0] m_nLeft high byte (bit12~bit8)
0x00065111	lenc_11	8'h00	RO	Short: [7:0] m_nLeft low byte (bit7~bit0)
0x00065112	lenc_12	8'h00	RO	Short: [7:4] reserved [3:0] m_nTop high byte (bit11~bit8)
0x00065113	lenc_13	8'h00	RO	Short: [7:0] m_nTop low byte (bit7~bit0)
0x00065114	lenc_14	8'h00	RO	Short: [7:4] reserved [3:2] m_nVSkip [1:0] m_nHSkip
0x00065115	lenc_15	8'h00	RO	Short: [7:4] reserved [3] m_nGHPos overflow flag (RTL Only) 1 enable 0 disable [2] m_nBRHPos overflow flag (RTL Only)

PRELIMINARY CONFIDENTIAL

Address	Register name	Default value	R/W	Descriptions
				1 enable 0 disable [1] m_nGVPos overflow flag (RTL Only) 1 enable 0 disable [0] m_nBRVPos overflow flag (RTL Only) 1 enable 0 disable
0x00065116	lenc_16	8'h00	RO	[7:5] reserved [2] non hdr input (RTL Only) [1] m_bFlip [0] m_bMirror

6.5 LENC Register (MCU)

Address	Register name	Default value	R/W	Descriptions
0x00066c04	lenc_g00_l	8'h10	RW	Long: G Matrix [0][0]
0x00066c05	lenc_g01_l	8'h10	RW	Long: G Matrix [0][1]
0x00066c06	lenc_g02_l	8'h10	RW	Long: G Matrix [0][2]
0x00066c07	lenc_g03_l	8'h10	RW	Long: G Matrix [0][3]
0x00066c08	lenc_g04_l	8'h10	RW	Long: G Matrix [0][4]
0x00066c09	lenc_g05_l	8'h10	RW	Long: G Matrix [0][5]
0x00066c0a	lenc_g10_l	8'h10	RW	Long: G Matrix [1][0]
0x00066c0b	lenc_g11_l	8'h08	RW	Long: G Matrix [1][1]
0x00066c0c	lenc_g12_l	8'h08	RW	Long: G Matrix [1][2]
0x00066c0d	lenc_g13_l	8'h08	RW	Long: G Matrix [1][3]
0x00066c0e	lenc_g14_l	8'h08	RW	Long: G Matrix [1][4]
0x00066c0f	lenc_g15_l	8'h10	RW	Long: G Matrix [1][5]
0x00066c10	lenc_g20_l	8'h10	RW	Long: G Matrix [2][0]
0x00066c11	lenc_g21_l	8'h08	RW	Long: G Matrix [2][1]
0x00066c12	lenc_g22_l	8'h00	RW	Long: G Matrix [2][2]

PRELIMINARY CONFIDENTIAL

Address	Register name	Default value	R/W	Descriptions
0x00066c13	lenc_g23_l	8'h00	RW	Long: G Matrix [2][3]
0x00066c14	lenc_g24_l	8'h08	RW	Long: G Matrix [2][4]
0x00066c15	lenc_g25_l	8'h10	RW	Long: G Matrix [2][5]
0x00066c16	lenc_g30_l	8'h10	RW	Long: G Matrix [3][0]
0x00066c17	lenc_g31_l	8'h08	RW	Long: G Matrix [3][1]
0x00066c18	lenc_g32_l	8'h00	RW	Long: G Matrix [3][2]
0x00066c19	lenc_g33_l	8'h00	RW	Long: G Matrix [3][3]
0x00066c1a	lenc_g34_l	8'h08	RW	Long: G Matrix [3][4]
0x00066c1b	lenc_g35_l	8'h10	RW	Long: G Matrix [3][5]
0x00066c1c	lenc_g40_l	8'h10	RW	Long: G Matrix [4][0]
0x00066c1d	lenc_g41_l	8'h08	RW	Long: G Matrix [4][1]
0x00066c1e	lenc_g42_l	8'h08	RW	Long: G Matrix [4][2]
0x00066c1f	lenc_g43_l	8'h08	RW	Long: G Matrix [4][3]
0x00066c20	lenc_g44_l	8'h08	RW	Long: G Matrix [4][4]
0x00066c21	lenc_g45_l	8'h10	RW	Long: G Matrix [4][5]
0x00066c22	lenc_g50_l	8'h10	RW	Long: G Matrix [5][0]
0x00066c23	lenc_g51_l	8'h10	RW	Long: G Matrix [5][1]
0x00066c24	lenc_g52_l	8'h10	RW	Long: G Matrix [5][2]
0x00066c25	lenc_g53_l	8'h10	RW	Long: G Matrix [5][3]
0x00066c26	lenc_g54_l	8'h10	RW	Long: G Matrix [5][4]
0x00066c27	lenc_g55_l	8'h10	RW	Long: G Matrix [5][5]
0x00066c28	lenc_br00_l	8'haa	RW	Long: [7:4] B Matrix[0][0] [3:0] R Matrix[0][0]
0x00066c29	lenc_br01_l	8'haa	RW	Long: [7:4] B Matrix[0][1] [3:0] R Matrix[0][1]
0x00066c2a	lenc_br02_l	8'haa	RW	Long: [7:4] B Matrix[0][2] [3:0] R Matrix[0][2]

PRELIMINARY CONFIDENTIAL

Address	Register name	Default value	R/W	Descriptions
0x00066c2b	lenc_br03_l	8'haa	RW	Long: [7:4] B Matrix[0][3] [3:0] R Matrix[0][3]
0x00066c2c	lenc_br04_l	8'haa	RW	Long: [7:4] B Matrix[0][4] [3:0] R Matrix[0][4]
0x00066c2d	lenc_br10_l	8'haa	RW	Long: [7:4] B Matrix[1][0] [3:0] R Matrix[1][0]
0x00066c2e	lenc_br11_l	8'h99	RW	Long: [7:4] B Matrix[1][1] [3:0] R Matrix[1][1]
0x00066c2f	lenc_br12_l	8'h99	RW	Long: [7:4] B Matrix[1][2] [3:0] R Matrix[1][2]
0x00066c30	lenc_br13_l	8'h99	RW	Long: [7:4] B Matrix[1][3] [3:0] R Matrix[1][3]
0x00066c31	lenc_br14_l	8'haa	RW	Long: [7:4] B Matrix[1][4] [3:0] R Matrix[1][4]
0x00066c32	lenc_br20_l	8'haa	RW	Long: [7:4] B Matrix[2][0] [3:0] R Matrix[2][0]
0x00066c33	lenc_br21_l	8'h99	RW	Long: [7:4] B Matrix[2][1] [3:0] R Matrix[2][1]
0x00066c34	lenc_br22_l	8'h88	RW	Long: [7:4] B Matrix[2][2] [3:0] R Matrix[2][2]
0x00066c35	lenc_br23_l	8'h99	RW	Long: [7:4] B Matrix[2][3] [3:0] R Matrix[2][3]
0x00066c36	lenc_br24_l	8'haa	RW	Long: [7:4] B Matrix[2][4]

PRELIMINARY CONFIDENTIAL

Address	Register name	Default value	R/W	Descriptions
				[3:0] R Matrix[2][4]
0x00066c37	lenc_br30_l	8'haa	RW	Long: [7:4] B Matrix[3][0] [3:0] R Matrix[3][0]
0x00066c38	lenc_br31_l	8'h99	RW	Long: [7:4] B Matrix[3][1] [3:0] R Matrix[3][1]
0x00066c39	lenc_br32_l	8'h99	RW	Long: [7:4] B Matrix[3][2] [3:0] R Matrix[3][2]
0x00066c3a	lenc_br33_l	8'h99	RW	Long: [7:4] B Matrix[3][3] [3:0] R Matrix[3][3]
0x00066c3b	lenc_br34_l	8'haa	RW	Long: [7:4] B Matrix[3][4] [3:0] R Matrix[3][4]
0x00066c3c	lenc_br40_l	8'haa	RW	Long: [7:4] B Matrix[4][0] [3:0] R Matrix[4][0]
0x00066c3d	lenc_br41_l	8'haa	RW	Long: [7:4] B Matrix[4][1] [3:0] R Matrix[4][1]
0x00066c3e	lenc_br42_l	8'haa	RW	Long: [7:4] B Matrix[4][2] [3:0] R Matrix[4][2]
0x00066c3f	lenc_br43_l	8'haa	RW	Long: [7:4] B Matrix[4][3] [3:0] R Matrix[4][3]
0x00066c40	lenc_br44_l	8'haa	RW	Long: [7:4] B Matrix[4][4] [3:0] R Matrix[4][4]
0x00066c41	lenc_g00_s	8'h10	RW	Short: G Matrix [0][0]
0x00066c42	lenc_g01_s	8'h10	RW	Short: G Matrix [0][1]
0x00066c43	lenc_g02_s	8'h10	RW	Short: G Matrix [0][2]

PRELIMINARY CONFIDENTIAL

Address	Register name	Default value	R/W	Descriptions
0x00066c44	lenc_g03_s	8'h10	RW	Short: G Matrix [0][3]
0x00066c45	lenc_g04_s	8'h10	RW	Short: G Matrix [0][4]
0x00066c46	lenc_g05_s	8'h10	RW	Short: G Matrix [0][5]
0x00066c47	lenc_g10_s	8'h10	RW	Short: G Matrix [1][0]
0x00066c48	lenc_g11_s	8'h08	RW	Short: G Matrix [1][1]
0x00066c49	lenc_g12_s	8'h08	RW	Short: G Matrix [1][2]
0x00066c4a	lenc_g13_s	8'h08	RW	Short: G Matrix [1][3]
0x00066c4b	lenc_g14_s	8'h08	RW	Short: G Matrix [1][4]
0x00066c4c	lenc_g15_s	8'h10	RW	Short: G Matrix [1][5]
0x00066c4d	lenc_g20_s	8'h10	RW	Short: G Matrix [2][0]
0x00066c4e	lenc_g21_s	8'h08	RW	Short: G Matrix [2][1]
0x00066c4f	lenc_g22_s	8'h00	RW	Short: G Matrix [2][2]
0x00066c50	lenc_g23_s	8'h00	RW	Short: G Matrix [2][3]
0x00066c51	lenc_g24_s	8'h08	RW	Short: G Matrix [2][4]
0x00066c52	lenc_g25_s	8'h10	RW	Short: G Matrix [2][5]
0x00066c53	lenc_g30_s	8'h10	RW	Short: G Matrix [3][0]
0x00066c54	lenc_g31_s	8'h08	RW	Short: G Matrix [3][1]
0x00066c55	lenc_g32_s	8'h00	RW	Short: G Matrix [3][2]
0x00066c56	lenc_g33_s	8'h00	RW	Short: G Matrix [3][3]
0x00066c57	lenc_g34_s	8'h08	RW	Short: G Matrix [3][4]
0x00066c58	lenc_g35_s	8'h10	RW	Short: G Matrix [3][5]
0x00066c59	lenc_g40_s	8'h10	RW	Short: G Matrix [4][0]
0x00066c5a	lenc_g41_s	8'h08	RW	Short: G Matrix [4][1]
0x00066c5b	lenc_g42_s	8'h08	RW	Short: G Matrix [4][2]
0x00066c5c	lenc_g43_s	8'h08	RW	Short: G Matrix [4][3]
0x00066c5d	lenc_g44_s	8'h08	RW	Short: G Matrix [4][4]
0x00066c5e	lenc_g45_s	8'h10	RW	Short: G Matrix [4][5]
0x00066c5f	lenc_g50_s	8'h10	RW	Short: G Matrix [5][0]

PRELIMINARY CONFIDENTIAL

Address	Register name	Default value	R/W	Descriptions
0x00066c60	lenc_g51_s	8'h10	RW	Short: G Matrix [5][1]
0x00066c61	lenc_g52_s	8'h10	RW	Short: G Matrix [5][2]
0x00066c62	lenc_g53_s	8'h10	RW	Short: G Matrix [5][3]
0x00066c63	lenc_g54_s	8'h10	RW	Short: G Matrix [5][4]
0x00066c64	lenc_g55_s	8'h10	RW	Short: G Matrix [5][5]
0x00066c65	lenc_br00_s	8'haa	RW	Short: [7:4] B Matrix[0][0] [3:0] R Matrix[0][0]
0x00066c66	lenc_br01_s	8'haa	RW	Short: [7:4] B Matrix[0][1] [3:0] R Matrix[0][1]
0x00066c67	lenc_br02_s	8'haa	RW	Short: [7:4] B Matrix[0][2] [3:0] R Matrix[0][2]
0x00066c68	lenc_br03_s	8'haa	RW	Short: [7:4] B Matrix[0][3] [3:0] R Matrix[0][3]
0x00066c69	lenc_br04_s	8'haa	RW	Short: [7:4] B Matrix[0][4] [3:0] R Matrix[0][4]
0x00066c6a	lenc_br10_s	8'haa	RW	Short: [7:4] B Matrix[1][0] [3:0] R Matrix[1][0]
0x00066c6b	lenc_br11_s	8'h99	RW	Short: [7:4] B Matrix[1][1] [3:0] R Matrix[1][1]
0x00066c6c	lenc_br12_s	8'h99	RW	Short: [7:4] B Matrix[1][2] [3:0] R Matrix[1][2]
0x00066c6d	lenc_br13_s	8'h99	RW	Short: [7:4] B Matrix[1][3] [3:0] R Matrix[1][3]
0x00066c6e	lenc_br14_s	8'haa	RW	Short: [7:4] B Matrix[1][4]

PRELIMINARY CONFIDENTIAL

Address	Register name	Default value	R/W	Descriptions
				[3:0] R Matrix[1][4]
0x00066c6f	lenc_br20_s	8'haa	RW	Short: [7:4] B Matrix[2][0] [3:0] R Matrix[2][0]
0x00066c70	lenc_br21_s	8'h99	RW	Short: [7:4] B Matrix[2][1] [3:0] R Matrix[2][1]
0x00066c71	lenc_br22_s	8'h88	RW	Short: [7:4] B Matrix[2][2] [3:0] R Matrix[2][2]
0x00066c72	lenc_br23_s	8'h99	RW	Short: [7:4] B Matrix[2][3] [3:0] R Matrix[2][3]
0x00066c73	lenc_br24_s	8'haa	RW	Short: [7:4] B Matrix[2][4] [3:0] R Matrix[2][4]
0x00066c74	lenc_br30_s	8'haa	RW	Short: [7:4] B Matrix[3][0] [3:0] R Matrix[3][0]
0x00066c75	lenc_br31_s	8'h99	RW	Short: [7:4] B Matrix[3][1] [3:0] R Matrix[3][1]
0x00066c76	lenc_br32_s	8'h99	RW	Short: [7:4] B Matrix[3][2] [3:0] R Matrix[3][2]
0x00066c77	lenc_br33_s	8'h99	RW	Short: [7:4] B Matrix[3][3] [3:0] R Matrix[3][3]
0x00066c78	lenc_br34_s	8'haa	RW	Short: [7:4] B Matrix[3][4] [3:0] R Matrix[3][4]
0x00066c79	lenc_br40_s	8'haa	RW	Short: [7:4] B Matrix[4][0] [3:0] R Matrix[4][0]
0x00066c7a	lenc_br41_s	8'haa	RW	short:

PRELIMINARY CONFIDENTIAL

Address	Register name	Default value	R/W	Descriptions
				[7:4] B Matrix[4][1] [3:0] R Matrix[4][1]
0x00066c7b	lenc_br42_l	8'haa	RW	Short: [7:4] B Matrix[4][2] [3:0] R Matrix[4][2]
0x00066c7c	lenc_br43_l	8'haa	RW	Short: [7:4] B Matrix[4][3] [3:0] R Matrix[4][3]
0x00066c7d	lenc_br44_l	8'haa	RW	Short: [7:4] B Matrix[4][4] [3:0] R Matrix[4][4]
0x00066c7e	lenc_br_offset_l	8'h88	RW	Long: [7:4] B Offset [3:0] R Offset
0x00066c7f	lenc_br_offset_l	8'h88	RW	Short: [7:4] B Offset [3:0] R Offset
0x00066c80	lenc_m_nq_l	8'h40	RW	Long: [7:0] m_nQ
0x00066c81	lenc_m_nq_s	8'h40	RW	Short: [7:0] m_nQ

PRELIMINARY CONFIDENTIAL

6.6 AWB Gain Register

Address	Register name	Default value	R/W	Descriptions
0x00065300	AWB_00	2'h00	RW	Long: [7:2] reserved [1:0] Manual AWB_GAIN_B[9:8]
0x00065301	AWB_01	8'h80	RW	Long: [7:0] Manual AWB_GAIN_B[7:0]
0x00065302	AWB_02	2'h00	RW	Long: [7:2] reserved [1:0] Manual AWB_GAIN_GB[9:8]

Address	Register name	Default value	R/W	Descriptions
0x00065303	AWB_03	8'h80	RW	Long: [7:0] Manual AWB_GAIN_GB[7:0]
0x00065304	AWB_04	2'h00	RW	Long: [7:2] reserved [1:0] Manual AWB_GAIN_GR[9:8]
0x00065305	AWB_05	8'h80	RW	Long: [7:0] Manual AWB_GAIN_GR[7:0]
0x00065306	AWB_06	2'h00	RW	Long: [7:2] reserved [1:0] Manual AWB_GAIN_R[9:8]
0x00065307	AWB_07	8'h80	RW	Long: [7:0] Manual AWB_GAIN_R[7:0]
0x00065308	AWB_08	6'h00	RW	Long: [7:6] reserved [5:0] Manual AWBOFFSET_B[13:8] (2's complementary)
0x00065309	AWB_09	8'h00	RW	Long: [7:0] Manual AWBOFFSET_B[7:0] (2's complementary)
0x0006530a	AWB_10	6'h00	RW	Long: [7:6] reserved [5:0] Manual AWBOFFSET_GB[13:8], (2's complementary)
0x0006530b	AWB_11	8'h00	RW	Long: [7:0] Manual AWBOFFSET_GB[7:0] (2's complementary)
0x0006530c	AWB_12	6'h00	RW	Long: [7:6] reserved [5:0] Manual AWBOFFSET_GR[13:8] (2's complementary)
0x0006530d	AWB_13	8'h00	RW	Long: [7:0] Manual AWBOFFSET_GR[7:0] (2's complementary)
0x0006530e	AWB_14	6'h00	RW	Long: [7:6] reserved [5:0] Manual AWBOFFSET_R[13:8] (2's complementary)
0x0006530f	AWB_15	8'h00	RW	Long: [7:0] Manual AWBOFFSET_R[7:0] (2's complementary)

PRELIMINARY CONFIDENTIAL

Address	Register name	Default value	R/W	Descriptions
0x00065310	AWB_16	2'h00	RW	Short: [7:2] reserved [1:0] Manual AWB_GAIN_B[9:8]
0x00065311	AWB_17	8'h80	RW	Short: [7:0] Manual AWB_GAIN_B[7:0]
0x00065312	AWB_18	2'h00	RW	Short: [7:2] reserved [1:0] Manual AWB_GAIN_GB[9:8]
0x00065313	AWB_19	8'h80	RW	Short: [7:0] Manual AWB_GAIN_GB[7:0]
0x00065314	AWB_20	2'h00	RW	Short: [7:2] reserved [1:0] Manual AWB_GAIN_GR[9:8]
0x00065315	AWB_21	8'h80	RW	Short: [7:0] Manual AWB_GAIN_GR[7:0]
0x00065316	AWB_22	2'h00	RW	Short: [7:2] reserved [1:0] Manual AWB_GAIN_R[9:8]
0x00065317	AWB_23	8'h80	RW	Short: [7:0] Manual AWB_GAIN_R[7:0]
0x00065318	AWB_24	6'h00	RW	Short: [7:6] reserved [5:0] Manual Left_AWBOFFSET_B[13:8], complementary code
0x00065319	AWB_25	8'h00	RW	Short: [7:0] Manual AWBOFFSET_B[7:0] (2's complementary)
0x0006531a	AWB_26	6'h00	RW	Short: [7:6] reserved [5:0] Manual AWBOFFSET_GB[13:8] (2's complementary)
0x0006531b	AWB_27	8'h00	RW	Short: [7:0] Manual AWBOFFSET_GB[7:0] (2's complementary)
0x0006531c	AWB_28	6'h00	RW	Short: [7:6] reserved [5:0] Manual AWBOFFSET_GR[13:8] (2's

PRELIMINARY CONFIDENTIAL

Address	Register name	Default value	R/W	Descriptions
				complementary)
0x0006531d	AWB_29	8'h00	RW	Short: [7:0] Manual AWBOFFSET_GR[7:0] (2's complementary)
0x0006531e	AWB_30	6'h00	RW	Short: [7:6] reserved [5:0] Manual AWBOFFSET_R[13:8] (2's complementary)
0x0006531f	AWB_31	8'h00	RW	Short: [7:0] Manual AWBOFFSET_R[7:0] (2's complementary)
0x00065320	AWB_32	1'h00	RW	[7:1] reserved [0] AWB_GAIN_MAN_EN 1 for enable and 0 for disable

6.7 AWB Gain Register (MCU Write)

Address	Register name	Default value	R/W	Descriptions
0x00066c84	Gain00	8'h00	RW	[7:2] reserved [1:0] Auto AWB B Gain Long[9:8]
0x00066c85	Gain01	8'h80	RW	[7:0] Auto AWB B Gain Long[7:0]
0x00066c86	Gain02	8'h00	RW	[7:2] reserved [1:0] Auto AWB Gb Gain Long[9:8]
0x00066c87	Gain03	8'h80	RW	[7:0] Auto AWB Gb Gain Long[7:0]
0x00066c88	Gain04	8'h00	RW	[7:2] reserved [1:0] Auto AWB Gr Gain Long[9:8]
0x00066c89	Gain05	8'h80	RW	[7:0] Auto AWB Gr Gain Long[7:0]
0x00066c8a	Gain06	8'h00	RW	[7:2] reserved [1:0] Auto AWB R Gain Long[9:8]
0x00066c8b	Gain07	8'h80	RW	[7:0] Auto AWB R Gain Long[7:0]
0x00066c8c	Gain08	8'h00	RW	[7:2] reserved [1:0] Auto AWB B Gain Short[9:8]
0x00066c8d	Gain09	8'h80	RW	[7:0] Auto AWB B Gain Short[7:0]
0x00066c8e	Gain10	8'h00	RW	[7:2] reserved [1:0] Auto AWB Gb Gain Short[9:8]

PRELIMINARY & CONFIDENTIAL

Address	Register name	Default value	R/W	Descriptions
0x00066c8f	Gain11	8'h80	RW	[7:0] Auto AWB Gb Gain Short[7:0]
0x00066c90	Gain12	8'h00	RW	[7:2] reserved [1:0] Auto AWB Gr Gain Short[9:8]
0x00066c91	Gain13	8'h80	RW	[7:0] Auto AWB Gr Gain Short[7:0]
0x00066c92	Gain14	8'h00	RW	[7:2] reserved [1:0] Auto AWB R Gain Short[9:8]
0x00066c93	Gain15	8'h80	RW	[7:0] Auto AWB R Gain Short[7:0]
0x00066c94	Gain16	8'h00	RW	[7:6] reserved [5:0] Auto B offset Long[13:8]
0x00066c5	Gain17	8'h00	RW	[7:0] Auto B offset Long[7:0]
0x00066c96	Gain18	8'h00	RW	[7:6] reserved [5:0] Auto Gb offset Long[13:8]
0x00066c97	Gain19	8'h00	RW	[7:0] Auto Gb offset Long[7:0]
0x00066c98	Gain20	8'h00	RW	[7:6] reserved [5:0] Auto Gr offset Long[13:8]
0x00066c99	Gain21	8'h00	RW	[7:0] Auto Gr offset Long[7:0]
0x00066c9a	Gain22	8'h00	RW	[7:6] reserved [5:0] Auto R offset Long[13:8]
0x00066c9b	Gain23	8'h00	RW	[7:0] Auto R offset Long[7:0]
0x00066c9c	Gain24	8'h00	RW	[7:6] reserved [5:0] Auto B offset Short[13:8]
0x00066c9d	Gain25	8'h00	RW	[7:0] Auto B offset Short[7:0]
0x00066c9e	Gain26	8'h00	RW	[7:6] reserved [5:0] Auto Gb offset Short[13:8]
0x00066c9f	Gain27	8'h00	RW	[7:0] Auto Gb offset Short[7:0]
0x00066ca0	Gain28	8'h00	RW	[7:6] reserved [5:0] Auto Gr offset Short[13:8]
0x00066ca1	Gain29	8'h00	RW	[7:0] Auto Gr offset Short[7:0]
0x00066ca2	Gain30	8'h00	RW	[7:6] reserved [5:0] Auto R offset Short[13:8]
0x00066ca3	Gain31	8'h00	RW	[7:0] Auto R offset Short[7:0]

PRELIMINARY CONFIDENTIAL

6.8 DPC Register

Address	Register name	Default value	R/W	Descriptions
0x00065400	dpc_ctrl00	8'hfe	RW	Long: [7] tail_enable [6] sat_enable [5] cluster_enable [4] scon_enable : enable same channel detection [3] dcon_enable : enable different channel detection [2] smooth_enable : enable using average G values when doing recovery [1] r_vbp_en [0] man_mode_enable : enable the manual mode
0x00065401	dpc_ctrl01	8'h23	RW	Long: [7] 192p [6] h4reg [5] enable the color line [4:3] regcluster_en [2] enable the option of vertical disconnection [1:0] the option for padding the boundary pixel
0x00065402	dpc_ctrl02	8'h3	RW	Long: [7:2] reserved [1:0] vertical line number
0x00065403	dpc_ctrl03	8'h08	RW	Long: [7] reserved [6:0] wthre: Threshold value for detecting white pixel
0x00065404	dpc_ctrl04	8'h0c	RW	Long: [7] reserved [6:0] bthre: Threshold value for detecting black pixel
0x00065405	dpc_ctrl05	8'h10	RW	Long: [7] reserved [6:0] Thre1,used in recovery
0x00065406	dpc_ctrl06	8'h20	RW	Long: [7] reserved [6:0] Thre2,used in recovery
0x00065407	dpc_ctrl07	8'h04	RW	Long: [7:0] Thre3,used in checkbelow

PRELIMINARY CONFIDENTIAL

Address	Register name	Default value	R/W	Descriptions
0x00065408	dpc_ctrl08	8'h18	RW	Long: [7] reserved [6:0] Thre4,used in detection
0x00065409	dpc_ctrl09	8'h08	RW	Long: [7] reserved [6:0] wthre_list0, used for wthre calculation in auto-mode
0x0006540a	dpc_ctrl0a	8'h08	RW	Long: [7] reserved [6:0] wthre_list1, used for wthre calculation in auto-mode
0x0006540b	dpc_ctrl0b	8'h08	RW	Long: [7] reserved [6:0] wthre_list2, used for wthre calculation in auto-mode
0x0006540c	dpc_ctrl0c	8'h08	RW	Long: [7] reserved [6:0] wthre_list3, used for wthre calculation in auto-mode
0x0006540d	dpc_ctrl0d	8'h0c	RW	Long: [7] reserved [6:0] bthre_list0, used for bthre calcluation in auto-mode
0x0006540e	dpc_ctrl0e	8'h08	RW	Long: [7] reserved [6:0] bthre_list1, used for bthre calcluation in auto-mode
0x0006540f	dpc_ctrl0f	8'h08	RW	Long: [7] reserved [6:0] bthre_list2, used for bthre calcluation in auto-mode
0x00065410	dpc_ctrl10	8'h08	RW	Long: [7] reserved [6:0] bthre_list3, used for bthre calcluation in auto-mode
0x00065411	dpc_ctrl11	8'hff	RW	Long: [7:0] Sat parameter
0x00065412	dpc_ctrl12	8'h03	RW	Long: [7] reserved [6:0] threlist0 of smooth
0x00065413	dpc_ctrl13	8'h07	RW	Long: [7] reserved [6:0] threlist1 of smooth

PRELIMINARY CONFIDENTIAL

Address	Register name	Default value	R/W	Descriptions
0x00065414	dpc_ctrl14	8'h0f	RW	Long: [7] reserved [6:0] threlist2 of smooth
0x00065415	dpc_ctrl15	8'hfe	RW	Short: [7] tail_enable [6] sat_enable [5] cluster_enable [4] scon_enable : enable same channel detection [3] dcon_enable : enable different channel detection [2] smooth_enable : enable using average G values when doing recovery [1] vbp_enable [0] man_mode_enable : enable the manual mode
0x00065416	dpc_ctrl16	8'h23	RW	Short: [7] copytest [6] h4reg [5] enable the option for the color line [4:3] enable the option for regcluster [2] enable the option for the vertical disconnection [1:0] the option for padding the boundary pixel
0x00065417	dpc_ctrl17	8'h03	RW	Short: [7:2] reserved [1:0] vertical line number
0x00065418	dpc_ctrl18	8'h08	RW	Short: [7] reserved [6:0] wthre: Threshold value for detecting white pixel
0x00065419	dpc_ctrl19	8'h0c	RW	Short: [7] reserved [6:0] bthre: Threshold value for detecting black pixel
0x0006541a	dpc_ctrl1a	8'h10	RW	Short: [7] reserved [6:0] Thre1,used in recovery
0x0006541b	dpc_ctrl1b	8'h20	RW	Short: [7] reserved [6:0] Thre2,used in recovery
0x0006541c	dpc_ctrl1c	8'h04	RW	Short: [7:0] Thre3,used in checkbelow

PRELIMINARY CONFIDENTIAL

Address	Register name	Default value	R/W	Descriptions
0x0006541d	dpc_ctrl1d	8'h18	RW	Short: [7] reserved [6:0] Thre4,used in detection
0x0006541e	dpc_ctrl1e	8'h08	RW	Short: [7] reserved [6:0] wthre_list0, used for wthre calculation in auto-mode
0x0006541f	dpc_ctrl1f	8'h08	RW	Short: [7] reserved [6:0] wthre_list1, used for wthre calculation in auto-mode
0x00065420	dpc_ctrl20	8'h08	RW	Short: [7] reserved [6:0] wthre_list2, used for wthre calculation in auto-mode
0x00065421	dpc_ctrl21	8'h08	RW	Short: [7] reserved [6:0] wthre_list3, used for wthre calculation in auto-mode
0x00065422	dpc_ctrl22	8'h0c	RW	Short: [7] reserved [6:0] bthre_list0, used for bthre calcluation in auto-mode
0x00065423	dpc_ctrl23	8'h08	RW	Short: [7] reserved [6:0] bthre_list1, used for bthre calcluation in auto-mode
0x00065424	dpc_ctrl24	8'h08	RW	Short: [7] reserved [6:0] bthre_list2, used for bthre calcluation in auto-mode
0x00065425	dpc_ctrl25	8'h08	RW	Short: [7] reserved [6:0] bthre_list3, used for bthre calcluation in auto-mode
0x00065426	dpc_ctrl26	8'hff	RW	Short: [7:0] Sat parameter
0x00065427	dpc_ctrl27	8'h03	RW	Short: [7] reserved [6:0] threlist0 of smooth
0x00065428	dpc_ctrl28	8'h07	RW	Short: [7] reserved [6:0] threlist1 of smooth

PRELIMINARY CONFIDENTIAL

Address	Register name	Default value	R/W	Descriptions
0x00065429	dpc_ctrl29	8'h0f	RW	Short: [7] reserved [6:0] threlist2 of smooth
0x00065430	dpc_ctrl2a	8'h7f	RW	[7] replace [6:0] pattern
0x00065431	dpc_ctrl2b	8'h04	RW	long [7:0] int_max
0x00065432	dpc_ctrl2c	8'h04	RW	short [7:0] int_max
0x00065433	dpc_ctrl2d		RO	[7:0] int_adr_0
0x00065434	dpc_ctrl2e		RO	[7:0] int_adr_1
0x00065446	dpc_ctrl40			Debug for long channel: [7] enable the option for the vertical disconnection [6] enable the option for the save channel [5] enbale the option for the different channel [4:3] enable the option for the regcluster [2] enable the option for the vbp [1] enable the option for the color line [0] enable the option for the smooth
0x00065447	dpc_ctrl41			Debug for long channel: [7] reserved [6:0] threshold for white pixel
0x00065448	dpc_ctrl42			Debug for long channel: [7] reserved [6:0] threshold for black pixel
0x00065449	dpc_ctrl43			Debug for long channel: [7] reserved [6:0] threshold1
0x0006544a	dpc_ctrl44			Debug for long channel: [7:0] threshold2
0x0006544b	dpc_ctrl45		RO	Debug for long channel [7:0] threshold3
0x0006544c	dpc_ctrl46		RO	Debug for long channel [7] reserved [6:0] threshold4

PRELIMINARY CONFIDENTIAL

Address	Register name	Default value	R/W	Descriptions
0x0006544d	dpc_ctrl47		RO	Debug for short channel: [7] enable the option for the vertical disconnection [6] enable the option for the save channel [5] enbale the option for the different channel [4:3] enable the option for the regcluster [2] enable the option for the vbp [1] enable the option for the color line [0] enable the option for the smooth
0x0006544e	dpc_ctrl48		RO	Debug for short channel: [7] reserved [6:0] threshold for white pixel
0x0006544f	dpc_ctrl49		RO	Debug for short channel: [7] reserved [6:0] threshold for black pixel
0x00065450	dpc_ctrl4a		RO	Debug for short channel: [7] reserved [6:0] threshold1
0x00065451	dpc_ctrl4b		RO	Debug for short channel: [7:0] threshold2
0x00065452	dpc_ctrl4c		RO	Debug for short channel [7:0] threshold3
0x00065453	dpc_ctrl4d		RO	Debug for short channel [7] reserved [6:0] threshold4
0x00065454	dpc_ctrl4e		RO	[7:0] debug out 0
0x00065455	dpc_ctrl4f		RO	[7:0] debug out 1
0x00065456	dpc_ctrl50		RO	[7:0] debug out 2
0x00065457	dpc_ctrl51		RO	[7:0] debug out 3
0x00065458	dpc_ctrl52		RO	[7:0] debug out 4

PRELIMINARY CONFIDENTIAL

6.9 DNS Register

Address	Register name	Default value	R/W	Descriptions

Address	Register name	Default value	R/W	Descriptions
0x00065510	dns_ctrl10	4'h04	RW	Long: [7:4] reserved [3:0] noise_y_a
0x00065511	dns_ctrl11	5'h08	RW	Long: [7:5] reserved [4:0] noise_uv_a
0x00065512	dns_ctrl12	8'h00	RW	Long: [7:1] reserved [0] dns_manual
0x00065513	dns_ctrl13	8'h02	RW	Long: [7:0] noise_y
0x00065514	dns_ctrl14	1'h00	RW	Long: [7:1] reserved [0] noise_u[8]
0x00065515	dns_ctrl15	8'h02	RW	Long: [7:0] noise_u[7:0]
0x00065516	dns_ctrl16	1'h00	RW	Long: [7:1] reserved [0] noise_v[8]
0x00065517	dns_ctrl17	8'h02	RW	Long: [7:0] noise_v[7:0]
0x00065518	dns_ctrl18	8'h06	RW	Long: [7:0] dns_edgethre
0x00065519	dns_ctrl19	8'h04	RW	Long: [7:4] reserved [3:0] dns_gbgr_extra[3:0]
0x0006551a	dns_ctrl20	8'h02	RW	Long: [7:0] noise_y_list_0
0x0006551b	dns_ctrl21	8'h04	RW	Long : [7:0] noise_y_list_1
0x0006551c	dns_ctrl22	8'h08	RW	Long: [7:0] noise_y_list_2
0x0006551d	dns_ctrl23	8'h14	RW	Long: [7:0] noise_y_list_3

PRELIMINARY CONFIDENTIAL

Address	Register name	Default value	R/W	Descriptions
0x0006551e	dns_ctrl24	8'h1e	RW	Long: [7:0] noise_y_list_4
0x0006551f	dns_ctrl25	8'h28	RW	Long: [7:0] noise_y_list_5
0x00065520	dns_ctrl26	8'h32	RW	Long: [7:0] noise_y_list_6_l
0x00065521	dns_ctrl27	8'h00	RW	Long: [7:1] reserved [0] dns_dummy [0]
0x00065522	dns_ctrl28	1'h00	RW	Long: [7:1] reserved [0] noise_uv_list_0[8]
0x00065523	dns_ctrl29	8'h02	RW	Long: [7:0] noise_uv_list_0[7:0]
0x00065524	dns_ctrl30	1'h00	RW	Long: [7:1] reserved [0] noise_uv_list_1[8]
0x00065525	dns_ctrl31	8'h04	RW	Long: [7:0] noise_uv_list_1[7:0]
0x00065526	dns_ctrl32	1'h00	RW	Long: [7:1] reserved [0] noise_uv_list_2[8]
0x00065527	dns_ctrl33	8'h0c	RW	Long: [7:0] noise_uv_list_2[7:0]
0x00065528	dns_ctrl34	1'h00	RW	Long: [7:1] reserved [0] noise_uv_list_3[8]
0x00065529	dns_ctrl35	8'h28	RW	Long: noise_uv_list_3[7:0]
0x0006552a	dns_ctrl36	1'h00	RW	Long : [7:1] reserved [0] noise_uv_list_4[8]
0x0006552b	dns_ctrl37	8'h32	RW	Long : noise_uv_list_4[7:0]

PRELIMINARY CONFIDENTIAL

Address	Register name	Default value	R/W	Descriptions
0x0006552c	dns_ctrl38	1'h00	RW	Long : [7:1] reserved [0] noise_uv_list_5[8]
0x0006552d	dns_ctrl39	8'h3c	RW	Long : noise_uv_list_5[7:0]
0x0006552e	dns_ctrl40	1'h00	RW	Long : [7:1] reserved [0] noise_uv_list_6[8]
0x0006552f	dns_ctrl41	8'h4c	RW	Long : noise_uv_list_6[7:0]
0x00065530	dns_ctrl42		RO	Debug for Long: [7:0] noise threshold for y
0x00065531	dns_ctrl43		RO	Debug for Long: [7:0] edge threshold
0x00065532	dns_ctrl44		RO	Debug for Long: [7:1] reserved [0] noise threshold for u[8]
0x00065533	dns_ctrl45		RO	Debug for Long: [7:0] noise threshold for u[7:0]
0x00065534	dns_ctrl46		RO	Debug for Long: [7:1] reserved [0] noise threshold for v[8]
0x00065535	dns_ctrl47		RO	Debug for Long: [7:0] noise threshold for v[7:0]
0x00065536	dns_ctrl48		RO	Degug for Long: [7:3] reserved [2:0] thre real gain for dns[10:8]
0x00065537	dns_ctrl49		RO	Degug for Long: [7:0] thre real gain for dns[7:0]
0x00065538	dns_ctrl50	4'h04	RW	Short: [7:4] reserved [3:0] noise_y_a
0x00065539	dns_ctrl51	5'h08	RW	Short: [7:5] reserved

PRELIMINARY CONFIDENTIAL

Address	Register name	Default value	R/W	Descriptions
				[4:0] noise_uv_a
0x0006553a	dns_ctrl52	8'h00	RW	Short: [7:1] reserved [0] dns_manual
0x0006553b	dns_ctrl53	8'h02	RW	Short: [7:0] noise_y
0x0006553c	dns_ctrl54	1'h00	RW	Short: [7:1] reserved [0] noise_u[8]
0x0006553d	dns_ctrl55	8'h02	RW	Short: [7:0] noise_u[7:0]
0x0006553e	dns_ctrl56	1'h00	RW	Short: [7:1] reserved [0] noise_v[8]
0x0006553f	dns_ctrl57	8'h02	RW	Short: [7:0] noise_v[7:0]
0x00065540	dns_ctrl58	8'h06	RW	Short: [7:0] r_dns_edgethre
0x00065541	dns_ctrl59	8'h04	RW	Short: [7:4] reserved [3:0] dns_gbgr_extra[3:0]
0x00065542	dns_ctrl60	8'h02	RW	Short: [7:0] noise_y_list_0
0x00065543	dns_ctrl61	8'h04	RW	Short: [7:0] noise_y_list_1
0x00065544	dns_ctrl62	8'h08	RW	Short: [7:0] noise_y_list_2
0x00065545	dns_ctrl63	8'h14	RW	Short: [7:0] noise_y_list_3
0x00065546	dns_ctrl64	8'h1e	RW	Short: [7:0] noise_y_list_4
0x00065547	dns_ctrl65	8'h28	RW	Short: [7:0] noise_y_list_5

PRELIMINARY CONFIDENTIAL

Address	Register name	Default value	R/W	Descriptions
0x00065548	dns_ctrl66	8'h32	RW	Short: [7:0] noise_y_list_6
0x00065549	dns_ctrl67	1'h00	RW	Short: [7:1] reserved [0] noise_uv_list_0[8]
0x0006554a	dns_ctrl68	8'h02	RW	Short: [7:0] noise_uv_list_0[7:0]
0x0006554b	dns_ctrl69	1'h00	RW	Short: [7:1] reserved [0] noise_uv_list_1[8]
0x0006554c	dns_ctrl70	8'h04	RW	Short: [7:0] noise_uv_list_1[7:0]
0x0006554d	dns_ctrl71	1'h00	RW	Short: [7:1] reserved [0] noise_uv_list_2[8]
0x0006554e	dns_ctrl72	8'h0c	RW	Short: [7:0] noise_uv_list_2[7:0]
0x0006554f	dns_ctrl73	1'h00	RW	Short: [7:1] reserved [0] noise_uv_list_3[8]
0x00065550	dns_ctrl74	8'h28	RW	Short: [7:0] noise_uv_list_3[7:0]
0x00065551	dns_ctrl75	1'h00	RW	Short: [7:1] reserved [0] noise_uv_list_4[8]
0x00065552	dns_ctrl76	8'h32	RW	Short: [7:0] noise_uv_list_4[7:0]
0x00065553	dns_ctrl77	1'h00	RW	Short: [7:1] reserved [0] noise_uv_list_5[8]
0x00065554	dns_ctrl78	8'h3c	RW	Short: [7:0] noise_uv_list_5[7:0]
0x00065555	dns_ctrl79	1'h00	RW	Short: [7:1] reserved

PRELIMINARY CONFIDENTIAL

Address	Register name	Default value	R/W	Descriptions
				[0] noise_uv_list_6[8]
0x00065556	dns_ctrl80	8'h4c	RW	Short: [7:0] noise_uv_list_6[7:0]
0x00065557	dns_ctrl81		RO	Debug for Short: [7:0] noise threshold for y
0x00065558	dns_ctrl82		RO	Debug for Short: [7:0] edge threshold
0x00065559	dns_ctrl83		RO	Debug for Short: [7:1] reserved [0] noise threshold for u[8]
0x0006555a	dns_ctrl84		RO	Debug for Short: noise threshold for u[7:0]
0x0006555b	dns_ctrl85		RO	Debug for Short: [7:1] reserved [0] noise threshold for v[8]
0x0006555c	dns_ctrl86		RO	Debug for Short: [7:0] noise threshold for v[7:0]

6.10 CIP Register

Address	Register name	Default value	R/W	Descriptions
0x00065600	cip_ctrl00_l	2'h0	RW	Long: [7:2] reserved [1:0] min_gain[9:8]: Min_gain is used in CIP_Start module, and it is used to judge in which range the current sensor is.
0x00065601	cip_ctrl01_l	8'h10	RW	Long: [7:0] min_gain[7:0]:
0x00065602	cip_ctrl02_l	2'h00	RW	Long: [1:0] max_gain[9:8]: Max_gain is used in CIP_Start module, and it is used to judge in which range the current sensor is.
0x00065603	cip_ctrl03_l	8'h80	RW	Long:

PRELIMINARY CONFIDENTIAL

Address	Register name	Default value	R/W	Descriptions
				[7:0] max_gain[7:0]:
0x00065604	cip_ctrl04_l	1'h00	RW	Long: [0] min_noise[8]: min_noise is used for calculating int_noise in auto-mode
0x00065605	cip_ctrl05_l	8'h10	RW	Long: [7:0] min_noise[7:0]
0x00065606	cip_ctrl06_l	2'h01	RW	Long: [7:2] reserved [1:0] noise_slope[1:0]: Slope value used for calculating int_noise in auto-mode
0x00065607	cip_ctrl07_l	8'h00	RW	Long: [7:0] noise_slope[7:0]
0x00065608	cip_ctrl08_l	8'h10	RW	Long: [7:0] unsharpen_mask0: UnSharpenMask0 used in some Filters as multipliers
0x00065609	cip_ctrl09_l	8'h30	RW	Long: [7:0] unsharpen_mask1: UnSharpenMask0 used in some Filters as multipliers
0x0006560a	cip_ctrl0a_l	8'h01	RW	Long: [7:2] reserved [1] man_en: enable manual mode [0] anti_aliasing: Enable Anti-Alliasing
0x0006560b	cip_ctrl0b_l	8'h02	RW	Long: [7:4] reserved [3:0] combine_alpha[3:0]: Combine coefficients for U, V & H components
0x0006560c	cip_ctrl0c_l	5'h00	RW	Long: [7:5] reserved [4:0] min_sharpen[4:0]: Min_sharpen is used for sharpen_p calculation in auto-mode
0x0006560d	cip_ctrl0d_l	6'h10	RW	Long: [7:6] reserved [5:0] max_sharpen[5:0]: Max_sharpen is used for sharpen_p calculation in auto-mode
0x0006560e	cip_ctrl0e_l	8'h10	RW	Long:

PRELIMINARY CONFIDENTIAL

Address	Register name	Default value	R/W	Descriptions
				[7:6] reserved [5:0] min_sharpen_tp[5:0]: Min_sharpen_tp is used for sharpen_tp computation in auto-mode
0x0006560f	cip_ctrl0f_l	8'h60	RW	Long: [7:0] max_sharpen_tp[7:0]: Max_sharpen_tp is used for sharpen_tp computation in auto-mode
0x00065610	cip_ctrl10_l	8'h20	RW	Long: [7:6] reserved [5:0] min_sharpen_tm[5:0]: Min_sharpen_tm is used for sharpen_tm computation in auto-mode
0x00065611	cip_ctrl11_l	8'h60	RW	Long: [7:0] max_sharpen_tm[7:0]: Max_sharpen_tm is used for sharpen_tm computation in auto-mode
0x00065612	cip_ctrl12_l	8'h40	RW	Long: [7:0] sharpen_tya[7:0]: Threshold used for the function of Adaptive Sharpen
0x00065613	cip_ctrl13_l	8'h10	RW	Long: [7:5] reserved [4:0] sharpen_alpha[4:0]: Sharpen_alpha is used for calculating sharpen_m after sharpen_p is obtained.
0x00065614	cip_ctrl14_l	8'h06	RW	Long: [7:6] reserved [5:0] mthre[5:0]: Threshold for Medium Frequency signals
0x00065615	cip_ctrl15_l	8'h08	RW	Long: [7:6] reserved [5:0] hthre[5:0]: Threshold for High Frequency signals
0x00065617	cip_ctrl17_l	8'h06	RW	Long: [7:4] reserved [3:0] hfreq_coef[3:0]: Coefficients for High frequency signals
0x00065618	cip_ctrl18_l	8'h00	RW	Long: [7:2] reserved [1:0] efreq_coef[1:0]: Coefficients for E frequency signals
0x00065619	cip_ctrl19_l	8'h08	RW	Long: [7:6] reserved [5:0] lthre[5:0]: Threshold for Low Frequency signals

PRELIMINARY CONFIDENTIAL

Address	Register name	Default value	R/W	Descriptions
0x0006561a	cip_ctrl1a_l	8'h00	RW	Long: [7:2] reserved [1:0] man_int_noise[9:8]: int_noise is inputted only in man-mode, it is used as threshold in some filters
0x0006561b	cip_ctrl1b_l	8'h30	RW	Long: [7:0] man_int_noise[7:0]
0x0006561c	cip_ctrl1c_l	8'h00	RW	Long: [7:1] reserved [0] man_inv_noise[8]: inv_noise is inputted only in man-mode, it is used as threshold in some filters
0x0006561d	cip_ctrl1d_l	8'h55	RW	Long: [7:0]: man_inv_noise[7:0]
0x0006561e	cip_ctrl1e_l	8'h08	RW	Long: [7:6] reserved [5:0] man_sharpen_p[5:0]: sharpen_p is inputted only in man-mode, it is used for the function of adaptive sharpen
0x0006561f	cip_ctrl1f_l	8'h08	RW	Long: [7] reserved [6:0] man_sharpen_m[6:0]: sharpen_m is inputted only in man-mode, it is used for the function of adaptive sharpen
0x00065620	cip_ctrl20_l	8'h06	RW	Long: [7:0] man_sharpen_tp[7:0]: sharpen_tp is inputted only in man-mode, it is used for the function of adaptive sharpen
0x00065621	cip_ctrl21_l	8'h08	RW	Long: [7:0] man_sharpen_tm[7:0]: sharpen_tm is inputted only in man-mode, it is used for the function of adaptive sharpen
0x00065630			RO	Long: [7:6] reserved [5:0] sharpen_p
0x00065631			RO	Long: [7] reserved [6:0] sharpen_m
0x00065632			RO	Long: [7:0] sharpen_tp

PRELIMINARY CONFIDENTIAL

Address	Register name	Default value	R/W	Descriptions
0x00065633			RO	Long: [7:0] sharpen_tm
0x00065634			RO	Long: [7:2] reserved [1:0] int_noise[9:8]
0x00065635			RO	Long: [7:0] int_noise[7:0]
0x00065636			RO	Long: [7:1] reserved [0] inv_noise[8]
0x00065637			RO	Long: [7:0] inv_noise[7:0]
0x00065640	cip_ctrl00_s	2'h00	RW	Short: [7:2] reserved [1:0] min_gain[9:8]: Min_gain is used in CIP_Start module, and it is used to judge in which range the current sensor is.
0x00065641	cip_ctrl01_s	8'h10	RW	Short: [7:0] min_gain[7:0]:
0x00065642	cip_ctrl02_s	2'h00	RW	Short: [1:0] max_gain[9:8]: Max_gain is used in CIP_Start module, and it is used to judge in which range the current sensor is.
0x00065643	cip_ctrl03_s	8'h80	RW	Short: [7:0] max_gain[7:0]:
0x00065644	cip_ctrl04_s	1'h00	RW	Short: [0] min_noise[8]: min_noise is used for calculating int_noise in auto-mode
0x00065645	cip_ctrl05_s	8'h10	RW	Short: [7:0] min_noise[7:0]
0x00065646	cip_ctrl06_s	2'h01	RW	Short: [7:2] reserved [1:0] noise_slope[1:0]: Slope value used for calculating int_noise in auto-mode
0x00065647	cip_ctrl07_s	8'h00	RW	Short:

PRELIMINARY CONFIDENTIAL

Address	Register name	Default value	R/W	Descriptions
				[7:0] noise_slope[7:0]
0x00065648	cip_ctrl08_s	8'h10	RW	Short: [7:0] unsharpen_mask0: UnSharpenMask0 used in some Filters as multipliers
0x00065649	cip_ctrl09_s	8'h30	RW	Short: [7:0] unsharpen_mask1: UnSharpenMask0 used in some Filters as multipliers
0x0006564a	cip_ctrl0a_s	8'h01	RW	Short: [7:2] reserved [1] man_en: enable manual mode [0] anti_aliasing: Enable Anti-Alliasing
0x0006564b	cip_ctrl0b_s	8'h02	RW	Short: [7:4] reserved [3:0] combine_alpha[3:0]: Combine coefficients for U, V & H components
0x0006564c	cip_ctrl0c_s	5'h00	RW	Short: [7:5] reserved [4:0] min_sharpen[4:0]: Min_sharpen is used for sharpen_p calculation in auto-mode
0x0006564d	cip_ctrl0d_s	6'h00	RW	Short: [7:6] reserved [5:0] max_sharpen[5:0]: Max_sharpen is used for sharpen_p calculation in auto-mode
0x0006564e	cip_ctrl0e_s	8'h10	RW	Short: [7:6] reserved [5:0] min_sharpen_tp[5:0]: Min_sharpen_tp is used for sharpen_tp computation in auto-mode
0x0006564f	cip_ctrl0f_s	8'h60	RW	Short: [7:0] max_sharpen_tp[7:0]: Max_sharpen_tp is used for sharpen_tp computation in auto-mode
0x00065650	cip_ctrl10_s	8'h20	RW	Short: [7:6] reserved [5:0] min_sharpen_tm[5:0]: Min_sharpen_tm is used for sharpen_tm computation in auto-mode
0x00065651	cip_ctrl11_s	8'h60	RW	Short: [7:0] max_sharpen_tm[7:0]: Max_sharpen_tm is used for

PRELIMINARY CONFIDENTIAL

Address	Register name	Default value	R/W	Descriptions
				sharpen_tm computation in auto-mode
0x00065652	cip_ctrl12_s	8'h40	RW	Short: [7:0] sharpen_tya[7:0]: Threshold used for the function of Adaptive Sharpen
0x00065653	cip_ctrl13_s	8'h10	RW	Short: [7:5] reserved [4:0] sharpen_alpha[4:0]: Sharpen_alpha is used for calculating sharpen_m after sharpen_p is obtained.
0x00065654	cip_ctrl14_s	8'h06	RW	Short: [7:6] reserved [5:0] mthre[5:0]: Threshold for Medium Frequency signals
0x00065655	cip_ctrl15_s	8'h08	RW	Short: [7:6] reserved [5:0] hthre[5:0]: Threshold for High Frequency signals
0x00065657	cip_ctrl17_s	8'h06	RW	Short: [7:4] reserved [3:0] hfreq_coef[3:0]: Coefficients for High frequency signals
0x00065658	cip_ctrl18_s	8'h00	RW	Short: [7:2] reserved [1:0] efreq_coef[1:0]: Coefficients for E frequency signals
0x00065659	cip_ctrl19_s	8'h08	RW	Short: [7:6] reserved [5:0] lthre[5:0]: Threshold for Low Frequency signals
0x0006565a	cip_ctrl1a_s	8'h00	RW	Short: [7:2] reserved [1:0] man_int_noise[9:8]: int_noise is inputted only in man-mode, it is used as threshold in some filters
0x0006565b	cip_ctrl1b_s	8'h30	RW	Short: [7:0] man_int_noise[7:0]
0x0006565c	cip_ctrl1c_s	8'h00	RW	Short: [7:1] reserved [0] man_inv_noise[8]: inv_noise is inputted only in man-mode, it is used as threshold in some filters
0x0006565d	cip_ctrl1d_s	8'h55	RW	Short:

PRELIMINARY CONFIDENTIAL

Address	Register name	Default value	R/W	Descriptions
				[7:0]: man_inv_noise[7:0]
0x0006565e	cip_ctrl1e_s	8'h08	RW	Short: [7:6] reserved [5:0] man_sharpen_p[5:0]: sharpen_p is inputted only in man-mode, it is used for the function of adaptive sharpen
0x0006565f	cip_ctrl1f_s	8'h08	RW	Short: [7] reserved [6:0] man_sharpen_m[6:0]: sharpen_m is inputted only in man-mode, it is used for the function of adaptive sharpen
0x00065660	cip_ctrl20_s	8'h06	RW	Short: [7:0] man_sharpen_tp[7:0]: sharpen_tp is inputted only in man-mode, it is used for the function of adaptive sharpen
0x00065661	cip_ctrl21_s	8'h08	RW	Short: [7:0] man_sharpen_tm[7:0]: sharpen_tm is inputted only in man-mode, it is used for the function of adaptive sharpen
0x00065670			RO	Short: [7:6] reserved [5:0] sharpen_p
0x00065671			RO	Short: [7] reserved [6:0] sharpen_m
0x00065672			RO	Short: [7:0] sharpen_tp
0x00065673			RO	Short: [7:0] sharpen_tm
0x00065674			RO	Short: [7:2] reserved [1:0] int_noise[9:8]
0x00065675			RO	Short: [7:0] int_noise[7:0]
0x00065676			RO	Short: [7:1] reserved [0] inv_noise[8]
0x00065677			RO	Short:

PRELIMINARY CONFIDENTIAL

Address	Register name	Default value	R/W	Descriptions
				[7:0] inv_noise[7:0]

6.11 CMX Register (MCU)

Address	Register name	Default value	R/W	Descriptions
0x00066ca8	CMX_00	2'h01	RW	[7:2] reserved [1:0] Long: cmx_00[9:8]
0x00066ca9	CMX_01	8'h00	RW	[7:0] Long: cmx_00[7:0]
0x00066caa	CMX_02	2'h00	RW	[7:2] reserved [1:0] Long: cmx_01[9:8]
0x00066cab	CMX_03	8'h00	RW	[7:0] Long: cmx_01[7:0]
0x00066cac	CMX_04	2'h00	RW	[7:2] reserved [1:0] Long: cmx_02[9:8]
0x00066cad	CMX_05	8'h00	RW	[7:0] Long: cmx_02[7:0]
0x00066cae	CMX_06	2'h00	RW	[7:2] reserved [1:0] Long: cmx_10[9:8]
0x00066caf	CMX_07	8'h00	RW	[7:0] Long: cmx_10[7:0]
0x00066cb0	CMX_08	2'h00	RW	[7:2] reserved [1:0] Long: cmx_11[9:8]
0x00066cb1	CMX_09	8'h00	RW	[7:0] Long: cmx_11[7:0]
0x00066cb2	CMX_10	2'h00	RW	[7:2] reserved [1:0] Long: cmx_12[9:8]
0x00066cb3	CMX_11	8'h00	RW	[7:0] Long: cmx_12[7:0]
0x00066cb4	CMX_12	2'h00	RW	[7:2] reserved [1:0] Long: cmx_20[9:8]
0x00066cb5	CMX_13	8'h00	RW	[7:0] Long: cmx_20[7:0]
0x00066cb6	CMX_14	2'h00	RW	[7:2] reserved [1:0] Long: cmx_21[9:8]
0x00066cb7	CMX_15	8'h00	RW	[7:0] Long: cmx_21[7:0]
0x00066cb8	CMX_16	2'h01	RW	[7:2] reserved

PRELIMINARY CONFIDENTIAL

Address	Register name	Default value	R/W	Descriptions
				[1:0] Long: cmx_22[9:8]
0x00066cb9	CMX_17	8'h00	RW	[7:0] Long: cmx_22[7:0]
0x00066cba	CMX_18	1'h00	RW	[7:6] reserved [0] Long: cmxsign[8]
0x00066cbb	CMX_19	8'h00	RW	[7:0] Long: cmxsign[7:0]
0x00066cbc	CMX_20	2'h01	RW	[7:2] reserved [1:0] Short: cmx_00[9:8]
0x00066cbd	CMX_21	8'h00	RW	[7:0] Short: cmx_00[7:0]
0x00066cbe	CMX_22	2'h00	RW	[7:2] reserved [1:0] Short: cmx_01[9:8]
0x00066cbf	CMX_23	8'h00	RW	[7:0] Short: cmx_01[7:0]
0x00066cc0	CMX_24	2'h00	RW	[7:2] reserved [1:0] Short: cmx_02[9:8]
0x00066cc1	CMX_25	8'h00	RW	[7:0] Short: cmx_02[7:0]
0x00066cc2	CMX_26	2'h01	RW	[7:2] reserved [1:0] Short: cmx_10[9:8]
0x00066cc3	CMX_27	8'h00	RW	[7:0] Short: cmx_10[7:0]
0x00066cc4	CMX_28	2'h01	RW	[7:2] reserved [1:0] Short: cmx_11[9:8]
0x00066cc5	CMX_29	8'h00	RW	[7:0] Short: cmx_11[7:0]
0x00066cc6	CMX_30	2'h00	RW	[7:2] reserved [1:0] Short: cmx_12[9:8]
0x00066cc7	CMX_31	8'h00	RW	[7:0] Short: cmx_12[7:0]
0x00066cc8	CMX_32	2'h00	RW	[7:2] reserved [1:0] Short: cmx_20[9:8]
0x00066cc9	CMX_33	8'h00	RW	[7:0] Short: cmx_20[7:0]
0x00066cca	CMX_34	2'h00	RW	[7:2] reserved [1:0] Short: cmx_21[9:8]
0x00066ccb	CMX_35	8'h00	RW	[7:0] Short: cmx_21[7:0]
0x00066ccc	CMX_36	2'h01	RW	[7:2] reserved [1:0] Short: cmx_22[9:8]

PRELIMINARY CONFIDENTIAL

Address	Register name	Default value	R/W	Descriptions
0x00066ccd	CMX_37	8'h00	RW	[7:0] Short: cmx_22[7:0]
0x00066cce	CMX_38	1'h00	RW	[7:6] reserved [0] Short: cmxsign[8]
0x00066ccf	CMX_39	8'h00	RW	[7:0] Short: cmxsign[7:0]

6.12 Combine Register

Address	Register name	Default value	R/W	Descriptions
0x00065800	comb_ctrl0	5'h17	RW	[7:5] reserved [4] o4rgb_gamma_en [3] ls_order [2] combine_uv_weight enable [1] color_diff_compensate enable [0] compensate_error enable
0x00065801	comb_ctrl1	8'h05	RW	[7:4] reserved [3:0] comb_thre_s0, threshold1 of short channel
0x00065802	comb_ctrl2	8'h08	RW	[7:4] reserved [3:0] comb_thre_s1, threshold2 of short channel
0x00065803	comb_ctrl3	8'h0a	RW	[7:4] reserved [3:0] comb_thre_s2, threshold3 of short channel
0x00065804	comb_ctrl4	8'h09	RW	[7:4] reserved [3:0] comb_thre_l0, threshold1 of long channel
0x00065805	comb_ctrl5	8'h0a	RW	[7:4] reserved [3:0] comb_thre_l1, threshold2 of long channel
0x00065806	comb_ctrl6	8'h0a	RW	[7:4] reserved [3:0] comb_thre_l2, threshold3 of long channel
0x00065807	comb_ctrl7	8'h05	RW	[7:4] reserved [3:0] comb_uv_thre_s0, uv threshold1 of short channel
0x00065808	comb_ctrl8	8'h08	RW	[7:4] reserved [3:0] comb_uv_thre_s1, uv threshold2 of short channel
0x00065809	comb_ctrl9	8'h0a	RW	[7:4] reserved [3:0] comb_uv_thre_s2, uv threshold3 of short channel

PRELIMINARY CONFIDENTIAL

Address	Register name	Default value	R/W	Descriptions
0x0006580a	comb_ctrl10	8'h09	RW	[7:4] reserved [3:0] comb_uv_thre_l0, uv threshold1 of long channel
0x0006580b	comb_ctrl11	8'h0a	RW	[7:4] reserved [3:0] comb_uv_thre_l1, uv threshold2 of long channel
0x0006580c	comb_ctrl12	8'h0a	RW	[7:4] reserved [3:0] comb_uv_thre_l2, uv threshold3 of long channel
0x0006580d	comb_ctrl13	8'h80	RW	[7:0] comb_weight00
0x0006580e	comb_ctrl14	8'h80	RW	[7:0] comb_weight01
0x0006580f	comb_ctrl15	8'h60	RW	[7:0] comb_weight02
0x00065810	comb_ctrl16	8'h40	RW	[7:0] comb_weight03
0x00065811	comb_ctrl17	8'h80	RW	[7:0] comb_weight10
0x00065812	comb_ctrl18	8'h80	RW	[7:0] comb_weight11
0x00065813	comb_ctrl19	8'h20	RW	[7:0] comb_weight12
0x00065814	comb_ctrl20	8'h10	RW	[7:0] comb_weight13
0x00065815	comb_ctrl21	8'h80	RW	[7:0] comb_weight20
0x00065816	comb_ctrl22	8'h80	RW	[7:0] comb_weight21
0x00065817	comb_ctrl23	8'h00	RW	[7:0] comb_weight22
0x00065818	comb_ctrl24	8'h00	RW	[7:0] comb_weight23
0x00065819	comb_ctrl25	8'h80	RW	[7:0] comb_weight30
0x0006581a	comb_ctrl26	8'h80	RW	[7:0] comb_weight31
0x0006581b	comb_ctrl27	8'h00	RW	[7:0] comb_weight32
0x0006581c	comb_ctrl28	8'h00	RW	[7:0] comb_weight33
0x0006581d	comb_ctrl29	8'h80	RW	[7:0] comb_uv_weight00
0x0006581e	comb_ctrl30	8'h80	RW	[7:0] comb_uv_weight01
0x0006581f	comb_ctrl31	8'h80	RW	[7:0] comb_uv_weight02
0x00065820	comb_ctrl32	8'h80	RW	[7:0] comb_uv_weight03
0x00065821	comb_ctrl33	8'h80	RW	[7:0] comb_uv_weight10
0x00065822	comb_ctrl34	8'h80	RW	[7:0] comb_uv_weight11
0x00065823	comb_ctrl35	8'h60	RW	[7:0] comb_uv_weight12

PRELIMINARY CONFIDENTIAL

Address	Register name	Default value	R/W	Descriptions
0x00065824	comb_ctrl36	8'h40	RW	[7:0] comb_uv_weight13
0x00065825	comb_ctrl37	8'h80	RW	[7:0] comb_uv_weight20
0x00065826	comb_ctrl38	8'h80	RW	[7:0] comb_uv_weight21
0x00065827	comb_ctrl39	8'h00	RW	[7:0] comb_uv_weight22
0x00065828	comb_ctrl40	8'h00	RW	[7:0] comb_uv_weight23
0x00065829	comb_ctrl41	8'h80	RW	[7:0] comb_uv_weight30
0x0006582a	comb_ctrl42	8'h80	RW	[7:0] comb_uv_weight31
0x0006582b	comb_ctrl43	8'h00	RW	[7:0] comb_uv_weight32
0x0006582c	comb_ctrl44	8'h00	RW	[7:0] comb_uv_weight33
0x0006582d	comb_ctrl45	8'h3c	RW	debug mode for combine [7:6] reserved [5:2] fix value for ro register [1] debug mode 2 (eof to vsync fix value, other zero) [0] debug mode 1 (always fix value)
0x0006582e	comb_ctrl46	4'h00	RW	[7:4] reserved [3:0] nYStatSampling
0x0006582f	comb_ctrl47	8'h00	RW	[7:2] reserved [1:0] m_nHFreqShiftFlag
0x00065830	comb_ctrl48	8'h01	RW	[7:1] reserved [0] m_bSpecialOpionEnable

6.13 Combine Register (MCU Read)

Address	Register name	Default value	R/W	Descriptions
0x00066960	comb_ro_r00		RO	[7:0] 8{nSumE[43]}
0x00066961	comb_ro_r01		RO	[7:0] 8{nSumE[43]}
0x00066962	comb_ro_r02		RO	[7:4] 8{nSumE[43]} [3:0] nSumE[43:40]
0x00066963	comb_ro_r03		RO	[7:0] nSumE[39:32]
0x00066964	comb_ro_r04		RO	[7:0] nSumE[31:24]

PRELIMINARY CONFIDENTIAL

Address	Register name	Default value	R/W	Descriptions
0x00066965	comb_ro_r05		RO	[7:0] nSumE[23:16]
0x00066966	comb_ro_r06		RO	[7:0] nSumE[15:8]
0x00066967	comb_ro_r07		RO	[7:0] nSumE[7:0]
0x00066968	comb_ro_r08		RO	[7:5] reserved [2:0] nSumW[26:24]
0x00066969	comb_ro_r09		RO	[7:0] nSumW[23:16]
0x0006696a	comb_ro_r10		RO	[7:0] nSumW[15:8]
0x0006696b	comb_ro_r11		RO	[7:0] nSumW[7:0]
0x0006696c	comb_ro_r12		RO	[7:0] LocalSumYBuf[0][31:24]
0x0006696d	comb_ro_r13		RO	[7:0] LocalSumYBuf[0][23:16]
0x0006696e	comb_ro_r14		RO	[7:0] LocalSumYBuf[0][15:8]
0x0006696f	comb_ro_r15		RO	[7:0] LocalSumYBuf[0][7:0]
0x00066970	comb_ro_r16		RO	[7:0] LocalSumYBuf[1][31:24]
0x00066971	comb_ro_r17		RO	[7:0] LocalSumYBuf[1][23:16]
0x00066972	comb_ro_r18		RO	[7:0] LocalSumYBuf[1][15:8]
0x00066973	comb_ro_r19		RO	[7:0] LocalSumYBuf[1][7:0]
0x00066974	comb_ro_r20		RO	[7:0] LocalSumYBuf[2][31:24]
0x00066975	comb_ro_r21		RO	[7:0] LocalSumYBuf[2][23:16]
0x00066976	comb_ro_r22		RO	[7:0] LocalSumYBuf[2][15:8]
0x00066977	comb_ro_r23		RO	[7:0] LocalSumYBuf[2][7:0]
0x00066978	comb_ro_r24		RO	[7:0] LocalSumYBuf[3][31:24]
0x00066979	comb_ro_r25		RO	[7:0] LocalSumYBuf[3][23:16]
0x0006697a	comb_ro_r26		RO	[7:0] LocalSumYBuf[3][15:8]
0x0006697b	comb_ro_r27		RO	[7:0] LocalSumYBuf[3][7:0]
0x0006697c	comb_ro_r28		RO	[7:0] LocalSumYBuf[4][31:24]
0x0006697d	comb_ro_r29		RO	[7:0] LocalSumYBuf[4][23:16]
0x0006697e	comb_ro_r30		RO	[7:0] LocalSumYBuf[4][15:8]
0x0006697f	comb_ro_r31		RO	[7:0] LocalSumYBuf[4][7:0]

PRELIMINARY CONFIDENTIAL

Address	Register name	Default value	R/W	Descriptions
0x00066980	comb_ro_r32		RO	[7:0] LocalSumYBuf[5][31:24]
0x00066981	comb_ro_r33		RO	[7:0] LocalSumYBuf[5][23:16]
0x00066982	comb_ro_r34		RO	[7:0] LocalSumYBuf[5][15:8]
0x00066983	comb_ro_r35		RO	[7:0] LocalSumYBuf[5][7:0]
0x00066984	comb_ro_r36		RO	[7:0] LocalSumYBuf[6][31:24]
0x00066985	comb_ro_r37		RO	[7:0] LocalSumYBuf[6][23:16]
0x00066986	comb_ro_r38		RO	[7:0] LocalSumYBuf[6][15:8]
0x00066987	comb_ro_r39		RO	[7:0] LocalSumYBuf[6][7:0]
0x00066988	comb_ro_r40		RO	[7:0] LocalSumYBuf[7][31:24]
0x00066989	comb_ro_r41		RO	[7:0] LocalSumYBuf[7][23:16]
0x0006698a	comb_ro_r42		RO	[7:0] LocalSumYBuf[7][15:8]
0x0006698b	comb_ro_r43		RO	[7:0] LocalSumYBuf[7][7:0]
0x0006698c	comb_ro_r44		RO	[7:0] LocalSumYBuf[8][31:24]
0x0006698d	comb_ro_r45		RO	[7:0] LocalSumYBuf[8][23:16]
0x0006698e	comb_ro_r46		RO	[7:0] LocalSumYBuf[8][15:8]
0x0006698f	comb_ro_r47		RO	[7:0] LocalSumYBuf[8][7:0]
0x00066990	comb_ro_r48		RO	[7:0] LocalSumYBuf[9][31:24]
0x00066991	comb_ro_r49		RO	[7:0] LocalSumYBuf[9][23:16]
0x00066992	comb_ro_r50		RO	[7:0] LocalSumYBuf[9][15:8]
0x00066993	comb_ro_r51		RO	[7:0] LocalSumYBuf[9][7:0]
0x00066994	comb_ro_r52		RO	[7:0] LocalSumYBuf[10][31:24]
0x00066995	comb_ro_r53		RO	[7:0] LocalSumYBuf[10][23:16]
0x00066996	comb_ro_r54		RO	[7:0] LocalSumYBuf[10][15:8]
0x00066997	comb_ro_r55		RO	[7:0] LocalSumYBuf[10][7:0]
0x00066998	comb_ro_r56		RO	[7:0] LocalSumYBuf[11][31:24]
0x00066999	comb_ro_r57		RO	[7:0] LocalSumYBuf[11][23:16]
0x0006699a	comb_ro_r58		RO	[7:0] LocalSumYBuf[11][15:8]
0x0006699b	comb_ro_r59		RO	[7:0] LocalSumYBuf[11][7:0]

PRELIMINARY CONFIDENTIAL

Address	Register name	Default value	R/W	Descriptions
0x0006699c	comb_ro_r60		RO	[7:0] LocalSumYBuf[12][31:24]
0x0006699d	comb_ro_r61		RO	[7:0] LocalSumYBuf[12][23:16]
0x0006699e	comb_ro_r62		RO	[7:0] LocalSumYBuf[12][15:8]
0x0006699f	comb_ro_r63		RO	[7:0] LocalSumYBuf[12][7:0]
0x000669a0	comb_ro_r64		RO	[7:0] LocalSumYBuf[13][31:24]
0x000669a1	comb_ro_r65		RO	[7:0] LocalSumYBuf[13][23:16]
0x000669a2	comb_ro_r66		RO	[7:0] LocalSumYBuf[13][15:8]
0x000669a3	comb_ro_r67		RO	[7:0] LocalSumYBuf[13][7:0]
0x000669a4	comb_ro_r68		RO	[7:0] LocalSumYBuf[14][31:24]
0x000669a5	comb_ro_r69		RO	[7:0] LocalSumYBuf[14][23:16]
0x000669a6	comb_ro_r70		RO	[7:0] LocalSumYBuf[14][15:8]
0x000669a7	comb_ro_r71		RO	[7:0] LocalSumYBuf[14][7:0]
0x000669a8	comb_ro_r72		RO	[7:0] LocalSumYBuf[15][31:24]
0x000669a9	comb_ro_r73		RO	[7:0] LocalSumYBuf[15][23:16]
0x000669aa	comb_ro_r74		RO	[7:0] LocalSumYBuf[15][15:8]
0x000669ab	comb_ro_r75		RO	[7:0] LocalSumYBuf[15][7:0]
0x000669ac	comb_ro_r76		RO	[7:0] LocalSumYBuf[16][31:24]
0x000669ad	comb_ro_r77		RO	[7:0] LocalSumYBuf[16][23:16]
0x000669ae	comb_ro_r78		RO	[7:0] LocalSumYBuf[16][15:8]
0x000669af	comb_ro_r79		RO	[7:0] LocalSumYBuf[16][7:0]
0x000669b0	comb_ro_r80		RO	[7:0] LocalSumYBuf[17][31:24]
0x000669b1	comb_ro_r81		RO	[7:0] LocalSumYBuf[17][23:16]
0x000669b2	comb_ro_r82		RO	[7:0] LocalSumYBuf[17][15:8]
0x000669b3	comb_ro_r83		RO	[7:0] LocalSumYBuf[17][7:0]
0x000669b4	comb_ro_r84		RO	[7:0] LocalSumYBuf[18][31:24]
0x000669b5	comb_ro_r85		RO	[7:0] LocalSumYBuf[18][23:16]
0x000669b6	comb_ro_r86		RO	[7:0] LocalSumYBuf[18][15:8]
0x000669b7	comb_ro_r87		RO	[7:0] LocalSumYBuf[18][7:0]

PRELIMINARY CONFIDENTIAL

Address	Register name	Default value	R/W	Descriptions
0x000669b8	comb_ro_r88		RO	[7:0] LocalSumYBuf[19][31:24]
0x000669b9	comb_ro_r89		RO	[7:0] LocalSumYBuf[19][23:16]
0x000669ba	comb_ro_r90		RO	[7:0] LocalSumYBuf[19][15:8]
0x000669bb	comb_ro_r91		RO	[7:0] LocalSumYBuf[19][7:0]
0x000669bc	comb_ro_r92		RO	[7:0] LocalSumYBuf[20][31:24]
0x000669bd	comb_ro_r93		RO	[7:0] LocalSumYBuf[20][23:16]
0x000669be	comb_ro_r94		RO	[7:0] LocalSumYBuf[20][15:8]
0x000669bf	comb_ro_r95		RO	[7:0] LocalSumYBuf[20][7:0]
0x000669c0	comb_ro_r96		RO	[7:0] LocalSumYBuf[21][31:24]
0x000669c1	comb_ro_r97		RO	[7:0] LocalSumYBuf[21][23:16]
0x000669c2	comb_ro_r98		RO	[7:0] LocalSumYBuf[21][15:8]
0x000669c3	comb_ro_r99		RO	[7:0] LocalSumYBuf[21][7:0]
0x000669c4	comb_ro_r100		RO	[7:0] LocalSumYBuf[22][31:24]
0x000669c5	comb_ro_r101		RO	[7:0] LocalSumYBuf[22][23:16]
0x000669c6	comb_ro_r102		RO	[7:0] LocalSumYBuf[22][15:8]
0x000669c7	comb_ro_r103		RO	[7:0] LocalSumYBuf[22][7:0]
0x000669c8	comb_ro_r104		RO	[7:0] LocalSumYBuf[23][31:24]
0x000669c9	comb_ro_r105		RO	[7:0] LocalSumYBuf[23][23:16]
0x000669ca	comb_ro_r106		RO	[7:0] LocalSumYBuf[23][15:8]
0x000669cb	comb_ro_r107		RO	[7:0] LocalSumYBuf[23][7:0]
0x000669cc	comb_ro_r108		RO	[7:0] LocalSumYBuf[24][31:24]
0x000669cd	comb_ro_r109		RO	[7:0] LocalSumYBuf[24][23:16]
0x000669ce	comb_ro_r110		RO	[7:0] LocalSumYBuf[24][15:8]
0x000669cf	comb_ro_r111		RO	[7:0] LocalSumYBuf[24][7:0]
0x000669d0	comb_ro_r112		RO	[7:0] LocalSumYBuf[25][31:24]
0x000669d1	comb_ro_r113		RO	[7:0] LocalSumYBuf[25][23:16]
0x000669d2	comb_ro_r114		RO	[7:0] LocalSumYBuf[25][15:8]
0x000669d3	comb_ro_r115		RO	[7:0] LocalSumYBuf[25][7:0]

PRELIMINARY CONFIDENTIAL

Address	Register name	Default value	R/W	Descriptions
0x000669d4	comb_ro_r116		RO	[7:0] LocalSumYBuf[26][31:24]
0x000669d5	comb_ro_r117		RO	[7:0] LocalSumYBuf[26][23:16]
0x000669d6	comb_ro_r118		RO	[7:0] LocalSumYBuf[26][15:8]
0x000669d7	comb_ro_r119		RO	[7:0] LocalSumYBuf[26][7:0]
0x000669d8	comb_ro_r120		RO	[7:0] LocalSumYBuf[27][31:24]
0x000669d9	comb_ro_r121		RO	[7:0] LocalSumYBuf[27][23:16]
0x000669da	comb_ro_r122		RO	[7:0] LocalSumYBuf[27][15:8]
0x000669db	comb_ro_r123		RO	[7:0] LocalSumYBuf[27][7:0]
0x000669dc	comb_ro_r124		RO	[7:0] LocalSumYBuf[28][31:24]
0x000669dd	comb_ro_r125		RO	[7:0] LocalSumYBuf[28][23:16]
0x000669de	comb_ro_r126		RO	[7:0] LocalSumYBuf[28][15:8]
0x000669df	comb_ro_r127		RO	[7:0] LocalSumYBuf[28][7:0]
0x000669e0	comb_ro_r128		RO	[7:0] LocalSumYBuf[29][31:24]
0x000669e1	comb_ro_r129		RO	[7:0] LocalSumYBuf[29][23:16]
0x000669e2	comb_ro_r130		RO	[7:0] LocalSumYBuf[29][15:8]
0x000669e3	comb_ro_r131		RO	[7:0] LocalSumYBuf[29][7:0]
0x000669e4	comb_ro_r132		RO	[7:0] LocalSumYBuf[30][31:24]
0x000669e5	comb_ro_r133		RO	[7:0] LocalSumYBuf[30][23:16]
0x000669e6	comb_ro_r134		RO	[7:0] LocalSumYBuf[30][15:8]
0x000669e7	comb_ro_r135		RO	[7:0] LocalSumYBuf[30][7:0]
0x000669e8	comb_ro_r136		RO	[7:0] LocalSumYBuf[31][31:24]
0x000669e9	comb_ro_r137		RO	[7:0] LocalSumYBuf[31][23:16]
0x000669ea	comb_ro_r138		RO	[7:0] LocalSumYBuf[31][15:8]
0x000669eb	comb_ro_r139		RO	[7:0] LocalSumYBuf[31][7:0]
0x000669ec	comb_ro_r140		RO	[7:0] LocalSumYBuf[32][31:24]
0x000669ed	comb_ro_r141		RO	[7:0] LocalSumYBuf[32][23:16]
0x000669ee	comb_ro_r142		RO	[7:0] LocalSumYBuf[32][15:8]
0x000669ef	comb_ro_r143		RO	[7:0] LocalSumYBuf[32][7:0]

PRELIMINARY CONFIDENTIAL

Address	Register name	Default value	R/W	Descriptions
0x000669f0	comb_ro_r144		RO	[7:0] LocalSumYBuf[33][31:24]
0x000669f1	comb_ro_r145		RO	[7:0] LocalSumYBuf[33][23:16]
0x000669f2	comb_ro_r146		RO	[7:0] LocalSumYBuf[33][15:8]
0x000669f3	comb_ro_r147		RO	[7:0] LocalSumYBuf[33][7:0]
0x000669f4	comb_ro_r148		RO	[7:0] LocalSumYBuf[34][31:24]
0x000669f5	comb_ro_r149		RO	[7:0] LocalSumYBuf[34][23:16]
0x000669f6	comb_ro_r150		RO	[7:0] LocalSumYBuf[34][15:8]
0x000669f7	comb_ro_r151		RO	[7:0] LocalSumYBuf[34][7:0]
0x000669f8	comb_ro_r152		RO	[7:0] LocalSumYBuf[35][31:24]
0x000669f9	comb_ro_r153		RO	[7:0] LocalSumYBuf[35][23:16]
0x000669fa	comb_ro_r154		RO	[7:0] LocalSumYBuf[35][15:8]
0x000669fb	comb_ro_r155		RO	[7:0] LocalSumYBuf[35][7:0]
0x000669fc	comb_ro_r156		RO	[7:0] LocalSumYBuf[36][31:24]
0x000669fd	comb_ro_r157		RO	[7:0] LocalSumYBuf[36][23:16]
0x000669fe	comb_ro_r158		RO	[7:0] LocalSumYBuf[36][15:8]
0x000669ff	comb_ro_r159		RO	[7:0] LocalSumYBuf[36][7:0]
0x00066a00	comb_ro_r160		RO	[7:0] LocalSumYBuf[37][31:24]
0x00066a01	comb_ro_r161		RO	[7:0] LocalSumYBuf[37][23:16]
0x00066a02	comb_ro_r162		RO	[7:0] LocalSumYBuf[37][15:8]
0x00066a03	comb_ro_r163		RO	[7:0] LocalSumYBuf[37][7:0]
0x00066a04	comb_ro_r164		RO	[7:0] LocalSumYBuf[38][31:24]
0x00066a05	comb_ro_r165		RO	[7:0] LocalSumYBuf[38][23:16]
0x00066a06	comb_ro_r166		RO	[7:0] LocalSumYBuf[38][15:8]
0x00066a07	comb_ro_r167		RO	[7:0] LocalSumYBuf[38][7:0]
0x00066a08	comb_ro_r168		RO	[7:0] LocalSumYBuf[39][31:24]
0x00066a09	comb_ro_r169		RO	[7:0] LocalSumYBuf[39][23:16]
0x00066a0a	comb_ro_r170		RO	[7:0] LocalSumYBuf[39][15:8]
0x00066a0b	comb_ro_r171		RO	[7:0] LocalSumYBuf[39][7:0]

PRELIMINARY CONFIDENTIAL

Address	Register name	Default value	R/W	Descriptions
0x00066a0c	comb_ro_r172		RO	[7:0] LocalSumYBuf[40][31:24]
0x00066a0d	comb_ro_r173		RO	[7:0] LocalSumYBuf[40][23:16]
0x00066a0e	comb_ro_r174		RO	[7:0] LocalSumYBuf[40][15:8]
0x00066a0f	comb_ro_r175		RO	[7:0] LocalSumYBuf[40][7:0]
0x00066a10	comb_ro_r176		RO	[7:0] LocalSumYBuf[41][31:24]
0x00066a11	comb_ro_r177		RO	[7:0] LocalSumYBuf[41][23:16]
0x00066a12	comb_ro_r178		RO	[7:0] LocalSumYBuf[41][15:8]
0x00066a13	comb_ro_r179		RO	[7:0] LocalSumYBuf[41][7:0]
0x00066a14	comb_ro_r180		RO	[7:0] LocalSumYBuf[42][31:24]
0x00066a15	comb_ro_r181		RO	[7:0] LocalSumYBuf[42][23:16]
0x00066a16	comb_ro_r182		RO	[7:0] LocalSumYBuf[42][15:8]
0x00066a17	comb_ro_r183		RO	[7:0] LocalSumYBuf[42][7:0]
0x00066a18	comb_ro_r184		RO	[7:0] LocalSumYBuf[43][31:24]
0x00066a19	comb_ro_r185		RO	[7:0] LocalSumYBuf[43][23:16]
0x00066a1a	comb_ro_r186		RO	[7:0] LocalSumYBuf[43][15:8]
0x00066a1b	comb_ro_r187		RO	[7:0] LocalSumYBuf[43][7:0]
0x00066a1c	comb_ro_r188		RO	[7:0] LocalSumYBuf[44][31:24]
0x00066a1d	comb_ro_r189		RO	[7:0] LocalSumYBuf[44][23:16]
0x00066a1e	comb_ro_r190		RO	[7:0] LocalSumYBuf[44][15:8]
0x00066a1f	comb_ro_r191		RO	[7:0] LocalSumYBuf[44][7:0]
0x00066a20	comb_ro_r192		RO	[7:0] LocalSumYBuf[45][31:24]
0x00066a21	comb_ro_r193		RO	[7:0] LocalSumYBuf[45][23:16]
0x00066a22	comb_ro_r194		RO	[7:0] LocalSumYBuf[45][15:8]
0x00066a23	comb_ro_r195		RO	[7:0] LocalSumYBuf[45][7:0]
0x00066a24	comb_ro_r196		RO	[7:0] LocalSumYBuf[46][31:24]
0x00066a25	comb_ro_r197		RO	[7:0] LocalSumYBuf[46][23:16]
0x00066a26	comb_ro_r198		RO	[7:0] LocalSumYBuf[46][15:8]
0x00066a27	comb_ro_r199		RO	[7:0] LocalSumYBuf[46][7:0]

PRELIMINARY CONFIDENTIAL

Address	Register name	Default value	R/W	Descriptions
0x00066a28	comb_ro_r200		RO	[7:0] LocalSumYBuf[47][31:24]
0x00066a29	comb_ro_r201		RO	[7:0] LocalSumYBuf[47][23:16]
0x00066a2a	comb_ro_r202		RO	[7:0] LocalSumYBuf[47][15:8]
0x00066a2b	comb_ro_r203		RO	[7:0] LocalSumYBuf[47][7:0]
0x00066a2c	comb_ro_r204		RO	[7:2] reserved [1:0] nCutBlackLevel[9:8]
0x00066a2d	comb_ro_r205		RO	[7:0] nCutBlackLevel[7:0]

6.14 Combine Register (MCU Write)

Address	Register name	Default value	R/W	Descriptions
0x00066cd0	comb_rw_r000	8'h00	RW	[7:0] nLogE[15:8]
0x00066cd1	comb_rw_r001	8'h00	RW	[7:0] nLogE[7:0]
0x00066cd2	comb_rw_r002	8'h00	RW	[7:6] reserved [5:0] pAWBLogRatio[0][13:8]
0x00066cd3	comb_rw_r003	8'h00	RW	[7:0] pAWBLogRatio[0][7:0]
0x00066cd4	comb_rw_r004	8'h00	RW	[7:6] reserved [5:0] pAWBLogRatio[1][13:8]
0x00066cd5	comb_rw_r005	8'h00	RW	[7:0] pAWBLogRatio[1][7:0]
0x00066cd6	comb_rw_r006	8'h00	RW	[7:6] reserved [5:0] pAWBLogRatio[2][13:8]
0x00066cd7	comb_rw_r007	8'h00	RW	[7:0] pAWBLogRatio[2][7:0]
0x00066cd8	comb_rw_r008	8'h15	RW	[7] reserved [6:0] nGlobalLogRatio[14:8]
0x00066cd9	comb_rw_r009	8'h97	RW	[7:0] nGlobalLogRatio[7:0]
0x00066cda	comb_rw_r010	8'h55	RW	[7:0] nDarkBoostYThre1[15:8]
0x00066cdb	comb_rw_r011	8'h97	RW	[7:0] nDarkBoostYThre1[7:0]
0x00066cdc	comb_rw_r012	8'h5d	RW	[7:0] nDarkBoostYThre2[15:8]
0x00066cdd	comb_rw_r013	8'h97	RW	[7:0] nDarkBoostYThre2[7:0]

PRELIMINARY CONFIDENTIAL

Address	Register name	Default value	R/W	Descriptions
0x00066cde	comb_rw_r014	3'h00	RW	[7:3] reserved [2:0] pLocalGainBuf[0][10:8]
0x00066cdf	comb_rw_r015	8'h00	RW	[7:0] pLocalGainBuf[0][7:0]
0x00066ce0	comb_rw_r016	3'h00	RW	[7:3] reserved [2:0] pLocalGainBuf[1][10:8]
0x00066ce1	comb_rw_r017	8'h00	RW	[7:0] pLocalGainBuf[1][7:0]
0x00066ce2	comb_rw_r018	3'h00	RW	[7:3] reserved [2:0] pLocalGainBuf[2][10:8]
0x00066ce3	comb_rw_r019	8'h00	RW	[7:0] pLocalGainBuf[2][7:0]
0x00066ce4	comb_rw_r020	3'h00	RW	[7:3] reserved [2:0] pLocalGainBuf[3][10:8]
0x00066ce5	comb_rw_r021	8'h00	RW	pLocalGainBuf[3][7:0]
0x00066ce6	comb_rw_r022	3'h00	RW	[7:3] reserved [2:0] pLocalGainBuf[4][10:8]
0x00066ce7	comb_rw_r023	8'h00	RW	[7:0] pLocalGainBuf[4][7:0]
0x00066ce8	comb_rw_r024	3'h00	RW	[7:3] reserved [2:0] pLocalGainBuf[5][10:8]
0x00066ce9	comb_rw_r025	8'h00	RW	[7:0] pLocalGainBuf[5][7:0]
0x00066cea	comb_rw_r026	3'h00	RW	[7:3] reserved [2:0] pLocalGainBuf[6][10:8]
0x00066ceb	comb_rw_r027	8'h00	RW	[7:0] pLocalGainBuf[6][7:0]
0x00066cec	comb_rw_r028	3'h00	RW	[7:3] reserved [2:0] pLocalGainBuf[7][10:8]
0x00066ced	comb_rw_r029	8'h00	RW	[7:0] pLocalGainBuf[7][7:0]
0x00066cee	comb_rw_r030	3'h00	RW	[7:3] reserved [2:0] pLocalGainBuf[8][10:8]
0x00066cef	comb_rw_r031	8'h00	RW	[7:0] pLocalGainBuf[8][7:0]
0x00066cf0	comb_rw_r032	3'h00	RW	[7:3] reserved [2:0] pLocalGainBuf[9][10:8]
0x00066cf1	comb_rw_r033	8'h00	RW	[7:0] pLocalGainBuf[9][7:0]
0x00066cf2	comb_rw_r034	3'h00	RW	[7:3] reserved

PRELIMINARY CONFIDENTIAL

Address	Register name	Default value	R/W	Descriptions
				[2:0] pLocalGainBuf[10][10:8]
0x00066cf3	comb_rw_r035	8'h00	RW	[7:0] pLocalGainBuf[10][7:0]
0x00066cf4	comb_rw_r036	3'h00	RW	[7:3] reserved [2:0] pLocalGainBuf[11][10:8]
0x00066cf5	comb_rw_r037	8'h00	RW	[7:0] pLocalGainBuf[11][7:0]
0x00066cf6	comb_rw_r038	3'h00	RW	[7:3] reserved [2:0] pLocalGainBuf[12][10:8]
0x00066cf7	comb_rw_r039	8'h00	RW	[7:0] pLocalGainBuf[12][7:0]
0x00066cf8	comb_rw_r040	3'h00	RW	[7:3] reserved [2:0] pLocalGainBuf[13][10:8]
0x00066cf9	comb_rw_r041	8'h00	RW	[7:0] pLocalGainBuf[13][7:0]
0x00066cfa	comb_rw_r042	3'h00	RW	[7:3] reserved [2:0] pLocalGainBuf[14][10:8]
0x00066cfb	comb_rw_r043	8'h00	RW	[7:0] pLocalGainBuf[14][7:0]
0x00066cfc	comb_rw_r044	3'h00	RW	[7:3] reserved [2:0] pLocalGainBuf[15][10:8]
0x00066cfd	comb_rw_r045	8'h00	RW	[7:0] pLocalGainBuf[15][7:0]
0x00066cfe	comb_rw_r046	3'h00	RW	[7:3] reserved [2:0] pLocalGainBuf[16][10:8]
0x00066cff	comb_rw_r047	8'h00	RW	[7:0] pLocalGainBuf[16][7:0]
0x00066d00	comb_rw_r048	3'h00	RW	[7:3] reserved [2:0] pLocalGainBuf[17][10:8]
0x00066d01	comb_rw_r049	8'h00	RW	[7:0] pLocalGainBuf[17][7:0]
0x00066d02	comb_rw_r050	3'h00	RW	[7:3] reserved [2:0] pLocalGainBuf[18][10:8]
0x00066d03	comb_rw_r051	8'h00	RW	[7:0] pLocalGainBuf[18][7:0]
0x00066d04	comb_rw_r052	3'h00	RW	[7:3] reserved [2:0] pLocalGainBuf[19][10:8]
0x00066d05	comb_rw_r053	8'h00	RW	[7:0] pLocalGainBuf[19][7:0]
0x00066d06	comb_rw_r054	3'h00	RW	[7:3] reserved [2:0] pLocalGainBuf[20][10:8]

PRELIMINARY CONFIDENTIAL

Address	Register name	Default value	R/W	Descriptions
0x00066d07	comb_rw_r055	8'h00	RW	[7:0] pLocalGainBuf[20][7:0]
0x00066d08	comb_rw_r056	3'h00	RW	[7:3] reserved [2:0] pLocalGainBuf[21][10:8]
0x00066d09	comb_rw_r057	8'h00	RW	[7:0] pLocalGainBuf[21][7:0]
0x00066d0a	comb_rw_r058	3'h00	RW	[7:3] reserved [2:0] pLocalGainBuf[22][10:8]
0x00066d0b	comb_rw_r059	8'h00	RW	[7:0] pLocalGainBuf[22][7:0]
0x00066d0c	comb_rw_r060	3'h00	RW	[7:3] reserved [2:0] pLocalGainBuf[23][10:8]
0x00066d0d	comb_rw_r061	8'h00	RW	[7:0] pLocalGainBuf[23][7:0]
0x00066d0e	comb_rw_r062	3'h00	RW	[7:3] reserved [2:0] pLocalGainBuf[24][10:8]
0x00066d0f	comb_rw_r063	8'h00	RW	[7:0] pLocalGainBuf[24][7:0]
0x00066d10	comb_rw_r064	3'h00	RW	[7:3] reserved [2:0] pLocalGainBuf[25][10:8]
0x00066d11	comb_rw_r065	8'h00	RW	[7:0] pLocalGainBuf[25][7:0]
0x00066d12	comb_rw_r066	3'h00	RW	[7:3] reserved [2:0] pLocalGainBuf[26][10:8]
0x00066d13	comb_rw_r067	8'h00	RW	[7:0] pLocalGainBuf[26][7:0]
0x00066d14	comb_rw_r068	3'h00	RW	[7:3] reserved [2:0] pLocalGainBuf[27][10:8]
0x00066d15	comb_rw_r069	8'h00	RW	[7:0] pLocalGainBuf[27][7:0]
0x00066d16	comb_rw_r070	3'h00	RW	[7:3] reserved [2:0] pLocalGainBuf[28][10:8]
0x00066d17	comb_rw_r071	8'h00	RW	[7:0] pLocalGainBuf[28][7:0]
0x00066d18	comb_rw_r072	3'h00	RW	[7:3] reserved [2:0] pLocalGainBuf[29][10:8]
0x00066d19	comb_rw_r073	8'h00	RW	[7:0] pLocalGainBuf[29][7:0]
0x00066d1a	comb_rw_r074	3'h00	RW	[7:3] reserved [2:0] pLocalGainBuf[30][10:8]
0x00066d1b	comb_rw_r075	8'h00	RW	[7:0] pLocalGainBuf[30][7:0]

PRELIMINARY CONFIDENTIAL

Address	Register name	Default value	R/W	Descriptions
0x00066d1c	comb_rw_r076	3'h00	RW	[7:3] reserved [2:0] pLocalGainBuf[31][10:8]
0x00066d1d	comb_rw_r077	8'h00	RW	[7:0] pLocalGainBuf[31][7:0]
0x00066d1e	comb_rw_r078	3'h00	RW	[7:3] reserved [2:0] pLocalGainBuf[32][10:8]
0x00066d1f	comb_rw_r079	8'h00	RW	[7:0] pLocalGainBuf[32][7:0]
0x00066d20	comb_rw_r080	3'h00	RW	[7:3] reserved [2:0] pLocalGainBuf[33][10:8]
0x00066d21	comb_rw_r081	8'h00	RW	[7:0] pLocalGainBuf[33][7:0]
0x00066d22	comb_rw_r082	3'h00	RW	[7:3] reserved [2:0] pLocalGainBuf[34][10:8]
0x00066d23	comb_rw_r083	8'h00	RW	[7:0] pLocalGainBuf[34][7:0]
0x00066d24	comb_rw_r084	3'h00	RW	[7:3] reserved [2:0] pLocalGainBuf[35][10:8]
0x00066d25	comb_rw_r085	8'h00	RW	[7:0] pLocalGainBuf[35][7:0]
0x00066d26	comb_rw_r086	3'h00	RW	[7:3] reserved [2:0] pLocalGainBuf[36][10:8]
0x00066d27	comb_rw_r087	8'h00	RW	[7:0] pLocalGainBuf[36][7:0]
0x00066d28	comb_rw_r088	3'h00	RW	[7:3] reserved [2:0] pLocalGainBuf[37][10:8]
0x00066d29	comb_rw_r089	8'h00	RW	[7:0] pLocalGainBuf[37][7:0]
0x00066d2a	comb_rw_r090	3'h00	RW	[7:3] reserved [2:0] pLocalGainBuf[38][10:8]
0x00066d2b	comb_rw_r091	8'h00	RW	[7:0] pLocalGainBuf[38][7:0]
0x00066d2c	comb_rw_r092	3'h00	RW	[7:3] reserved [2:0] pLocalGainBuf[39][10:8]
0x00066d2d	comb_rw_r093	8'h0	RW	[7:0] pLocalGainBuf[39][7:0]
0x00066d2e	comb_rw_r094	3'h00	RW	[7:3] reserved [2:0] pLocalGainBuf[40][10:8]
0x00066d2f	comb_rw_r095	8'h00	RW	[7:0] pLocalGainBuf[40][7:0]

PRELIMINARY CONFIDENTIAL

Address	Register name	Default value	R/W	Descriptions
0x00066d30	comb_rw_r096	3'h00	RW	[7:3] reserved [2:0] pLocalGainBuf[41][10:8]
0x00066d31	comb_rw_r097	8'h00	RW	[7:0] pLocalGainBuf[41][7:0]
0x00066d32	comb_rw_r098	3'h00	RW	[7:3] reserved [2:0] pLocalGainBuf[42][10:8]
0x00066d33	comb_rw_r099	8'h00	RW	[7:0] pLocalGainBuf[42][7:0]
0x00066d34	comb_rw_r100	3'h00	RW	[7:3] reserved [2:0] pLocalGainBuf[43][10:8]
0x00066d35	comb_rw_r101	8'h00	RW	[7:0] pLocalGainBuf[43][7:0]
0x00066d36	comb_rw_r102	3'h00	RW	[7:3] reserved [2:0] pLocalGainBuf[44][10:8]
0x00066d37	comb_rw_r103	8'h00	RW	[7:0] pLocalGainBuf[44][7:0]
0x00066d38	comb_rw_r104	3'h00	RW	[7:3] reserved [2:0] pLocalGainBuf[45][10:8]
0x00066d39	comb_rw_r105	8'h00	RW	[7:0] pLocalGainBuf[45][7:0]
0x00066d3a	comb_rw_r106	3'h00	RW	[7:3] reserved [2:0] pLocalGainBuf[46][10:8]
0x00066d3b	comb_rw_r107	8'h00	RW	[7:0] pLocalGainBuf[46][7:0]
0x00066d3c	comb_rw_r108	3'h00	RW	[7:3] reserved [2:0] pLocalGainBuf[47][10:8]
0x00066d3d	comb_rw_r109	8'h00	RW	[7:0] pLocalGainBuf[47][7:0]
0x00066d3e	comb_rw_r110	3'h00	RW	[7:3] reserved [2:0] pLocalGainBuf[48][10:8]
0x00066d3f	comb_rw_r111	8'h00	RW	[7:0] pLocalGainBuf[48][7:0]
0x00066d40	comb_rw_r112	3'h00	RW	[7:3] reserved [2:0] pLocalGainBuf[49][10:8]
0x00066d41	comb_rw_r113	8'h00	RW	[7:0] pLocalGainBuf[49][7:0]
0x00066d42	comb_rw_r114	3'h00	RW	[7:3] reserved [2:0] pLocalGainBuf[50][10:8]
0x00066d43	comb_rw_r115	8'h00	RW	[7:0] pLocalGainBuf[50][7:0]

PRELIMINARY CONFIDENTIAL

Address	Register name	Default value	R/W	Descriptions
0x00066d44	comb_rw_r116	3'h00	RW	[7:3] reserved [2:0] pLocalGainBuf[51][10:8]
0x00066d45	comb_rw_r117	8'h00	RW	[7:0] pLocalGainBuf[51][7:0]
0x00066d46	comb_rw_r118	3'h00	RW	[7:3] reserved [2:0] pLocalGainBuf[52][10:8]
0x00066d47	comb_rw_r119	8'h00	RW	[7:0] pLocalGainBuf[52][7:0]
0x00066d48	comb_rw_r120	3'h00	RW	[7:3] reserved [2:0] pLocalGainBuf[53][10:8]
0x00066d49	comb_rw_r121	8'h00	RW	[7:0] pLocalGainBuf[53][7:0]
0x00066d4a	comb_rw_r122	3'h00	RW	[7:3] reserved [2:0] pLocalGainBuf[54][10:8]
0x00066d4b	comb_rw_r123	8'h00	RW	[7:0] pLocalGainBuf[54][7:0]
0x00066d4c	comb_rw_r124	3'h00	RW	[7:3] reserved [2:0] pLocalGainBuf[55][10:8]
0x00066d4d	comb_rw_r125	8'h00	RW	[7:0] pLocalGainBuf[55][7:0]
0x00066d4e	comb_rw_r126	3'h00	RW	[7:3] reserved [2:0] pLocalGainBuf[56][10:8]
0x00066d4f	comb_rw_r127	8'h00	RW	[7:0] pLocalGainBuf[56][7:0]
0x00066d50	comb_rw_r128	3'h00	RW	[7:3] reserved [2:0] pLocalGainBuf[57][10:8]
0x00066d51	comb_rw_r129	8'h00	RW	[7:0] pLocalGainBuf[57][7:0]
0x00066d52	comb_rw_r130	3'h00	RW	[7:3] reserved [2:0] pLocalGainBuf[58][10:8]
0x00066d53	comb_rw_r131	8'h00	RW	[7:0] pLocalGainBuf[58][7:0]
0x00066d54	comb_rw_r132	3'h00	RW	[7:3] reserved [2:0] pLocalGainBuf[59][10:8]
0x00066d55	comb_rw_r133	8'h00	RW	[7:0] pLocalGainBuf[59][7:0]
0x00066d56	comb_rw_r134	3'h00	RW	[7:3] reserved [2:0] pLocalGainBuf[60][10:8]
0x00066d57	comb_rw_r135	8'h00	RW	[7:0] pLocalGainBuf[60][7:0]

PRELIMINARY CONFIDENTIAL

Address	Register name	Default value	R/W	Descriptions
0x00066d58	comb_rw_r136	3'h00	RW	[7:3] reserved [2:0] pLocalGainBuf[61][10:8]
0x00066d59	comb_rw_r137	8'h00	RW	[7:0] pLocalGainBuf[61][7:0]
0x00066d5a	comb_rw_r138	3'h00	RW	[7:3] reserved [2:0] pLocalGainBuf[62][10:8]
0x00066d5b	comb_rw_r139	8'h00	RW	[7:0] pLocalGainBuf[62][7:0]
0x00066d5c	comb_rw_r140	8'h50	RW	[7:0] nLogYMax[15:8]
0x00066d5d	comb_rw_r141	8'h00	RW	[7:0] nLogYMax[7:0]
0x00066d5e	comb_rw_r142	8'h50	RW	[7:0] nLogXMax[15:8]
0x00066d5f	comb_rw_r143	8'h00	RW	[7:0] nLogXMax[7:0]
0x00066d60				reserved
0x00066d61				reserved
0x00066d62	comb_rw_r146	8'h00	RW	[7] reserved [6:0] nGlobalLogHDRGain[14:8]
0x00066d63	comb_rw_r147	8'h00	RW	nGlobalLogHDRGain[7:0]
0x00066d64	comb_rw_r148	8'h04	RW	[7:3] reserved [2:0] nGlobalLogHDRGamma[10:8]
0x00066d65	comb_rw_r149	8'h00	RW	[7:0] nGlobalLogHDRGamma[7:0]
0x00066d66	comb_rw_r150	8'h01	RW	[7:1] reserved [0] nInverseRGBGamma[8]
0x00066d67	comb_rw_r151	8'hd1	RW	[7:0] nInverseRGBGamma[7:0]
0x00066d68	comb_rw_r152	8'h01	RW	[7:0] nLogMaxYUVGammaGain[15:8]
0x00066d69	comb_rw_r153	8'h5c	RW	[7:0] nLogMaxYUVGammaGain[7:0]
0x00066d6a	comb_rw_r154	8'h10	RW	[7:6] reserved [5:0] nLogMaxRGBGammaGain[13:8]
0x00066d6b	comb_rw_r155	8'h00	RW	[7:0] nLogMaxRGBGammaGain[7:0]
0x00066d6c				reserved
0x00066d6d	comb_rw_r157	8'h00	RW	[7:2] reserved [1:0] nOutputRange[17:16]

PRELIMINARY CONFIDENTIAL

Address	Register name	Default value	R/W	Descriptions
0x00066d6e	comb_rw_r158	8'h19	RW	[7:0] nOutputRange[15:8]
0x00066d6f	comb_rw_r159	8'hf9	RW	[7:0] nOutputRange[7:0]

6.15 Normalize Register

Address	Register name	Default value	R/W	Descriptions
0x00065900	NML_00	5'h01	RW	[7:6] reserved [5] psthre manual enable [4:0] step
0x00065901	NML_01	7'h04	RW	[7] reserved [6:0] max_low_level: 16 ~ 127
0x00065902	NML_02	8'hfc	RW	[7:0] min_low_level : -128 to -16, complementary code
0x00065903	NML_03	6'h01	RW	[7:6] reserved [5:0] m_nPsPer
0x00065904				reserved
0x00065905	NML_05	8'h0b	RW	[7:4] reserved [3] Statistic Left sensor image [2:0] UV Gain Step
0x00065906	NML_06		RO	[7:1] reserved [0] low_pre_sum[24]
0x00065907	NML_07		RO	[7:0] low_pre_sum[23:16]
0x00065908	NML_08		RO	[7:0] low_pre_sum[15:8]
0x00065909	NML_09		RO	[7:0] low_pre_sum[7:0]
0x0006590a	NML_0a		RO	[7:1] reserved [0] low_next_sum[24]
0x0006590b	NML_0b		RO	[7:0] low_next_sum[23:16]
0x0006590c	NML_0c		RO	[7:0] low_next_sum[15:8]
0x0006590d	NML_0d		RO	[7:0] low_next_sum[7:0]
0x0006590e	NML_0e		RO	[7:5] reserved [4:0] psthre[20:16]

PRELIMINARY CONFIDENTIAL

Address	Register name	Default value	R/W	Descriptions
0x0006590f	NML_0f		RO	[7:0] psthre[15:8]
0x00065910	NML_10		RO	[7:0] psthre[7:0]
0x00065912	NML_12	8'h00	RW	[7:5] reserved [4:0] manual psthre[20:16]
0x00065913	NML_13	8'h01	RW	[7:0] manual psthre[15:8]
0x00065914	NML_14	8'h2c	RW	[7:0] manual psthre[7:0]

6.16 Normalize Register (MCU Read)

Address	Register name	Default value	R/W	Descriptions
0x00066a34	NML_R01		RO	[7:0] Curlowlevel[7:0] (2's Complement,ranges in -128~127)
0x00066a35	NML_R02		RO	reserved
0x00066a36	NML_R03		RO	reserved
0x00066a37	NML_R04		RO	reserved

6.17 Normalize Register (MCU Write)

Address	Register name	Default value	R/W	Descriptions
0x00066d70			RW	reserved
0x00066d71	NML_W00	8'h00	RW	[7:6] reserved [5:0] NormalizeGain[21:16]
0x00066d72	NML_W01	8'h40	RW	[7:0] NormalizeGain[15:8]
0x00066d73	NML_W02	8'h08	RW	[7:0] NormalizeGain[7:0]
0x00066d74			RW	reserved
0x00066d75	NML_W03	8'h00	RW	[7:2] reserved [1:0] HDROffset[17:16]
0x00066d76	NML_W04	8'h00	RW	[7:0] HDROffset[15:8]

PRELIMINARY CONFIDENTIAL

Address	Register name	Default value	R/W	Descriptions
0x00066d77	NML_W05	8'h02	RW	[7:0] HDROffset[7:0]

6.18 Tone Mapping Register

Address	Register name	Default value	R/W	Descriptions
0x00065a00	TMP_00	4'h0b	RW	[7:4] reserved [3] jpeg_cbcr_en 0: disable 1: enable [2:0] edge_thre 0: 16 1: 32 2: 64 3: 128 4: 256 5: 512
0x00065a01	TMP_01	6'hf5	RW	[7] dither_en [6] static_left [5] h_dark_en [4] uv_dark_en [3:2] h_dark_thre 00: 16 01: 32 10: 48 11: 64 [1:0] uv_dark_thre 00: 16 01: 32 10: 48 11: 64
0x00065a0a	TMP_0a	8'h00	RW	[7:0] debug_ctrl_0
0x00065a0b	TMP_0b	8'h00	RW	[7:0] debug_ctrl_1
0x00065a0c	TMP_0c	8'h00	RW	[7:0] debug_ctrl_2
0x00065a0d	TMP_0d	8'h00	RW	[7:1] reserved [0] debug_sram_freeze

PRELIMINARY CONFIDENTIAL

Address	Register name	Default value	R/W	Descriptions
0x00065a0e	TMP_0e	8'h00	RW	[7:0] debug_addr
0x00065a0f	TMP_0f		RO	[7:6] reserved [5:0] debug_sram_q[25:24]
0x00065a10	TMP_10		RO	[7:0] debug_sram_q[23:16]
0x00065a11	TMP_11		RO	[7:0] debug_sram_q[15:8]
0x00065a12	TMP_12		RO	[7:0] debug_sram_q[7:0]

6.19 Tone Mapping Register (MCU Read)

Address	Register name	Default value	R/W	Descriptions
0x00066a38	TMP_R01		RO	pIList0[7:0]
0x00066a39	TMP_R02		RO	pIList1[7:0]
0x00066a3a	TMP_R03		RO	pIList2[7:0]
0x00066a3b	TMP_R04		RO	pIList3[7:0]
0x00066a3c	TMP_R05		RO	pIList4[7:0]
0x00066a3d	TMP_R06		RO	pIList5[7:0]
0x00066a3e	TMP_R07		RO	pIList6[7:0]
0x00066a3f	TMP_R08		RO	pIList7[7:0]
0x00066a40	TMP_R09		RO	pIList8[7:0]
0x00066a41	TMP_R10		RO	pIList9[7:0]
0x00066a42	TMP_R11		RO	pIList10[7:0]
0x00066a43	TMP_R12		RO	pIList11[7:0]
0x00066a44	TMP_R13		RO	pIList12[7:0]
0x00066a45	TMP_R14		RO	pIList13[7:0]
0x00066a46	TMP_R15		RO	pIList14[7:0]
0x00066a47	TMP_R16		RO	pIList15[7:0]
0x00066a48	TMP_R17		RO	[7:5] reserved [4:0] nJ

PRELIMINARY CONFIDENTIAL

Address	Register name	Default value	R/W	Descriptions
0x00066a49	TMP_R18		RO	[7:1] reserved [0] calculation done
0x00066a4a	TMP_R19		RO	reserved
0x00066a4b	TMP_R20		RO	reserved

6.20 Tone Mapping Register (MCU Write)

Address	Register name	Default value	R/W	Descriptions
0x00066d78	TMP_RW01		RW	reserved
0x00066d79	TMP_RW02	2'h00	RW	[7:2] reserved [1:0] pCurveList0[17:16]
0x00066d7a	TMP_RW03	8'h40	RW	[7:0] pCurveList0[15:8]
0x00066d7b	TMP_RW04	8'h00	RW	[7:0] pCurveList0[7:0]
0x00066d7c	TMP_RW05		RW	reserved
0x00066d7d	TMP_RW06	2'h00	RW	[7:2] reserved [1:0] pCurveList1[17:16]
0x00066d7e	TMP_RW07	8'h80	RW	pCurveList1[15:8]
0x00066d7f	TMP_RW08	8'h00	RW	pCurveList1[7:0]
0x00066d80	TMP_RW09		RW	reserved
0x00066d81	TMP_RW10	2'h00	RW	[7:2] reserved [1:0] pCurveList2[17:16]
0x00066d82	TMP_RW11	8'hc0	RW	[7:0] pCurveList2[15:8]
0x00066d83	TMP_RW12	8'h00	RW	[7:0] pCurveList2[7:0]
0x00066d84	TMP_RW13		RW	reserved
0x00066d85	TMP_RW14	2'h01	RW	[7:2] reserved [1:0] pCurveList3[17:16]
0x00066d86	TMP_RW15	8'h00	RW	[7:0] pCurveList3[15:8]
0x00066d87	TMP_RW16	8'h00	RW	[7:0] pCurveList3[7:0]
0x00066d88	TMP_RW17		RW	reserved

PRELIMINARY CONFIDENTIAL

Address	Register name	Default value	R/W	Descriptions
0x00066d89	TMP_RW18	2'h01	RW	[7:2] reserved [1:0] pCurveList4[17:16]
0x00066d8a	TMP_RW19	8'h40	RW	[7:0] pCurveList4[15:8]
0x00066d8b	TMP_RW20	8'h00	RW	[7:0] pCurveList4[7:0]
0x00066d8c	TMP_RW21		RW	reserved
0x00066d8d	TMP_RW22	2'h01	RW	[7:2] reserved [1:0] pCurveList5[17:16]
0x00066d8e	TMP_RW23	8'h80	RW	[7:0] pCurveList5[15:8]
0x00066d8f	TMP_RW24	8'h00	RW	[7:0] pCurveList5[7:0]
0x00066d90	TMP_RW25		RW	reserved
0x00066d91	TMP_RW26	2'h01	RW	[7:2] reserved [1:0] pCurveList6[17:16]
0x00066d92	TMP_RW27	8'hc0	RW	[7:0] pCurveList6[15:8]
0x00066d93	TMP_RW28	8'h00	RW	[7:0] pCurveList6[7:0]
0x00066d94	TMP_RW29		RW	reserved
0x00066d95	TMP_RW30	2'h02	RW	[7:2] reserved [1:0] pCurveList7[17:16]
0x00066d96	TMP_RW31	8'h00	RW	[7:0] pCurveList7[15:8]
0x00066d97	TMP_RW32	8'h00	RW	[7:0] pCurveList7[7:0]
0x00066d98	TMP_RW33		RW	reserved
0x00066d99	TMP_RW34	2'h02	RW	[7:2] reserved [1:0] pCurveList8[17:16]
0x00066d9a	TMP_RW35	8'h40	RW	[7:0] pCurveList8[15:8]
0x00066d9b	TMP_RW36	8'h00	RW	[7:0] pCurveList8[7:0]
0x00066d9c	TMP_RW37		RW	reserved
0x00066d9d	TMP_RW38	2'h02	RW	[7:2] reserved [1:0] pCurveList9[17:16]
0x00066d9e	TMP_RW39	8'h80	RW	[7:0] pCurveList9[15:8]
0x00066d9f	TMP_RW40	8'h00	RW	[7:0] pCurveList9[7:0]

PRELIMINARY CONFIDENTIAL

Address	Register name	Default value	R/W	Descriptions
0x00066da0	TMP_RW41		RW	reserved
0x00066da1	TMP_RW42	2'h02	RW	[7:2] reserved [1:0] pCurveList10[17:16]
0x00066da2	TMP_RW43	8'hc0	RW	[7:0] pCurveList10[15:8]
0x00066da3	TMP_RW44	8'h00	RW	[7:0] pCurveList10[7:0]
0x00066da4	TMP_RW45		RW	reserved
0x00066da5	TMP_RW46	2'h03	RW	[7:2] reserved [1:0] pCurveList11[17:16]
0x00066da6	TMP_RW47	8'h00	RW	[7:0] pCurveList11[15:8]
0x00066da7	TMP_RW48	8'h00	RW	[7:0] pCurveList11[7:0]
0x00066da8	TMP_RW49		RW	reserved
0x00066da9	TMP_RW50	2'h03	RW	[7:2] reserved [1:0] pCurveList12[17:16]
0x00066daa	TMP_RW51	8'h40	RW	[7:0] pCurveList12[15:8]
0x00066dab	TMP_RW52	8'h00	RW	[7:0] pCurveList12[7:0]
0x00066dac	TMP_RW53		RW	reserved
0x00066dad	TMP_RW54	2'h03	RW	[7:2] reserved [1:0] pCurveList13[17:16]
0x00066dae	TMP_RW55	8'h80	RW	[7:0] pCurveList13[15:8]
0x00066daf	TMP_RW56	8'h00	RW	[7:0] pCurveList13[7:0]
0x00066db0	TMP_RW57		RW	reserved
0x00066db1	TMP_RW58	2'h03	RW	[7:2] reserved [1:0] pCurveList14[17:16]
0x00066db2	TMP_RW59	8'hc0	RW	[7:0] pCurveList14[15:8]
0x00066db3	TMP_RW60	8'h00	RW	[7:0] pCurveList14[7:0]
0x00066db4	TMP_RW61		RW	reserved
0x00066db5	TMP_RW62	2'h03	RW	[7:2] reserved [1:0] pCurveList15[17:16]
0x00066db6	TMP_RW63	8'hff	RW	[7:0] pCurveList15[15:8]

PRELIMINARY CONFIDENTIAL

Address	Register name	Default value	R/W	Descriptions
0x00066db7	TMP_RW64	8'hff	RW	[7:0] pCurveList15[7:0]
0x00066db8	TMP_RW65	2'h01	RW	[7;2] reserved [1:0] pCurveGainList0[9:8]
0x00066db9	TMP_RW66	8'h00	RW	[7:0] pCurveGainList0[7:0]
0x00066dba	TMP_RW67	2'h01	RW	[7;2] reserved [1:0] pCurveGainList1[9:8]
0x00066dbb	TMP_RW68	8'h00	RW	[7:0] pCurveGainList1[7:0]
0x00066dbc	TMP_RW69	2'h01	RW	[7;2] reserved [1:0] pCurveGainList2[9:8]
0x00066dbd	TMP_RW70	8'h00	RW	[7:0] pCurveGainList2[7:0]
0x00066dbe	TMP_RW71	2'h01	RW	[7;2] reserved [1:0] pCurveGainList3[9:8]
0x00066dbf	TMP_RW72	8'h00	RW	[7:0] pCurveGainList3[7:0]
0x00066dc0	TMP_RW73	2'h01	RW	[7;2] reserved [1:0] pCurveGainList4[9:8]
0x00066dc1	TMP_RW74	8'h00	RW	[7:0] pCurveGainList4[7:0]
0x00066dc2	TMP_RW75	2'h01	RW	[7;2] reserved [1:0] pCurveGainList5[9:8]
0x00066dc3	TMP_RW76	8'h00	RW	[7:0] pCurveGainList5[7:0]
0x00066dc4	TMP_RW77	2'h01	RW	[7;2] reserved [1:0] pCurveGainList6[9:8]
0x00066dc5	TMP_RW78	8'h00	RW	[7:0] pCurveGainList6[7:0]
0x00066dc6	TMP_RW79	2'h01	RW	[7;2] reserved [1:0] pCurveGainList7[9:8]
0x00066dc7	TMP_RW80	8'h00	RW	[7:0] pCurveGainList7[7:0]
0x00066dc8	TMP_RW81	2'h01	RW	[7;2] reserved [1:0] pCurveGainList8[9:8]
0x00066dc9	TMP_RW82	8'h00	RW	[7:0] pCurveGainList8[7:0]
0x00066dca	TMP_RW83	2'h01	RW	[7;2] reserved [1:0] pCurveGainList9[9:8]

PRELIMINARY CONFIDENTIAL

Address	Register name	Default value	R/W	Descriptions
0x00066dcb	TMP_RW84	8'h00	RW	[7:0] pCurveGainList9[7:0]
0x00066dcc	TMP_RW85	2'h01	RW	[7;2] reserved [1:0] pCurveGainList10[9:8]
0x00066dcd	TMP_RW86	8'h00	RW	[7:0] pCurveGainList10[7:0]
0x00066dce	TMP_RW87	2'h01	RW	[7;2] reserved [1:0] pCurveGainList11[9:8]
0x00066dcf	TMP_RW88	8'h00	RW	[7:0] pCurveGainList11[7:0]
0x00066dd0	TMP_RW89	8'h01	RW	[7;2] reserved [1:0] pCurveGainList12[9:8]
0x00066dd1	TMP_RW90	8'h00	RW	[7:0] pCurveGainList12[7:0]
0x00066dd2	TMP_RW91	2'h01	RW	[7;2] reserved [1:0] pCurveGainList13[9:8]
0x00066dd3	TMP_RW92	8'h00	RW	[7:0] pCurveGainList13[7:0]
0x00066dd4	TMP_RW93	2'h01	RW	[7;2] reserved [1:0] pCurveGainList14[9:8]
0x00066dd5	TMP_RW94	8'h00	RW	[7:0] pCurveGainList14[7:0]
0x00066dd6	TMP_RW95	2'h01	RW	[7;2] reserved [1:0] pCurveGainList15[9:8]
0x00066dd7	TMP_RW96	8'h00	RW	[7:0] pCurveGainList15[7:0]
0x00066dd8	TMP_RW97	8'h01	RW	[7:0] pCurveSegAList0[7:0]
0x00066dd9	TMP_RW98	8'h01	RW	[7:0] pCurveSegAList1[7:0]
0x00066dda	TMP_RW99	8'h01	RW	[7:0] pCurveSegAList2[7:0]
0x00066ddb	TMP_RW100	8'h01	RW	[7:0] pCurveSegAList3[7:0]
0x00066ddc	TMP_RW101	8'h01	RW	[7:0] pCurveSegAList4[7:0]
0x00066ddd	TMP_RW102	8'h01	RW	[7:0] pCurveSegAList5[7:0]
0x00066dde	TMP_RW103	8'h01	RW	[7:0] pCurveSegAList6[7:0]
0x00066ddf	TMP_RW104	8'h01	RW	[7:0] pCurveSegAList7[7:0]
0x00066de0	TMP_RW105	8'h01	RW	[7:0] pCurveSegAList8[7:0]
0x00066de1	TMP_RW106	8'h01	RW	[7:0] pCurveSegAList9[7:0]

PRELIMINARY CONFIDENTIAL

Address	Register name	Default value	R/W	Descriptions
0x00066de2	TMP_RW107	8'h01	RW	[7:0] pCurveSegAList10[7:0]
0x00066de3	TMP_RW108	8'h01	RW	[7:0] pCurveSegAList11[7:0]
0x00066de4	TMP_RW109	8'h01	RW	[7:0] pCurveSegAList12[7:0]
0x00066de5	TMP_RW110	8'h01	RW	[7:0] pCurveSegAList13[7:0]
0x00066de6	TMP_RW111	8'h01	RW	[7:0] pCurveSegAList14[7:0]
0x00066de7	TMP_RW112	8'h80	RW	[7:0] pCurveSegAList15[7:0]
0x00066de8	TMP_RW113	5'h0e	RW	[7:5] reserved [4:0] pCurveSegBList0[4:0]
0x00066de9	TMP_RW114	5'h0e	RW	[7:5] reserved [4:0] pCurveSegBList1[4:0]
0x00066dea	TMP_RW115	5'h0e	RW	[7:5] reserved [4:0] pCurveSegBList2[4:0]
0x00066deb	TMP_RW116	5'h0e	RW	[7:5] reserved [4:0] pCurveSegBList3[4:0]
0x00066dec	TMP_RW117	5'h0e	RW	[7:5] reserved [4:0] pCurveSegBList4[4:0]
0x00066ded	TMP_RW118	5'h0e	RW	[7:5] reserved [4:0] pCurveSegBList5[4:0]
0x00066dee	TMP_RW119	5'h0e	RW	[7:5] reserved [4:0] pCurveSegBList6[4:0]
0x00066def	TMP_RW120	5'h0e	RW	[7:5] reserved [4:0] pCurveSegBList7[4:0]
0x00066df0	TMP_RW121	5'h0e	RW	[7:5] reserved [4:0] pCurveSegBList8[4:0]
0x00066df1	TMP_RW122	5'h0e	RW	[7:5] reserved [4:0] pCurveSegBList9[4:0]
0x00066df2	TMP_RW123	5'h0e	RW	[7:5] reserved [4:0] pCurveSegBList10[4:0]
0x00066df3	TMP_RW124	5'h0e	RW	[7:5] reserved [4:0] pCurveSegBList11[4:0]
0x00066dff4	TMP_RW125	5'h0e	RW	[7:5] reserved

PRELIMINARY CONFIDENTIAL

Address	Register name	Default value	R/W	Descriptions
				[4:0] pCurveSegBList12[4:0]
0x00066df5	TMP_RW126	5'h0e	RW	[7:5] reserved [4:0] pCurveSegBList13[4:0]
0x00066df6	TMP_RW127	5'h0e	RW	[7:5] reserved [4:0] pCurveSegBList14[4:0]
0x00066df7	TMP_RW128	5'h15	RW	[7:5] reserved [4:0] pCurveSegBList15[4:0]

6.21 New SDE Register

Address	Register name	Default value	R/W	Descriptions
0x00065d00	SDENEW_00	8'h00	RW	[7:0] nYUVThre[0][0]
0x00065d01	SDENEW_01	8'hFF	RW	[7:0] nYUVThre[0][1]
0x00065d02	SDENEW_02	8'h01	RW	[7:1] Reserved [0] nYUVThre[1][0] (bit8)
0x00065d03	SDENEW_03	8'h80	RW	[7:0] nYUVThre[1][0] (bit7~bit0)
0x00065d04	SDENEW_04	8'h00	RW	[7:1] Reserved [0] nYUVThre[1][1] (bit8)
0x00065d05	SDENEW_05	8'h7F	RW	[7:0] nYUVThre[1][1] (bit7~bit0)
0x00065d06	SDENEW_06	8'h01	RW	[7:1] Reserved [0] nYUVThre[2][0] (bit8)
0x00065d07	SDENEW_07	8'h80	RW	[7:0] nYUVThre[2][0] (bit7~bit0)
0x00065d08	SDENEW_08	8'h00	RW	[7:1] Reserved [0] nYUVThre[2][1] (bit8)
0x00065d09	SDENEW_09	8'h7F	RW	[7:0] nYUVThre[2][1] (bit7~bit0)
0x00065d0a	SDENEW_0a	8'h00	RW	[7:6] Reserved [5] bColorSelectionEnable [4] bOREnable[1] [3] bOREnable[0] [2] bNotEnable[2] [1] bNotEnable[1]

PRELIMINARY CONFIDENTIAL

Address	Register name	Default value	R/W	Descriptions
				[0] bNotEnable[0]
0x00065d0c	SDENEW_0c	8'h00	RW	[7:2] Reserved [1:0] nYGain[9:8]
0x00065d0d	SDENEW_0d	8'h80	RW	[7:0] nYGain[7:0]
0x00065d0e	SDENEW_0e	8'h00	RW	[7:2] Reserved [1:0] nUVMatrix[0][0] (bit9~bit8)
0x00065d0f	SDENEW_0f	8'h40	RW	[7:0] nUVMztrix[0]0] (bit7~bit0)
0x00065d10	SDENEW_10	8'h00	RW	[7:2] Reserved [1:0] nUVMatrix[0][1] (bit9~bit8)
0x00065d11	SDENEW_11	8'h00	RW	[7:0] nUVMztrix[0][1] (bit7~bit0)
0x00065d12	SDENEW_12	8'h00	RW	[7:2] Reserved [1:0] nUVMatrix[1][0] (bit9~bit8)
0x00065d13	SDENEW_13	8'h00	RW	[7:0] nUVMztrix[1]0] (bit7~bit0)
0x00065d14	SDENEW_14	8'h00	RW	[7:2] Reserved [1:0] nUVMatrix[1][1] (bit9~bit8)
0x00065d15	SDENEW_15	8'h40	RW	[7:0] nUVMztrix[1][1] (bit7~bit0)
0x00065d16	SDENEW_16	8'h00	RW	[7:0] nYOffset
0x00065d17	SDENEW_17	8'h00	RW	[7:0] nUVOffset[0]
0x00065d18	SDENEW_18	8'h00	RW	[7:0] nUVOffset[1]
0x00065d19	SDENEW_19	8'h00	RW	[7:6] Reserved [5] nPEEnable [4] nNEEnable [3:0] nVectorizeShift
0x00065d1a	SDENEW_1a	8'h00	RW	[7:6] Reserved [5:0] nHthre
0x00065d1b	SDENEW_1b	8'h04	RW	[7:0] nHGain

PRELIMINARY CONFIDENTIAL

6.22 SDE Register

Address	Register name	Default value	R/W	Descriptions

Address	Register name	Default value	R/W	Descriptions
0x00065b00	r_sde_ctrl00	0x00	RW	[7] fixy_en [6] neg_en [5] gray_en [4] fix_v_en [3] fix_u_en [2] contrast_en [1] saturation_en [0] hue_en
0x00065b01	r_sde_ctrl01	0x80	RW	[7:0] hue_cos
0x00065b02	r_sde_ctrl02	0x00	RW	[7:0] hue_sin
0x00065b03	r_sde_ctrl03	0x40	RW	[7:0] sat_u or ureg
0x00065b04	r_sde_ctrl04	0x00	RW	[7:0] sat_v or vreg
0x00065b05	r_sde_ctrl05	0x00	RW	[7:0] yoffset
0x00065b06	r_sde_ctrl06	0x20	RW	[7:0] ygain
0x00065b07	r_sde_ctrl07	0x00	RW	[7:0] ybright
0x00065b08	r_sde_ctrl08	6'h00	RW	[7:6] reserved [5:0] signset
0x00065b09	r_sde_ctrl09	0x08	RW	[7:0] uvadj_th1
0x00065b0a	r_sde_ctrl0a	0x80	RW	[7:0] uvadj_th2
0x00065b0b	r_sde_ctrl0b	1'h00	RW	[7:1] reserved [0] uv_adj_man_en
0x00065b0c	r_sde_ctrl0c	0x00	RO	[7:0] uvadj_man

PRELIMINARY CONFIDENTIAL

6.23 YUV Crop Register (MCU Write)

Address	Register name	Default value	R/W	Descriptions
0x000650f0	Crop_00	8'h00	RW	[7:5] reserved [4:0] yuv_crop_left[12:8]
0x000650f1	Crop_01	8'h00	RW	[7:0] yuv_crop_left[7:0]
0x000650f2	Crop_02	8'h00	RW	[7:4] reserved [3:0] yuv_crop_top[11:8]

Address	Register name	Default value	R/W	Descriptions
0x000650f3	Crop_03	8'h00	RW	[7:0] yuv_crop_top[7:0]
0x000650f4	Crop_04	8'h14	RW	[7:5] reserved [4:0] yuv_crop_width[12:8]
0x000650f5	Crop_05	8'h30	RW	[7:0] yuv_crop_width[7:0]
0x000650f6	Crop_06	8'h0f	RW	[7:4] reserved [3:0] yuv_crop_height[11:8]
0x000650f7	Crop_07	8'h20	RW	[7:0] yuv_crop_height[7:0]
0x000650f8	Crop_08		RO	[7:5] reserved [4:0] pixel counter[12:8]
0x000650f9	Crop_09		RO	[7:0] pixel counter[7:0]
0x000650fa	Crop_10		RO	[7:4] reserved [3:0] line counter[11:8]
0x000650fb	Crop_11		RO	[7:0] line counter[7:0]

6.24 UV DNS Register

Address	Register name	Default value	R/W	Descriptions
0x00065c00	UVDNS_00	5'h01	RW	Long: [7:5] reserved [4:0] nNoiseList[0]
0x00065c01	UVDNS_01	5'h02	RW	Long: [7:5] reserved [4:0] nNoiseList[1]
0x00065c02	UVDNS_02	5'h04	RW	Long: [7:5] reserved [4:0] nNoiseList[2]
0x00065c03	UVDNS_03	5'h06	RW	Long: [7:5] reserved [4:0] nNoiseList[3]
0x00065c04	UVDNS_04	5'h0a	RW	Long: [7:5] reserved [4:0] nNoiseList[4]

PRELIMINARY CONFIDENTIAL

Address	Register name	Default value	R/W	Descriptions
0x00065c05	UVDNS_05	5'h12	RW	Long: [7:5] reserved [4:0] nNoiseList[5]
0x00065c06	UVDNS_06	8'h44	RW	Long: [7] nNoiseManEnable [6] nShadowExtraNoiseEnable [5] reserved [4:0] nShadowExtraNoise
0x00065c07	UVDNS_07	8'h0a	RW	Long: [7:5] reserved [4:0] nNoiseMan
0x00065c08	UVDNS_08	5'h01	RW	Short: [7:5] reserved [4:0] nNoiseList[0]
0x00065c09	UVDNS_09	5'h02	RW	Short: [7:5] reserved [4:0] nNoiseList[1]
0x00065c0a	UVDNS_0a	5'h04	RW	Short: [7:5] reserved [4:0] nNoiseList[2]
0x00065c0b	UVDNS_0b	5'h06	RW	Short: [7:5] reserved [4:0] nNoiseList[3]
0x00065c0c	UVDNS_0c	5'h0a	RW	Short: [7:5] reserved [4:0] nNoiseList[4]
0x00065c0d	UVDNS_0d	5'h12	RW	Short: [7:5] reserved [4:0] nNoiseList[5]
0x00065c0e	UVDNS_0e	8'h44	RW	Short: [7] nNoiseManEnable [6] nShadowExtraNoiseEnable [5] reserved [4:0] nShadowExtraNoise
0x00065c0f	UVDNS_0f	8'h0a	RW	Short:

PRELIMINARY CONFIDENTIAL

Address	Register name	Default value	R/W	Descriptions
				[7:5] reserved [4:0] nNoiseMan
0x00065c10	UVDNS_10		RO	Long: [7:5] reserved [4:0] Calculated noise for debug purpose
0x00065c11	UVDNS_11		RO	Short: [7:5] reserved [4:0] Calculated noise for debug purpose

6.25 YUV_HBIN Register

Address	Register name	Default value	R/W	Descriptions
0x00065f00	YUV_HBIN_00	5'h00	RW	[7:5] reserved [4] yuv_hbing_bypass 1for bypass [3:2] reserved [1] XbinningFlag Long [0] XbinningFlag Short
0x00065f01	YUV_HBIN_01	8'h05	RW	Long: [7:5] reserved [4:0] Filter[0][0]
0x00065f02	YUV_HBIN_02	8'h1b	RW	Long: [7:5] reserved [4:0] Filter[0][1]
0x00065f03	YUV_HBIN_03	8'h00	RW	Long: [7:5] reserved [4:0] Filter[0][2]
0x00065f04	YUV_HBIN_04	8'h00	RW	Long: [7:5] reserved [4:0] Filter[1][0]
0x00065f05	YUV_HBIN_05	8'h1b	RW	Long: [7:5] reserved [4:0] Filter[1][1]
0x00065f06	YUV_HBIN_06	8'h05	RW	Long:

PRELIMINARY CONFIDENTIAL

Address	Register name	Default value	R/W	Descriptions
				[7:5] reserved [4:0] Filter[1][2]
0x00065f07	YUV_HBIN_07	8'h05	RW	Short: [7:5] reserved [4:0] Filter[0][0]
0x00065f08	YUV_HBIN_08	8'h1b	RW	Short: [7:5] reserved [4:0] Filter[0][1]
0x00065f09	YUV_HBIN_09	8'h00	RW	Short: [7:5] reserved [4:0] Filter[0][2]
0x00065f0a	YUV_HBIN_0a	8'h00	RW	Short: [7:5] reserved [4:0] Filter[1][0]
0x00065f0b	YUV_HBIN_0b	8'h1b	RW	Short: [7:5] reserved [4:0] Filter[1][1]
0x00065f0c	YUV_HBIN_0c	8'h05	RW	Short: [7:5] reserved [4:0] Filter[1][2]

6.26 AFC Register

Address	Register name	Default value	R/W	Descriptions
0x00066100	afc_ctrl0	4'h0a	RW	[7:4] reserved [3] nLeftChannel: (1:Left; 0:Right) [2] bIfBinning: (1:binning; 0:non-binning) [1] nMode: (1:5x5;0:single) [0] bIfExtContrastThrMode (1:enable; 2:disable)
0x00066101	afc_ctrl1	8'h04	RW	[7:0] nContrastScale
0x00066102	afc_ctrl2	3'h00	RW	[7:3] reserved [2:0] nContrastThrExt[10:8]
0x00066103	afc_ctrl3	8'h50	RW	[7:0] nContrastThrExt[7:0]

PRELIMINARY CONFIDENTIAL

Address	Register name	Default value	R/W	Descriptions
0x00066104	afc_ctrl4	5'h01	RW	[7:5] reserved [4:0] nX0[12:8] The X coordinate of left top pixel of AF area
0x00066105	afc_ctrl5	8'h7d	RW	[7:0] nX0[7:0] The X coordinate of left top pixel of AF area
0x00066106	afc_ctrl6	4'h00	RW	[7:5] reserved [4:0] nY0[11:8] The Y coordinate of left top pixel of AF area
0x00066107	afc_ctrl7	8'he6	RW	[7:0] nY0[7:0] The Y coordinate of left top pixel of AF area
0x00066108	afc_ctrl8	3'h00	RW	[7:3] reserved [2:0] nW0[10:8] AF window width
0x00066109	afc_ctrl9	8'h60	RW	[7:0] nW0[7:0] AF window width
0x0006610a	afc_ctrl10	3'h00	RW	[7:3] reserved [2:0] nH0[10:8] AF window height (bit10~bit8)
0x0006610b	afc_ctrl11	8'h30	RW	[7:0] nH0[7:0] AF window height (bit7~bit0)
0x0006610c	afc_ctrl12	5'h01	RW	[7:5] reserved [4:0] nW1[12:8] 5x5 mode:(AF window width + horizontal border) x 4
0x0006610d	afc_ctrl13	8'hb8	RW	[7:0] nW1[7:0] 5x5 mode:(AF window width + horizontal border) x 4
0x0006610e	afc_ctrl14	4'h00	RW	[7:5] reserved [4:0] nH1[12:8] 5x5 mode: (AF window height + vertical border) x 4
0x0006610f	afc_ctrl15	8'hdc	RW	[7:0] nH1[7:0] 5x5 mode: (AF window height + vertical border) x 4
0x00066110	afc_ctrl16	5'h0c	RW	[7:5] reserved [4:0] nActiveWindowID The ID of selected window to return SAD value
0x00066111	afc_ctrl17	8'h08	RW	[7:0] Minimum statistic HF number

PRELIMINARY CONFIDENTIAL

Address	Register name	Default value	R/W	Descriptions
0x00066112	afc_ctrl18	8'h80	RW	[7:0] Statistic threshold

6.27 AFC Register (MCU Read)

Address	Register name	Default value	R/W	Descriptions
0x00066800	afc_ro_ctrl0		RO	[7:3] reserved [2:0] Normalized HF value for AF window0 (bit10~bit8)
0x00066801	afc_ro_ctrl1		RO	[7:0] Normalized HF value for AF window0 (bit7~bit0)
0x00066802	afc_ro_ctrl2		RO	[7:3] reserved [2:0] Normalized HF value for AF window1 (bit10~bit8)
0x00066803	afc_ro_ctrl3		RO	[7:0] Normalized HF value for AF window1 (bit7~bit0)
0x00066804	afc_ro_ctrl4		RO	[7:3] reserved [2:0] Normalized HF value for AF window2 (bit10~bit8)
0x00066805	afc_ro_ctrl5		RO	[7:0] Normalized HF value for AF window2 (bit7~bit0)
0x00066806	afc_ro_ctrl6		RO	[7:3] reserved [2:0] Normalized HF value for AF window3 (bit10~bit8)
0x00066807	afc_ro_ctrl7		RO	[7:0] Normalized HF value for AF window3 (bit7~bit0)
0x00066808	afc_ro_ctrl8		RO	[7:3] reserved [2:0] Normalized HF value for AF window4 (bit10~bit8)
0x00066809	afc_ro_ctrl9		RO	[7:0] Normalized HF value for AF window4 (bit7~bit0)
0x0006680a	afc_ro_ctrl10		RO	[7:3] reserved [2:0] Normalized HF value for AF window5 (bit10~bit8)
0x0006680b	afc_ro_ctrl11		RO	[7:0] Normalized HF value for AF window5 (bit7~bit0)
0x0006680c	afc_ro_ctrl12		RO	[7:3] reserved [2:0] Normalized HF value for AF window6 (bit10~bit8)
0x0006680d	afc_ro_ctrl13		RO	[7:0] Normalized HF value for AF window6 (bit7~bit0)
0x0006680e	afc_ro_ctrl14		RO	[7:3] reserved [2:0] Normalized HF value for AF window7 (bit10~bit8)
0x0006680f	afc_ro_ctrl15		RO	[7:0] Normalized HF value for AF window7 (bit7~bit0)
0x00066810	afc_ro_ctrl16		RO	[7:3] reserved

PRELIMINARY CONFIDENTIAL

Address	Register name	Default value	R/W	Descriptions
				[2:0] Normalized HF value for AF window8 (bit10~bit8)
0x00066811	afc_ro_ctrl17		RO	[7:0] Normalized HF value for AF window8 (bit7~bit0)
0x00066812	afc_ro_ctrl18		RO	[7:3] reserved [2:0] Normalized HF value for AF window9 (bit10~bit8)
0x00066813	afc_ro_ctrl19		RO	[7:0] Normalized HF value for AF window9 (bit7~bit0)
0x00066814	afc_ro_ctrl20		RO	[7:3] reserved [2:0] Normalized HF value for AF window10 (bit10~bit8)
0x00066815	afc_ro_ctrl21		RO	[7:0] Normalized HF value for AF window10(bit7~bit0)
0x00066816	afc_ro_ctrl22		RO	[7:3] reserved [2:0] Normalized HF value for AF window11 (bit10~bit8)
0x00066817	afc_ro_ctrl23		RO	[7:0] Normalized HF value for AF window11 (bit7~bit0)
0x00066818	afc_ro_ctrl24		RO	[7:3] reserved [2:0] Normalized HF value for AF window12 (bit10~bit8)
0x00066819	afc_ro_ctrl25		RO	[7:0] Normalized HF value for AF window12 (bit7~bit0)
0x0006681a	afc_ro_ctrl26		RO	[7:3] reserved [2:0] Normalized HF value for AF window13 (bit10~bit8)
0x0006681b	afc_ro_ctrl27		RO	[7:0] Normalized HF value for AF window13 (bit7~bit0)
0x0006681c	afc_ro_ctrl28		RO	[7:3] reserved [2:0] Normalized HF value for AF window14 (bit10~bit8)
0x0006681d	afc_ro_ctrl29		RO	[7:0] Normalized HF value for AF window14 (bit7~bit0)
0x0006681e	afc_ro_ctrl30		RO	[7:3] reserved [2:0] Normalized HF value for AF window15 (bit10~bit8)
0x0006681f	afc_ro_ctrl31		RO	[7:0] Normalized HF value for AF window15 (bit7~bit0)
0x00066820	afc_ro_ctrl32		RO	[7:3] reserved [2:0] Normalized HF value for AF window16 (bit10~bit8)
0x00066821	afc_ro_ctrl33		RO	[7:0] Normalized HF value for AF window16 (bit7~bit0)
0x00066822	afc_ro_ctrl34		RO	[7:3] reserved [2:0] Normalized HF value for AF window17 (bit10~bit8)
0x00066823	afc_ro_ctrl35		RO	[7:0] Normalized HF value for AF window17 (bit7~bit0)
0x00066824	afc_ro_ctrl36		RO	[7:3] reserved

PRELIMINARY CONFIDENTIAL

Address	Register name	Default value	R/W	Descriptions
				[2:0] Normalized HF value for AF window18 (bit10~bit8)
0x00066825	afc_ro_ctrl37		RO	[7:0] Normalized HF value for AF window18 (bit7~bit0)
0x00066826	afc_ro_ctrl38		RO	[7:3] reserved [2:0] Normalized HF value for AF window19 (bit10~bit8)
0x00066827	afc_ro_ctrl39		RO	[7:0] Normalized HF value for AF window19 (bit7~bit0)
0x00066828	afc_ro_ctrl40		RO	[7:3] reserved [2:0] Normalized HF value for AF window20 (bit10~bit8)
0x00066829	afc_ro_ctrl41		RO	[7:0] Normalized HF value for AF window20(bit7~bit0)
0x0006682a	afc_ro_ctrl42		RO	[7:3] reserved [2:0] Normalized HF value for AF window21 (bit10~bit8)
0x0006682b	afc_ro_ctrl43		RO	[7:0] Normalized HF value for AF window21 (bit7~bit0)
0x0006682c	afc_ro_ctrl44		RO	[7:3] reserved [2:0] Normalized HF value for AF window22 (bit10~bit8)
0x0006682d	afc_ro_ctrl45		RO	[7:0] Normalized HF value for AF window22 (bit7~bit0)
0x0006682e	afc_ro_ctrl46		RO	[7:3] reserved [2:0] Normalized HF value for AF window23 (bit10~bit8)
0x0006682f	afc_ro_ctrl47		RO	[7:0] Normalized HF value for AF window23 (bit7~bit0)
0x00066830	afc_ro_ctrl48		RO	[7:3] reserved [2:0] Normalized HF value for AF window24 (bit10~bit8)
0x00066831	afc_ro_ctrl49		RO	[7:0] Normalized HF value for AF window24 (bit7~bit0)
0x00066832	afc_ro_ctrl50		RO	[7:0] Normalized SAD horizontal list[0]
0x00066833	afc_ro_ctrl51		RO	[7:0] Normalized SAD horizontal list[1]
0x00066834	afc_ro_ctrl52		RO	[7:0] Normalized SAD horizontal list[2]
0x00066835	afc_ro_ctrl53		RO	[7:0] Normalized SAD horizontal list[3]
0x00066836	afc_ro_ctrl54		RO	[7:0] Normalized SAD horizontal list[4]
0x00066837	afc_ro_ctrl55		RO	[7:0] Normalized SAD horizontal list[5]
0x00066838	afc_ro_ctrl56		RO	[7:0] Normalized SAD horizontal list[6]
0x00066839	afc_ro_ctrl57		RO	[7:0] Normalized SAD horizontal list[7]
0x0006683a	afc_ro_ctrl58		RO	[7:0] Normalized SAD horizontal list[8]

PRELIMINARY CONFIDENTIAL

Address	Register name	Default value	R/W	Descriptions
0x0006683b	afc_ro_ctrl59		RO	[7:0] Normalized SAD horizontal list[9]
0x0006683c	afc_ro_ctrl60		RO	[7:0] Normalized SAD horizontal list[10]
0x0006683d	afc_ro_ctrl61		RO	[7:0] Normalized SAD horizontal list[11]
0x0006683e	afc_ro_ctrl62		RO	[7:0] Normalized SAD horizontal list[12]
0x0006683f	afc_ro_ctrl63		RO	[7:0] Normalized SAD horizontal list[13]
0x00066840	afc_ro_ctrl64		RO	[7:0] Normalized SAD horizontal list[14]
0x00066841	afc_ro_ctrl65		RO	[7:0] Normalized SAD horizontal list[15]
0x00066842	afc_ro_ctrl66		RO	[7:0] Normalized SAD horizontal list[16]
0x00066843	afc_ro_ctrl67		RO	[7:0] Normalized SAD horizontal list[17]
0x00066844	afc_ro_ctrl68		RO	[7:0] Normalized SAD horizontal list[18]
0x00066845	afc_ro_ctrl69		RO	[7:0] Normalized SAD horizontal list[19]
0x00066846	afc_ro_ctrl70		RO	[7:0] Normalized SAD horizontal list[20]
0x00066847	afc_ro_ctrl71		RO	[7:0] Normalized SAD horizontal list[21]
0x00066848	afc_ro_ctrl72		RO	[7:0] Normalized SAD horizontal list[22]
0x00066849	afc_ro_ctrl73		RO	[7:0] Normalized SAD horizontal list[23]
0x0006684a	afc_ro_ctrl74		RO	[7:0] Normalized SAD horizontal list[24]
0x0006684b	afc_ro_ctrl75		RO	[7:0] Normalized SAD horizontal list[25]
0x0006684c	afc_ro_ctrl76		RO	[7:0] Normalized SAD horizontal list[26]
0x0006684d	afc_ro_ctrl77		RO	[7:0] Normalized SAD horizontal list[27]
0x0006684e	afc_ro_ctrl78		RO	[7:0] Normalized SAD horizontal list[28]
0x0006684f	afc_ro_ctrl79		RO	[7:0] Normalized SAD horizontal list[29]
0x00066850	afc_ro_ctrl80		RO	[7:0] Normalized SAD horizontal list[30]
0x00066851	afc_ro_ctrl81		RO	[7:0] Normalized SAD horizontal list[31]
0x00066852	afc_ro_ctrl82		RO	[7:0] Normalized SAD horizontal list[32]
0x00066853	afc_ro_ctrl83		RO	[7:0] Normalized SAD horizontal list[33]
0x00066854	afc_ro_ctrl84		RO	[7:0] Normalized SAD horizontal list[34]
0x00066855	afc_ro_ctrl85		RO	[7:0] Normalized SAD horizontal list[35]

PRELIMINARY CONFIDENTIAL

Address	Register name	Default value	R/W	Descriptions
0x00066856	afc_ro_ctrl86		RO	[7:0] Normalized SAD horizontal list[36]
0x00066857	afc_ro_ctrl87		RO	[7:0] Normalized SAD horizontal list[37]
0x00066858	afc_ro_ctrl88		RO	[7:0] Normalized SAD horizontal list[38]
0x00066859	afc_ro_ctrl89		RO	[7:0] Normalized SAD horizontal list[39]
0x0006685a	afc_ro_ctrl90		RO	[7:0] Normalized SAD horizontal list[40]
0x0006685b	afc_ro_ctrl91		RO	[7:0] Normalized SAD horizontal list[41]
0x0006685c	afc_ro_ctrl92		RO	[7:0] Normalized SAD vertical list[0]
0x0006685d	afc_ro_ctrl93		RO	[7:0] Normalized SAD vertical list[1]
0x0006685e	afc_ro_ctrl94		RO	[7:0] Normalized SAD vertical list[2]
0x0006685f	afc_ro_ctrl95		RO	[7:0] Normalized SAD vertical list[3]
0x00066860	afc_ro_ctrl96		RO	[7:0] Normalized SAD vertical list[4]
0x00066861	afc_ro_ctrl97		RO	[7:0] Normalized SAD vertical list[5]
0x00066862	afc_ro_ctrl98		RO	[7:0] Normalized SAD vertical list[6]
0x00066863	afc_ro_ctrl99		RO	[7:0] Normalized SAD vertical list[7]
0x00066864	afc_ro_ctrl100		RO	[7:0] Normalized SAD vertical list[8]
0x00066865	afc_ro_ctrl101		RO	[7:0] Normalized SAD vertical list[9]
0x00066866	afc_ro_ctrl102		RO	[7:0] Normalized SAD vertical list[10]
0x00066867	afc_ro_ctrl103		RO	[7:0] Normalized SAD vertical list[11]
0x00066868	afc_ro_ctrl104		RO	[7:0] Normalized SAD vertical list[12]
0x00066869	afc_ro_ctrl105		RO	[7:0] Normalized SAD vertical list[13]
0x0006686a	afc_ro_ctrl106		RO	[7:0] Normalized SAD vertical list[14]
0x0006686b	afc_ro_ctrl107		RO	[7:0] Normalized SAD vertical list[15]
0x0006686c	afc_ro_ctrl108		RO	[7:0] Normalized SAD vertical list[16]
0x0006686d	afc_ro_ctrl109		RO	[7:0] Normalized SAD vertical list[17]
0x0006686e	afc_ro_ctrl110		RO	[7:0] Normalized SAD vertical list[18]
0x0006686f	afc_ro_ctrl111		RO	[7:0] Normalized SAD vertical list[19]
0x00066870	afc_ro_ctrl112		RO	[7:0] Normalized SAD vertical list[20]

PRELIMINARY CONFIDENTIAL

Address	Register name	Default value	R/W	Descriptions
0x00066871	afc_ro_ctrl113		RO	[7:0] Normalized SAD vertical list[21]
0x00066872	afc_ro_ctrl114		RO	[7:0] Normalized SAD vertical list[22]
0x00066873	afc_ro_ctrl115		RO	[7:0] Normalized SAD vertical list[23]
0x00066874	afc_ro_ctrl116		RO	[7:0] Normalized SAD vertical list[24]
0x00066875	afc_ro_ctrl117		RO	[7:0] Normalized SAD vertical list[25]
0x00066876	afc_ro_ctrl118		RO	[7:0] Normalized SAD vertical list[26]
0x00066877	afc_ro_ctrl119		RO	[7:0] Normalized SAD vertical list[27]
0x00066878	afc_ro_ctrl120		RO	[7:0] Normalized SAD vertical list[28]
0x00066879	afc_ro_ctrl121		RO	[7:0] Normalized SAD vertical list[29]
0x0006687a	afc_ro_ctrl122		RO	[7:0] Normalized SAD vertical list[30]
0x0006687b	afc_ro_ctrl123		RO	[7:0] Normalized SAD vertical list[31]
0x0006687c	afc_ro_ctrl124		RO	[7:0] Normalized SAD vertical list[32]
0x0006687d	afc_ro_ctrl125		RO	[7:0] Normalized SAD vertical list[33]
0x0006687e	afc_ro_ctrl126		RO	[7:0] Normalized SAD vertical list[34]
0x0006687f	afc_ro_ctrl127		RO	[7:0] Normalized SAD vertical list[35]
0x00066880	afc_ro_ctrl128		RO	[7:0] Normalized SAD vertical list[36]
0x00066881	afc_ro_ctrl129		RO	[7:0] Normalized SAD vertical list[37]
0x00066882	afc_ro_ctrl130		RO	[7:0] Normalized SAD vertical list[38]
0x00066883	afc_ro_ctrl131		RO	[7:0] Normalized SAD vertical list[39]
0x00066884	afc_ro_ctrl132		RO	[7:0] Normalized SAD vertical list[40]
0x00066885	afc_ro_ctrl133		RO	[7:0] Normalized SAD vertical list[41]
0x00066886	afc_ro_ctrl134		RO	[7:6] reserved [5:0] Length of SAD Vertical list
0x00066887	afc_ro_ctrl135		RO	[7:6] reserved [5:0] Length of SAD Horizontal list

PRELIMINARY CONFIDENTIAL

6.28 AWB CT Register

Address	Register name	Default value	R/W	Descriptions
0x00066200	awb_ctrl0	8'hff	RW	[7:0] awb_b_block_long
0x00066201	awb_ctrl1	8'h5b	RW	[7:4] reserved [3] slop_8x_long [2] slop_4x_long [1] reserved [0] average all enable 1: enable 0: disalbe
0x00066202	awb_ctrl2	8'h11	RW	reserved
0x00066203	awb_ctrl3	8'h10	RW	[7] slop_8x_short [6] slop_4x_short [5] awb_preset [4] awb_simf [3:2] awb window 0: whole image 1: crop 8 rows and 8 columns from 4 sides (top, bottom, left and right) of image 2: crop 1/8 in width&height from 4 sides of image 3: crop 1/4 in width&height from 4 sides of image [1:0] reserved
0x00066204	awb_ctrl4			reserved
0x00066205	awb_ctrl5			reserved
0x00066206	awb_ctrl6	8'h10	RW	[7:0] Long: awb_s_l
0x00066207	awb_ctrl7	8'h10	RW	[7:0] Long: awb_ec_l
0x00066208	awb_ctrl8	8'h10	RW	[7:0] Long: awb_fc_l
0x00066209	awb_ctrl9	8'h40	RW	[7:0] Long: awb_x0_l
0x0006620a	awb_ctrl10	8'h40	RW	[7:0] Long: awb_y0_l
0x0006620b	awb_ctrl11	8'h00	RW	[7:0] Long: awb_kx_l
0x0006620c	awb_ctrl12	8'h00	RW	[7:0] Long: awb_ky_l
0x0006620d	awb_ctrl13	8'h00	RW	[7:0] Long: day_limit_
0x0006620e	awb_ctrl14	8'h00	RW	[7:0] Long: a_limit_l

PRELIMINARY CONFIDENTIAL

Address	Register name	Default value	R/W	Descriptions
0x0006620f	awb_ctrl15	8'h20	RW	[7:0] Long: day_split_l
0x00066210	awb_ctrl16	8'h20	RW	[7:0] Long: a_split_l
0x00066211	awb_ctrl17	8'hff	RW	[7:0] Long: awb_top_limit_l
0x00066212	awb_ctrl18	8'h00	RW	[7:0] Long: awb_bot_limit_l
0x00066213	awb_ctrl19	8'hf0	RW	[7:0] long:red_limit_l
0x00066214	awb_ctrl20	8'hf0	RW	[7:0] long:green_limit_l
0x00066215	awb_ctrl21	8'hf0	RW	[7:0] long:blue_limit_l
0x00066216	awb_ctrl22	8'h03	RW	[7] awb_gain_m [6:4] reserved [3:2] awb_sim_sel [1] reserved [0] awb_bias_stat
0x00066217	awb_ctrl23	8'h02	RW	[7:0] local_limit
0x0006621e	awb_ctrl30	8'hff	RW	[7:0] Short: awb_b_block_s
0x0006621f	awb_ctrl31	8'h10	RW	[7:0] Short: awb_s_s
0x00066220	awb_ctrl32	8'h10	RW	[7:0] Short: awb_ec_s
0x00066221	awb_ctrl33	8'h10	RW	[7:0] Short: awb_fc_s
0x00066222	awb_ctrl34	8'h40	RW	[7:0] Short: awb_x0_s
0x00066223	awb_ctrl35	8'h40	RW	[7:0] Short: awb_y0_s
0x00066224	awb_ctrl36	8'h00	RW	[7:0] Short: awb_kx_s
0x00066225	awb_ctrl37	8'h00	RW	[7:0] Short: awb_ky_s
0x00066226	awb_ctrl38	8'h00	RW	[7:0] Short: day_limit_s
0x00066227	awb_ctrl39	8'h00	RW	[7:0] Short: a_limit_s
0x00066228	awb_ctrl3a	8'h20	RW	[7:0] Short: day_split_s
0x00066229	awb_ctrl3b	8'h20	RW	[7:0] Short: a_split_s
0x0006622a	awb_ctrl3c	8'hff	RW	[7:0] Short: awb_top_limit_s
0x0006622b	awb_ctrl3d	8'h00	RW	[7:0] Short: awb_bot_limit_s
0x0006622c	awb_ctrl3e	8'hf0	RW	[7:0] Short: red_limit_s

PRELIMINARY CONFIDENTIAL

Address	Register name	Default value	R/W	Descriptions
0x0006622d	awb_ctrl3f	8'hf0	RW	[7:0] Short: green_limit_s
0x0006622e	awb_ctrl40	8'hf0	RW	[7:0] Short: blue_limit_s
0x0006622f	DEBUG	8'h00	RW	[7]: bsum_l_fix [6]: gsum_l_fix [5]: rsum_l_fix [4]: bsum_s_fix [3]: gsum_s_fix [2]: rsum_s_fix [1]: allcnt_l_fix [0]: allcnt_s_fix
0x00066230	DEBUG	8'h00	RW	[7:6] reserved [5] fix_whole [4] fix_eof [3:0] fix_value

6.29 AWB CT Register (MCU)

Address	Register name	Default value	R/W	Descriptions
0x000668dc	awb_ro_r00		RO	[7:0] Long: b_sum_l[31:24]
0x000668dd	awb_ro_r01		RO	[7:0] Long: b_sum_l[23:16]
0x000668de	awb_ro_r02		RO	[7:0] Long: b_sum_l[15:8]
0x000668df	awb_ro_r03		RO	[7:0] Long: b_sum_l[7:0]
0x000668e0	awb_ro_r04		RO	[7:0] Long: g_sum_l[31:24]
0x000668e1	awb_ro_r05		RO	[7:0] Long: g_sum_l[23:16]
0x000668e2	awb_ro_r06		RO	[7:0] Long: g_sum_l[15:8]
0x000668e3	awb_ro_r07		RO	[7:0] Long: g_sum_l[7:0]
0x000668e4	awb_ro_r08		RO	[7:0] Long: r_sum_l[31:24]
0x000668e5	awb_ro_r09		RO	[7:0] Long: r_sum_l[23:16]
0x000668e6	awb_ro_r0a		RO	[7:0] Long: r_sum_l[15:8]
0x000668e7	awb_ro_r0b		RO	[7:0] Long: r_sum_l[7:0]

PRELIMINARY - CONFIDENTIAL

Address	Register name	Default value	R/W	Descriptions
0x000668e8	awb_ro_r0c		RO	[7:0] Short: b_sum_s[31:24]
0x000668e9	awb_ro_r0d		RO	[7:0] Short: b_sum_s[23:16]
0x000668ea	awb_ro_r0e		RO	[7:0] Short: b_sum_s[15:8]
0x000668eb	awb_ro_r0f		RO	[7:0] Short: b_sum_s[7:0]
0x000668ec	awb_ro_r10		RO	[7:0] Short: g_sum_s[31:24]
0x000668ed	awb_ro_r11		RO	[7:0] Short: g_sum_s[23:16]
0x000668ee	awb_ro_r12		RO	[7:0] Short: g_sum_s[15:8]
0x000668ef	awb_ro_r13		RO	[7:0] Short: g_sum_s[7:0]
0x000668f0	awb_ro_r14		RO	[7:0] Short: r_sum_s[31:24]
0x000668f1	awb_ro_r15		RO	[7:0] Short: r_sum_s[23:16]
0x000668f2	awb_ro_r16		RO	[7:0] Short: r_sum_s[15:8]
0x000668f3	awb_ro_r17		RO	[7:0] Short: r_sum_s[7:0]
0x000668f4	awb_ro_r18		RO	[7:0] reserved
0x000668f5	awb_ro_r19		RO	[7:6] reserved [5:0] Long: all_cnt_l[21:16]
0x000668f6	awb_ro_r1a		RO	[7:0] Long: all_cnt_l[15:8]
0x000668f7	awb_ro_r1b		RO	[7:0] Long: all_cnt_l[7:0]
0x000668f8	awb_ro_r1c		RO	[7:0] reserved
0x000668f9	awb_ro_r1d		RO	[7:6] reserved [5:0] Short: all_cnt_s[21:16]
0x000668fa	awb_ro_r1e		RO	[7:0] Short: all_cnt_s[15:8]
0x000668fb	awb_ro_r1f		RO	[7:0] Short: all_cnt_s[7:0]
0x000668fc	awb_ro_r20		RO	[7:0] Long: b_sum_a_l[31:24]
0x000668fd	awb_ro_r21		RO	[7:0] Long: b_sum_a_l[23:16]
0x000668fe	awb_ro_r22		RO	[7:0] Long: b_sum_a_l[15:8]
0x000668ff	awb_ro_r23		RO	[7:0] Long: b_sum_a_l[7:0]
0x00066900	awb_ro_r24		RO	[7:0] Long: g_sum_a_l[31:24]
0x00066901	awb_ro_r25		RO	[7:0] Long: g_sum_a_l[23:16]

PRELIMINARY CONFIDENTIAL

Address	Register name	Default value	R/W	Descriptions
0x00066902	awb_ro_r26		RO	[7:0] Long: g_sum_a_l[15:8]
0x00066903	awb_ro_r27		RO	[7:0] Long: g_sum_a_l[7:0]
0x00066904	awb_ro_r28		RO	[7:0] Long: r_sum_a_l[31:24]
0x00066905	awb_ro_r29		RO	[7:0] Long: r_sum_a_l[23:16]
0x00066906	awb_ro_r2a		RO	[7:0] Long: r_sum_a_l[15:8]
0x00066907	awb_ro_r2b		RO	[7:0] Long: r_sum_a_l[7:0]
0x00066908	awb_ro_r2c		RO	[7:0] Short: b_sum_a_s[31:24]
0x00066909	awb_ro_r2d		RO	[7:0] Short: b_sum_a_s[23:16]
0x0006690a	awb_ro_r2e		RO	[7:0] Short: b_sum_a_s[15:8]
0x0006690b	awb_ro_r2f		RO	[7:0] Short: b_sum_a_s[7:0]
0x0006690c	awb_ro_r30		RO	[7:0] Short: g_sum_a_s[31:24]
0x0006690d	awb_ro_r31		RO	[7:0] Short: g_sum_a_s[23:16]
0x0006690e	awb_ro_r32		RO	[7:0] Short: g_sum_a_s[15:8]
0x0006690f	awb_ro_r33		RO	[7:0] Short: g_sum_a_s[7:0]
0x00066910	awb_ro_r34		RO	[7:0] Short: r_sum_a_s[31:24]
0x00066911	awb_ro_r35		RO	[7:0] Short: r_sum_a_s[23:16]
0x00066912	awb_ro_r36		RO	[7:0] Short: r_sum_a_s[15:8]
0x00066913	awb_ro_r37		RO	[7:0] Short: r_sum_a_s[7:0]
0x00066914	awb_ro_r38		RO	[7:0] reserved
0x00066915	awb_ro_r39		RO	[7:6] reserved [5:0] Long: cnt_a_l[21:16]
0x00066916	awb_ro_r3a		RO	[7:0] Long: cnt_a_l[15:8]
0x00066917	awb_ro_r3b		RO	[7:0] Long: cnt_a_l[7:0]
0x00066918	awb_ro_r3c		RO	[7:0] reserved
0x00066919	awb_ro_r3d		RO	[7:6] reserved [5:0] Short: cnt_a_s[21:16]
0x0006691a	awb_ro_r3e		RO	[7:0] Short: cnt_a_s[15:8]
0x0006691b	awb_ro_r3f		RO	[7:0] Short: cnt_a_s[7:0]

PRELIMINARY CONFIDENTIAL

Address	Register name	Default value	R/W	Descriptions
0x0006691c	awb_ro_r40		RO	[7:0] Long: b_sum_day_l[31:24]
0x0006691d	awb_ro_r41		RO	[7:0] Long: b_sum_day_l[23:16]
0x0006691e	awb_ro_r42		RO	[7:0] Long: b_sum_day_l[15:8]
0x0006691f	awb_ro_r43		RO	[7:0] Long: b_sum_day_l[7:0]
0x00066920	awb_ro_r44		RO	[7:0] Long: g_sum_day_l[31:24]
0x00066921	awb_ro_r45		RO	[7:0] Long: g_sum_day_l[23:16]
0x00066922	awb_ro_r46		RO	[7:0] Long: g_sum_day_l[15:8]
0x00066923	awb_ro_r47		RO	[7:0] Long: g_sum_day_l[7:0]
0x00066924	awb_ro_r48		RO	[7:0] Long: r_sum_day_l[31:24]
0x00066925	awb_ro_r49		RO	[7:0] Long: r_sum_day_l[23:16]
0x00066926	awb_ro_r4a		RO	[7:0] Long: r_sum_day_l[15:8]
0x00066927	awb_ro_r4b		RO	[7:0] Long: r_sum_day_l[7:0]
0x00066928	awb_ro_r4c		RO	[7:0] Short: b_sum_day_s[31:24]
0x00066929	awb_ro_r4d		RO	[7:0] Short: b_sum_day_s[23:16]
0x0006692a	awb_ro_r4e		RO	[7:0] Short: b_sum_day_s[15:8]
0x0006692b	awb_ro_r4f		RO	[7:0] Short: b_sum_day_s[7:0]
0x0006692c	awb_ro_r50		RO	[7:0] Short: g_sum_day_s[31:24]
0x0006692d	awb_ro_r51		RO	[7:0] Short: g_sum_day_s[23:16]
0x0006692e	awb_ro_r52		RO	[7:0] Short: g_sum_day_s[15:8]
0x0006692f	awb_ro_r53		RO	[7:0] Short: g_sum_day_s[7:0]
0x00066930	awb_ro_r54		RO	[7:0] Short: r_sum_day_s[31:24]
0x00066931	awb_ro_r55		RO	[7:0] Short: r_sum_day_s[23:16]
0x00066932	awb_ro_r56		RO	[7:0] Short: r_sum_day_s[15:8]
0x00066933	awb_ro_r57		RO	[7:0] Short: r_sum_day_s[7:0]
0x00066934	awb_ro_r58		RO	[7:0] reserved
0x00066935	awb_ro_r59		RO	[7:6] reserved [5:0] Long: cnt_day_l[21:16]

PRELIMINARY CONFIDENTIAL

Address	Register name	Default value	R/W	Descriptions
0x00066936	awb_ro_r5a		RO	[7:0] Long: cnt_day_l[15:8]
0x00066937	awb_ro_r5b		RO	[7:0] Long: cnt_day_l[7:0]
0x00066938	awb_ro_r5c		RO	[7:0] reserved
0x00066939	awb_ro_r5d		RO	[7:6] reserved [5:0] Short: cnt_day_s[21:16]
0x0006693a	awb_ro_r5e		RO	[7:0] Short: cnt_day_s[15:8]
0x0006693b	awb_ro_r5f		RO	[7:0] Short: cnt_day_s[7:0]
0x0006693c	awb_ro_r60		RO	[7:0] Long: b_sum_cwf_l[31:24]
0x0006693d	awb_ro_r61		RO	[7:0] Long: b_sum_cwf_l[23:16]
0x0006693e	awb_ro_r62		RO	[7:0] Long: b_sum_cwf_l[15:8]
0x0006693f	awb_ro_r63		RO	[7:0] Long: b_sum_cwf_l[7:0]
0x00066940	awb_ro_r64		RO	[7:0] Long: g_sum_cwf_l[31:24]
0x00066941	awb_ro_r65		RO	[7:0] Long: g_sum_cwf_l[23:16]
0x00066942	awb_ro_r66		RO	[7:0] Long: g_sum_cwf_l[15:8]
0x00066943	awb_ro_r67		RO	[7:0] Long: g_sum_cwf_l[7:0]
0x00066944	awb_ro_r68		RO	[7:0] Long: r_sum_cwf_l[31:24]
0x00066945	awb_ro_r69		RO	[7:0] Long: r_sum_cwf_l[23:16]
0x00066946	awb_ro_r6a		RO	[7:0] Long: r_sum_cwf_l[15:8]
0x00066947	awb_ro_r6b		RO	[7:0] Long: r_sum_cwf_l[7:0]
0x00066948	awb_ro_r6c		RO	[7:0] Short: b_sum_cwf_s[31:24]
0x00066949	awb_ro_r6d		RO	[7:0] Short: b_sum_cwf_s[23:16]
0x0006694a	awb_ro_r6e		RO	[7:0] Short: b_sum_cwf_s[15:8]
0x0006694b	awb_ro_r6f		RO	[7:0] Short: b_sum_cwf_s[7:0]
0x0006694c	awb_ro_r70		RO	[7:0] Short: g_sum_cwf_s[31:24]
0x0006694d	awb_ro_r71		RO	[7:0] Short: g_sum_cwf_s[23:16]
0x0006694e	awb_ro_r72		RO	[7:0] Short: g_sum_cwf_s[15:8]
0x0006694f	awb_ro_r73		RO	[7:0] Short: g_sum_cwf_s[7:0]

PRELIMINARY CONFIDENTIAL

Address	Register name	Default value	R/W	Descriptions
0x00066950	awb_ro_r74		RO	[7:0] Short: r_sum_cwf_s[31:24]
0x00066951	awb_ro_r75		RO	[7:0] Short: r_sum_cwf_s[23:16]
0x00066952	awb_ro_r76		RO	[7:0] Short: r_sum_cwf_s[15:8]
0x00066953	awb_ro_r77		RO	[7:0] Short: r_sum_cwf_s[7:0]
0x00066954	awb_ro_r78		RO	[7:0] reserved
0x00066955	awb_ro_r79		RO	[7:6] reserved [5:0] Long: cnt_cwf_l[21:16]
0x00066956	awb_ro_r7a		RO	[7:0] Long: cnt_cwf_l[15:8]
0x00066957	awb_ro_r7b		RO	[7:0] Long: cnt_cwf_l[7:0]
0x00066958	awb_ro_r7c		RO	[7:0] reserved
0x00066959	awb_ro_r7d		RO	[7:6] reserved [5:0] Short: cnt_cwf_s[21:16]
0x0006695a	awb_ro_r7e		RO	[7:0] Short: cnt_cwf_s[15:8]
0x0006695b	awb_ro_r7f		RO	[7:0] Short: cnt_cwf_s[7:0]

6.30 AWB Simple Register

Address	Register name	Default value	R/W	Descriptions
0x00066700	awb_ctrl0	8'h00	RW	[7:2] reserved [1:0] midtone_ythre_low1[9:8]
0x00066701	awb_ctrl1	8'h10	RW	[7:0] midtone_ythre_low1[7:0]
0x00066702	awb_ctrl2	8'h01	RW	[7:2] reserved [1:0] midtone_ythre_low2[9:8]
0x00066703	awb_ctrl3	8'h00	RW	[7:0] midtone_ythre_low2[7:0]
0x00066704	awb_ctrl4	8'h03	RW	[7:2] reserved [1:0] midtone_ythre_high1[9:8]
0x00066705	awb_ctrl5	8'h68	RW	[7:0] midtone_ythre_high1[7:0]
0x00066706	awb_ctrl6	8'h00	RW	[7:2] reserved [1:0] midtone_ythre_high2[9:8]

PRELIMINARY CONFIDENTIAL

Address	Register name	Default value	R/W	Descriptions
0x00066707	awb_ctrl7	8'h80	RW	[7:0] midtone_ythre_high2[7:0]
0x00066708	awb_ctrl8	8'h00	RW	[7:2] reserved [1:0] gamma_ythre_low [9:8]
0x00066709	awb_ctrl9	8'h20	RW	[7:0] gamma_ythre_low [7:0]
0x0006670a	awb_ctrl10	8'h00	RW	[7:2] reserved [1:0] gamma_ythre_high [9:8]
0x0006670b	awb_ctrl11	8'h10	RW	[7:0] gamma_ythre_high [7:0]
0x0006670c	awb_ctrl12	8'h00	RW	[7:2] reserved [1:0] gamma_uvthre1 [9:8]
0x0006670d	awb_ctrl13	8'h40	RW	[7:0] gamma_uvthre1 [7:0]
0x0006670e	awb_ctrl14	8'h00	RW	[7:2] reserved [1:0] gamma_uvthre2 [9:8]
0x0006670f	awb_ctrl15	8'h40	RW	[7:0] gamma_uvthre2 [7:0]
0x00066710	awb_ctrl16	8'h00	RW	[7:2] reserved [1:0] shadow_ythre1 [9:8]
0x00066711	awb_ctrl17	8'h40	RW	[7:0] shadow_ythre1 [7:0]
0x00066712	awb_ctrl18	8'h00	RW	[7:2] reserved [1:0] shadow_ythre2 [9:8]
0x00066713	awb_ctrl19	8'h80	RW	[7:0] shadow_ythre2 [7:0]
0x00066714	awb_ctrl20	8'h00	RW	[7:2] reserved [1:0] shadow_uv_thre1 [9:8]
0x00066715	awb_ctrl21	8'h10	RW	[7:0] shadow_uv_thre1 [7:0]
0x00066716	awb_ctrl22	8'h00	RW	[7:2] reserved [1:0] shadow_uv_thre2 [9:8]
0x00066717	awb_ctrl23	8'h10	RW	[7:0] shadow_uv_thre2 [7:0]
0x00066718	awb_ctrl24	8'h3c	RW	[7:6] reserved [5:0] stat_sum_fix
0x00066719	awb_ctrl25	4'h01	RW	[7:4] reserved [3] custom_awb_en 1 – awb window enable 0 – awb window disable

PRELIMINARY CONFIDENTIAL

Address	Register name	Default value	R/W	Descriptions
				[2] precision_sel: precision of window width&hetght 1 – 32 0 – 16 [1:0] sub-sample mode 0/1: 2x sub-sample mode 2: 4x sub-sample mode 3: 8x sub-sample mode
0x0006671a	awb_ctrl26	8'h01	RW	[7:0] x_offset x-coordinate of start pixel of custom window
0x0006671b	awb_ctrl27	8'h01	RW	[7:0] y_offset y-coordinate of start pixel of custom window
0x0006671c	awb_ctrl28	8'h4a	RW	[7:0] window_width
0x0006671d	awb_ctrl29	8'h31	RW	[7:0] window_height

6.31 AWB Simple Register (MCU Read)

Address	Register name	Default value	R/W	Descriptions
0x0006688c	awb_stat_ro_r01		RO	[7:0] awb_long_linearsum_b[31:24]
0x0006688d	awb_stat_ro_r02		RO	[7:0] awb_long_linearsum_b[23:16]
0x0006688e	awb_stat_ro_r03		RO	[7:0] awb_long_linearsum_b[15:8]
0x0006688f	awb_stat_ro_r04		RO	[7:0] awb_long_linearsum_b[7:0]
0x00066890	awb_stat_ro_r06		RO	[7:0] awb_long_linearsum_g[31:24]
0x00066891	awb_stat_ro_r07		RO	[7:0] awb_long_linearsum_g[23:16]
0x00066892	awb_stat_ro_r08		RO	[7:0] awb_long_linearsum_g[15:8]
0x00066893	awb_stat_ro_r09		RO	[7:0] awb_long_linearsum_g[7:0]
0x00066894	awb_stat_ro_r11		RO	[7:0] awb_long_linearsum_r[31:24]
0x00066895	awb_stat_ro_r12		RO	[7:0] awb_long_linearsum_r[23:16]
0x00066896	awb_stat_ro_r13		RO	[7:0] awb_long_linearsum_r[15:8]
0x00066897	awb_stat_ro_r14		RO	[7:0] awb_long_linearsum_r[7:0]
0x00066898				reserved

PRELIMINARY CONFIDENTIAL

Address	Register name	Default value	R/W	Descriptions
0x00066899	awb_stat_ro_r16		RO	[7] reserved [6:0] awb_long_linearsum_w[22:16]
0x0006689a	awb_stat_ro_r17		RO	[7:0] awb_long_linearsum_w[15:8]
0x0006689b	awb_stat_ro_r18		RO	[7:0] awb_long_linearsum_w[7:0]
0x0006689c	awb_stat_ro_r20		RO	[7:0] awb_short_linearsum_b[31:24]
0x0006689d	awb_stat_ro_r21		RO	[7:0] awb_short_linearsum_b[23:16]
0x0006689e	awb_stat_ro_r22		RO	[7:0] awb_short_linearsum_b[15:8]
0x0006689f	awb_stat_ro_r23		RO	[7:0] awb_short_linearsum_b[7:0]
0x000668a0	awb_stat_ro_r25		RO	[7:0] awb_short_linearsum_g[31:24]
0x000668a1	awb_stat_ro_r26		RO	[7:0] awb_short_linearsum_g[23:16]
0x000668a2	awb_stat_ro_r27		RO	[7:0] awb_short_linearsum_g[15:8]
0x000668a3	awb_stat_ro_r28		RO	[7:0] awb_short_linearsum_g[7:0]
0x000668a4	awb_stat_ro_r30		RO	[7:0] awb_short_linearsum_r[31:24]
0x000668a5	awb_stat_ro_r31		RO	[7:0] awb_short_linearsum_r[23:16]
0x000668a6	awb_stat_ro_r32		RO	[7:0] awb_short_linearsum_r[15:8]
0x000668a7	awb_stat_ro_r33		RO	[7:0] awb_short_linearsum_r[7:0]
0x000668a8				reserved
0x000668a9	awb_stat_ro_r35		RO	[7] reserved [6:0] awb_short_linearsum_w[22:16]
0x000668aa	awb_stat_ro_r36		RO	[7:0] awb_short_linearsum_w[15:8]
0x000668ab	awb_stat_ro_r37		RO	[7:0] awb_short_linearsum_w[7:0]
0x000668ac	awb_stat_ro_r53		RO	[7:0] awb_long_shadowsum_b[31:24]
0x000668ad	awb_stat_ro_r54		RO	[7:0] awb_long_shadowsum_b[23:16]
0x000668ae	awb_stat_ro_r55		RO	[7:0] awb_long_shadowsum_b[15:8]
0x000668af	awb_stat_ro_r56		RO	[7:0] awb_long_shadowsum_b[7:0]
0x000668b0	awb_stat_ro_r58		RO	[7:0] awb_long_shadowsum_g[31:24]
0x000668b1	awb_stat_ro_r59		RO	[7:0] awb_long_shadowsum_g[23:16]
0x000668b2	awb_stat_ro_r60		RO	[7:0] awb_long_shadowsum_g[15:8]

PRELIMINARY CONFIDENTIAL

Address	Register name	Default value	R/W	Descriptions
0x000668b3	awb_stat_ro_r61		RO	[7:0] awb_long_shadowsum_g[7:0]
0x000668b4	awb_stat_ro_r63		RO	[7:0] awb_long_shadowsum_r[31:24]
0x000668b5	awb_stat_ro_r64		RO	[7:0] awb_long_shadowsum_r[23:16]
0x000668b6	awb_stat_ro_r65		RO	[7:0] awb_long_shadowsum_r[15:8]
0x000668b7	awb_stat_ro_r66		RO	[7:0] awb_long_shadowsum_r[7:0]
0x000668b8				reserved
0x000668b9	awb_stat_ro_r68		RO	[7] reserved [6:0] awb_long_shadowsum_w[22:16]
0x000668ba	awb_stat_ro_r69		RO	[7:0] awb_long_shadowsum_w[15:8]
0x000668bb	awb_stat_ro_r70		RO	[7:0] awb_long_shadowsum_w[7:0]
0x000668bc	awb_stat_ro_r72		RO	[7:0] awb_short_shadowsum_b[31:24]
0x000668bd	awb_stat_ro_r73		RO	[7:0] awb_short_shadowsum_b[23:16]
0x000668be	awb_stat_ro_r74		RO	[7:0] awb_short_shadowsum_b[15:8]
0x000668bf	awb_stat_ro_r75		RO	[7:0] awb_short_shadowsum_b[7:0]
0x000668c0	awb_stat_ro_r77		RO	[7:0] awb_short_shadowsum_g[31:24]
0x000668c1	awb_stat_ro_r78		RO	[7:0] awb_short_shadowsum_g[23:16]
0x000668c2	awb_stat_ro_r79		RO	[7:0] awb_short_shadowsum_g[15:8]
0x000668c3	awb_stat_ro_r80		RO	[7:0] awb_short_shadowsum_g[7:0]
0x000668c4	awb_stat_ro_r82		RO	[7:0] awb_short_shadowsum_r[31:24]
0x000668c5	awb_stat_ro_r83		RO	[7:0] awb_short_shadowsum_r[23:16]
0x000668c6	awb_stat_ro_r84		RO	[7:0] awb_short_shadowsum_r[15:8]
0x000668c7	awb_stat_ro_r85		RO	[7:0] awb_short_shadowsum_r[7:0]
0x000668c8				reserved
0x000668c9	awb_stat_ro_r87		RO	[7] reserved [6:0] awb_short_shadowsum_w[22:16]
0x000668ca	awb_stat_ro_r88		RO	[7:0] awb_short_shadowsum_w[15:8]
0x000668cb	awb_stat_ro_r89		RO	[7:0] awb_short_shadowsum_w[7:0]
0x000668cc	awb_stat_ro_r39		RO	[7] reserved

PRELIMINARY CONFIDENTIAL

Address	Register name	Default value	R/W	Descriptions
				[6:0] awb_gamma_sum_u[30:24]
0x000668cd	awb_stat_ro_r40		RO	[7:0] awb_gamma_sum_u[23:16]
0x000668ce	awb_stat_ro_r41		RO	[7:0] awb_gamma_sum_u[15:8]
0x000668cf	awb_stat_ro_r42		RO	[7:0] awb_gamma_sum_u[7:0]
0x000668d0	awb_stat_ro_r44		RO	[7] reserved [6:0] awb_gamma_sum_v[30:24]
0x000668d1	awb_stat_ro_r45		RO	[7:0] awb_gamma_sum_v[23:16]
0x000668d2	awb_stat_ro_r46		RO	[7:0] awb_gamma_sum_v[15:8]
0x000668d3	awb_stat_ro_r47		RO	[7:0] awb_gamma_sum_v[7:0]
0x000668d4				reserved
0x000668d5	awb_stat_ro_r49		RO	[7] reserved [6:0] awb_gamma_sum_w[22:16]
0x000668d6	awb_stat_ro_r50		RO	[7:0] awb_gamma_sum_w[15:8]
0x000668d7	awb_stat_ro_r51		RO	[7:0] awb_gamma_sum_w[7:0]

6.32 AEC Register

Address	Register name	Default value	R/W	Descriptions
0x00066400	AEC_00	2'h01	RW	[7:2] reserved [1:0] m_nStatisticSampling
0x00066401	AEC_01	5'h00	RW	[7:5] reserved [4:0] StatWin_Left[12:8]
0x00066402	AEC_02	8'h00	RW	[7:0] StatWin_Left[7:0]
0x00066403	AEC_03	4'h00	RW	[7:4] reserved [3:0] StatWin_Top[11:8]
0x00066404	AEC_04	8'h04	RW	[7:0] StatWin_Top[7:0]
0x00066405	AEC_05	5'h00	RW	[7:5] reserved [4:0] StatWin_Right[12:8]
0x00066406	AEC_06	8'h00	RW	[7:0] StatWin_Right[7:0]

PRELIMINARY CONFIDENTIAL

Address	Register name	Default value	R/W	Descriptions
0x00066407	AEC_07	4'h00	RW	[7:4] reserved [3:0] StatWin_Bottom[11:8]
0x00066408	AEC_08	8'h08	RW	[7:0] StatWin_Bottom[7:0]
0x00066409	AEC_09	5'h00	RW	[7:5] reserved [4:0] Long: WinLeft_l[12:8]
0x0006640a	AEC_0a	8'h64	RW	[7:0] Long: WinLeft_l[7:0]
0x0006640b	AEC_0b	5'h00	RW	[7:5] reserved [4:0] Short: WinLeft_s[11:8]
0x0006640c	AEC_0c	8'h64	RW	[7:0] Short: WinLeft_s[7:0]
0x0006640d	AEC_0d	4'h00	RW	[7:4] reserved [3:0] Long: Wintop_l[11:8]
0x0006640e	AEC_0e	8'h4b	RW	[7:0] Long: Wintop_l[7:0]
0x0006640f	AEC_0f	4'h00	RW	[7:4] reserved [3:0] Short: Wintop_s[11:8]
0x00066410	AEC_10	8'h4b	RW	[7:0] Short: Wintop_s[7:0]
0x00066411	AEC_11	5'h00	RW	[7:5] reserved [4:0] Long: Winwidth_l[12:8]
0x00066412	AEC_12	8'hc8	RW	[7:0] Long: Winwidth_l[7:0]
0x00066413	AEC_13	5'h00	RW	[7:5] reserved [4:0] Short: Winwidth_s[12:8]
0x00066414	AEC_14	8'hc8	RW	[7:0] Short: Winwidth_s[7:0]
0x00066415	AEC_15	4'h00	RW	[7:4] reserved [3:0] Long: Winheight_l[11:8]
0x00066416	AEC_16	8'h96	RW	[7:0] Long: Winheight_l[7:0]
0x00066417	AEC_17	4'h00	RW	[7:4] reserved [3:0] Short: Winheight_s[11:8]
0x00066418	AEC_18	8'h96	RW	[7:0] Short: Winheight_s[7:0]
0x00066419	AEC_19	5'h00	RW	[7:5] reserved [4:0] Long: ROI_Left_l[12:8]
0x0006641a	AEC_1a	8'h00	RW	[7:0] Long: ROI_Left_l[7:0]

PRELIMINARY CONFIDENTIAL

Address	Register name	Default value	R/W	Descriptions
0x0006641b	AEC_1b	5'h00	RW	[7:5] reserved [4:0] Short: ROI_Left_s[12:8]
0x0006641c	AEC_1c	8'h00	RW	[7:0] Short: ROI_Left_s[7:0]
0x0006641d	AEC_1d	4'h00	RW	[7:4] reserved [3:0] Long: ROI_top_l[11:8]
0x0006641e	AEC_1e	8'h00	RW	[7:0] Long: ROI_top_l[7:0]
0x0006641f	AEC_1f	4'h00	RW	[7:4] reserved [3:0] Short: ROI_top_s[11:8]
0x00066420	AEC_20	8'h00	RW	[7:0] Short: ROI_top_s[7:0]
0x00066421	AEC_21	5'h00	RW	[7:5] reserved [4:0] Long: ROI_right_l[12:8]
0x00066422	AEC_22	8'h00	RW	[7:0] Long: ROI_right_l[7:0]
0x00066423	AEC_23	5'h00	RW	[7:5] reserved [4:0] Short: ROI_right_s[12:8]
0x00066424	AEC_24	8'h00	RW	[7:0] Short: ROI_right_s[7:0]
0x00066425	AEC_25	4'h00	RW	[7:4] reserved [3:0] Long: ROI_bottom_l[11:8]
0x00066426	AEC_26	8'h00	RW	[7:0] Long: ROI_bottom_l[7:0]
0x00066427	AEC_27	4'h00	RW	[7:4] reserved [3:0] Short: ROI_bottom_s[11:8]
0x00066428	AEC_28	8'h00	RW	[7:0] Short: ROI_bottom_s[7:0]
0x00066429	AEC_29	6'h00	RW	[7:6] reserved [5:3] Long: ROI_shift_l [2:0] Short: ROI_shift_s
0x0006642a	AEC_2a	5'h01	RW	[7:0] Long: ROI_weight_l0
0x0006642b	AEC_2b	5'h01	RW	[7:0] Long: ROI_weight_l1
0x0006642c	AEC_2c	5'h01	RW	[7:0] Short: ROI_weight_s0
0x0006642d	AEC_2d	5'h01	RW	[7:0] Short: ROI_weight_s1
0x0006642e	AEC_2e	5'h01	RW	[7:0] Long: Weight_L0
0x0006642f	AEC_2f	5'h01	RW	[7:0] Long: Weight_L1

PRELIMINARY CONFIDENTIAL

Address	Register name	Default value	R/W	Descriptions
0x00066430	AEC_30	5'h01	RW	[7:0] Long: Weight_L2
0x00066431	AEC_31	5'h01	RW	[7:0] Long: Weight_L3
0x00066432	AEC_32	5'h01	RW	[7:0] Long: Weight_L4
0x00066433	AEC_33	5'h01	RW	[7:0] Long: Weight_L5
0x00066434	AEC_34	5'h01	RW	[7:0] Long: Weight_L6
0x00066435	AEC_35	5'h01	RW	[7:0] Long: Weight_L7
0x00066436	AEC_36	5'h01	RW	[7:0] Long: Weight_L8
0x00066437	AEC_37	5'h01	RW	[7:0] Long: Weight_L9
0x00066438	AEC_38	5'h01	RW	[7:0] Long: Weight_La
0x00066439	AEC_39	5'h01	RW	[7:0] Long: Weight_Lb
0x0006643a	AEC_3a	5'h01	RW	[7:0] Long: Weight_Lc
0x0006643b	AEC_3b	5'h01	RW	[7:0] Short: Weight_S0
0x0006643c	AEC_3c	5'h01	RW	[7:0] Short: Weight_S1
0x0006643d	AEC_3d	5'h01	RW	[7:0] Short: Weight_S2
0x0006643e	AEC_3e	5'h01	RW	[7:0] Short: Weight_S3
0x0006643f	AEC_3f	5'h01	RW	[7:0] Short: Weight_S4
0x00066440	AEC_40	5'h01	RW	[7:0] Short: Weight_S5
0x00066441	AEC_41	5'h01	RW	[7:0] Short: Weight_S6
0x00066442	AEC_42	5'h01	RW	[7:0] Short: Weight_S7
0x00066443	AEC_43	5'h01	RW	[7:0] Short: Weight_S8
0x00066444	AEC_44	5'h01	RW	[7:0] Short: Weight_S9
0x00066445	AEC_45	5'h01	RW	[7:0] Short: Weight_Sa
0x00066446	AEC_46	5'h01	RW	[7:0] Short: Weight_Sb
0x00066447	AEC_47	5'h01	RW	[7:0] Short: Weight_Sc
0x00066448	AEC_48	5'h01	RW	[7:0] Long: MinW_l
0x00066449	AEC_49	5'h01	RW	[7:0] Short: MinW_s
0x0006644a	AEC_4a	2'h00	RW	[7:2] reserved

PRELIMINARY CONFIDENTIAL

Address	Register name	Default value	R/W	Descriptions
				[1:0] Long: MaxW_l[9:8]
0x0006644b	AEC_4b	8'd20	RW	[7:0] Long: MaxW_l[7:0]
0x0006644c	AEC_4c	2'h01	RW	[7:2] reserved [1:0] Short: MaxW_s[9:8]
0x0006644d	AEC_4d	8'h00	RW	[7:0] Short: MaxW_s[7:0]
0x0006644e	AEC_4e	3'h00	RW	[7:0] PosWshift
0x0006644f	AEC_4f	8'h04	RW	[7:0] LowLightThre
0x00066450	AEC_50	8'hf0	RW	[7:0] HighLightThre
0x00066451				reserved
0x00066452	AEC_52	8'h01	RW	[7] reserved [6:0] FinalSaturatePer[6:0]
0x00066453				reserved
0x00066454	AEC_54	7'h04	RW	[7] reserved [6:0] Long: BlackPer1_l[6:0]
0x00066455				reserved
0x00066456	AEC_56	7'h10	RW	[7] reserved [6:0] Short: BlackPer1_s[6:0]
0x00066457				reserved
0x00066458	AEC_58	7'h20	RW	[7] reserved [6:0] Long: BlackPer2_l[6:0]
0x00066459				reserved
0x0006645a	AEC_5a	7'h40	RW	[7] reserved [6:0] Short: BlackPer2_s[6:0]
0x0006645b	AEC_5b	8'h10	RW	[7] reserved [6:0] Long: BlackWeight1_l[6:0]
0x0006645c	AEC_5c	7'h08	RW	[7] reserved [6:0] Short: BlackWeight1_s[6:0]
0x0006645d	AEC_5d	7'h14	RW	[7] reserved [6:0] Long: BlackWeight2_l[6:0]
0x0006645e	AEC_5e	7'h12	RW	[7] reserved

PRELIMINARY CONFIDENTIAL

Address	Register name	Default value	R/W	Descriptions
				[6:0] Short: BlackWeight2_s[6:0]
0x0006645f				reserved
0x00066460	AEC_60	7'h08	RW	[7] reserved [6:0] Long: SaturatePer1_l[6:0]
0x00066461				reserved
0x00066462	AEC_62	7'h04	RW	[7] reserved [6:0] Short: SaturatePer1_s[6:0]
0x00066463				reserved
0x00066464	AEC_64	7'h10	RW	[7] reserved [6:0] Long: SaturatePer2_l[6:0]
0x00066465				reserved
0x00066466	AEC_66	7'h20	RW	[7] reserved [6:0] Short: SaturatePer2_s[6:0]
0x00066467	AEC_67	7'h10	RW	[7] reserved [6:0] Long: SaturateWeight1_l[6:0]
0x00066468	AEC_68	7'h12	RW	[7] reserved [6:0] Short: SaturateWeight1_s[6:0]
0x00066469	AEC_69	7'h12	RW	[7] reserved [6:0] Long: SaturateWeight2_l[6:0]
0x0006646a	AEC_6a	7'h14	RW	[7] reserved [6:0] Short: SaturateWeight2_s[6:0]
0x0006646b	AEC_6b	8'h00	RW	Used for debug: [7] fix_whole [6] fix_eof [5:4] fix_select 01 mean Y of long, 10 mean Y of short, 11 idat [3:0] fix_value
0x0006646c	AEC_6c	8'h00	RW	[7:1] reserved [0] r_his_en
0x0006646d	AEC_6d	8'h00	RW	[7:0] r_his_addr

PRELIMINARY CONFIDENTIAL

Address	Register name	Default value	R/W	Descriptions
0x0006646e	AEC_6e		RO	[7:4] reserved [3:0] r_his_data[19:16]
0x0006646f	AEC_6f		RO	[7:0] r_his_data[15:8]
0x00066470	AEC_70		RO	[7:0] r_his_data[7:0]
0x00066471~ 0x0006647f				reserved

6.33 AEC Register (MCU Read)

Address	Register name	Default value	R/W	Descriptions
0x00066a64	AEC_R01	NA	RO	[7:0] Mean Y of long exposure
0x00066a65	AEC_R02	NA	RO	[7:0] Mean Y of short exposure
0x00066a66	AEC_R03	NA	RO	[7:0] nlLatch
0x00066a67	AEC_R04	NA	RO	[7:0] High Level

6.34 AEC Register (MCU Write)

Address	Register name	Default value	R/W	Descriptions
0x00066c00	AEC_W01	8'h00	RO	[7:2] reserved [1:0] Long: Real Gain[9:8]
0x00066c01	AEC_W02	8'h10	RO	[7:0] Long: Real Gain[7:0]
0x00066c02	AEC_W03	8'h00	RO	[7:2] reserved [1:0] Short: Real Gain[9:8]
0x00066c03	AEC_W04	8'h10	RO	[7:0] Short: Real Gain[7:0]

6.35 High Level Register

Address	Register name	Default value	R/W	Descriptions

PRELIMINARY CONFIDENTIAL

Address	Register name	Default value	R/W	Descriptions
0x00066300	high_00	8'hf0	RW	[7:0] m_nMinHighLevel
0x00066301	high_01	3'h02	RW	[7:3] reserved [2:0] m_nHighLevelStep
0x00066302	high_02	8'hfd	RW	[7:0] m_nRefBin
0x00066303	high_03	6'h01	RW	[7:6] reserved [5:0] m_nPsPer[0]
0x00066304	high_04	6'h04	RW	[7:6] reserved [5:0] m_nPsPer[1]

6.36 Low Level Register

Address	Register name	Default value	R/W	Descriptions
0x00066500	lowlevel_00	6'h30	RW	[7:6] reseved [5] m_nOption 1 select min one of R/G/B 0 select max one of R/G/B [4:0] m_nStep
0x00066501	lowlevel_01	2'h02	RW	[7:2] reserved [1:0] m_nMaxLowLevel (bit9~bit8)
0x00066502	lowlevel_02	8'h00	RW	[7:0] m_nMaxLowLevel (bit7~bit0)
0x00066503	lowlevel_03	6'h01	RW	[7:6] reserved [5:0] m_nPsPer
0x00066504	lowlevel_04	8'h00	RO	[7:1] 7'h0 [0] low_pre_sum byte3 (bit25)
0x00066505	lowlevel_05	8'h00	RO	[7:0] low_pre_sum byte2 (bit23~bit16)
0x00066506	lowlevel_06	8'h00	RO	[7:0] low_pre_sum byte1 (bit15~bit8)
0x00066507	lowlevel_07	8'h00	RO	[7:0] low_pre_sum byte0 (bit7~bit0)
0x00066508	lowlevel_08	8'h00	RO	[7:1] 7'h0 [0] ow_next_sum byte3 (bit25)
0x00066509	lowlevel_09	8'h00	RO	[7:0] low_next_sum byte2 (bit23~bit16)
0x0006650a	lowlevel_0a	8'h00	RO	[7:0] low_next_sum byte1 (bit15~bit8)

PRELIMINARY CONFIDENTIAL

Address	Register name	Default value	R/W	Descriptions
0x0006650b	lowlevel_0b	8'h00	RO	[7:0] low_next_sum byte0 (bit7~bit0)

6.37 GPIO Register

Address	Register name	Default value	R/W	Descriptions
0x00063d00	r_seq_ctrl00	8'h00	RW	[7:0] r_reg1[31:24]
0x00063d01	r_seq_ctrl01	8'h00	RW	[7:0] r_reg1[23:16]
0x00063d02	r_seq_ctrl02	8'h00	RW	[7:0] r_reg1[15:8]
0x00063d03	r_seq_ctrl03	8'h00	RW	[7:0] r_reg1[7:0]
0x00063d04	r_seq_ctrl04	8'h00	RW	[7:0] r_reg2[31:24]
0x00063d05	r_seq_ctrl05	8'h00	RW	[7:0] r_reg2[23:16]
0x00063d06	r_seq_ctrl06	8'h00	RW	[7:0] r_reg2[15:8]
0x00063d07	r_seq_ctrl07	8'h00	RW	[7:0] r_reg2[7:0]
0x00063d08	r_seq_ctrl08	8'h00	RW	[7:0] r_reg3[31:24]
0x00063d09	r_seq_ctrl09	8'h00	RW	[7:0] r_reg3[23:16]
0x00063d0a	r_seq_ctrl0a	8'h00	RW	[7:0] r_reg3[15:8]
0x00063d0b	r_seq_ctrl0b	8'h00	RW	[7:0] r_reg3[7:0]
0x00063d0c	r_seq_ctrl0c	8'h00	RW	[7:0] r_reg4[31:24]
0x00063d0d	r_seq_ctrl0d	8'h00	RW	[7:0] r_reg4[23:16]
0x00063d0e	r_seq_ctrl0e	8'h00	RW	[7:0] r_reg4[15:8]
0x00063d0f	r_seq_ctrl0f	8'h00	RW	[7:0] r_reg4[7:0]
0x00063d10	r_seq_ctrl10	8'h00	RW	[7:0] r_reg5[31:24]
0x00063d11	r_seq_ctrl11	8'h00	RW	[7:0] r_reg5[23:16]
0x00063d12	r_seq_ctrl12	8'h00	RW	[7:0] r_reg5[15:8]
0x00063d13	r_seq_ctrl13	8'h00	RW	[7:0] r_reg5[7:0]
0x00063d14	r_seq_ctrl14	8'h00	RW	[7:0] r_reg6[31:24]
0x00063d15	r_seq_ctrl15	8'h00	RW	[7:0] r_reg6[23:16]

PRELIMINARY CONFIDENTIAL

Address	Register name	Default value	R/W	Descriptions
0x00063d16	r_seq_ctrl16	8'h00	RW	[7:0] r_reg6[15:8]
0x00063d17	r_seq_ctrl17	8'h00	RW	[7:0] r_reg6[7:0]
0x00063d18	r_seq_ctrl18	8'h00	RW	[7:0] r_reg7[31:24]
0x00063d19	r_seq_ctrl19	8'h00	RW	[7:0] r_reg7[23:16]
0x00063d1a	r_seq_ctrl1a	8'h00	RW	[7:0] r_reg7[15:8]
0x00063d1b	r_seq_ctrl1b	8'h00	RW	[7:0] r_reg7[7:0]
0x00063d1c	r_seq_ctrl1c	8'h00	RW	[7:0] r_reg8[31:24]
0x00063d1d	r_seq_ctrl1d	8'h00	RW	[7:0] r_reg8[23:16]
0x00063d1e	r_seq_ctrl1e	8'h00	RW	[7:0] r_reg8[15:8]
0x00063d1f	r_seq_ctrl1f	8'h00	RW	[7:0] r_reg8[7:0]
0x00063d20	r_seq_ctrl20	8'h00	RW	[7:0] r_reg9[31:24]
0x00063d21	r_seq_ctrl21	8'h00	RW	[7:0] r_reg9[23:16]
0x00063d22	r_seq_ctrl22	8'h00	RW	[7:0] r_reg9[15:8]
0x00063d23	r_seq_ctrl23	8'h00	RW	[7:0] r_reg9[7:0]
0x00063d24	r_seq_ctrl24	8'h00	RW	[7:0] r_reg10[31:24]
0x00063d25	r_seq_ctrl25	8'h00	RW	[7:0] r_reg10[23:16]
0x00063d26	r_seq_ctrl26	8'h00	RW	[7:0] r_reg10[15:8]
0x00063d27	r_seq_ctrl27	8'h00	RW	[7:0] r_reg10[7:0]
0x00063d28	r_seq_ctrl28	8'h00	RW	[7:0] r_reg11[31:24]
0x00063d29	r_seq_ctrl29	8'h00	RW	[7:0] r_reg11[23:16]
0x00063d2a	r_seq_ctrl2a	8'h00	RW	[7:0] r_reg11[15:8]
0x00063d2b	r_seq_ctrl2b	8'h00	RW	[7:0] r_reg11[7:0]
0x00063d2c	r_seq_ctrl2c	8'h00	RW	[7:0] r_reg12[31:24]
0x00063d2d	r_seq_ctrl2d	8'h00	RW	[7:0] r_reg12[23:16]
0x00063d2e	r_seq_ctrl2e	8'h00	RW	[7:0] r_reg12[15:8]
0x00063d2f	r_seq_ctrl2f	8'h00	RW	[7:0] r_reg12[7:0]
0x00063d30	r_seq_ctrl30	8'h00	RW	[7:0] r_reg13[31:24]

PRELIMINARY CONFIDENTIAL

Address	Register name	Default value	R/W	Descriptions
0x00063d31	r_seq_ctrl31	8'h00	RW	[7:0] r_reg13[23:16]
0x00063d32	r_seq_ctrl32	8'h00	RW	[7:0] r_reg13[15:8]
0x00063d33	r_seq_ctrl33	8'h00	RW	[7:0] r_reg13[7:0]
0x00063d34	r_seq_ctrl34	8'h00	RW	[7:0] r_reg14[31:24]
0x00063d35	r_seq_ctrl35	8'h00	RW	[7:0] r_reg14[23:16]
0x00063d36	r_seq_ctrl36	8'h00	RW	[7:0] r_reg14[15:8]
0x00063d37	r_seq_ctrl37	8'h00	RW	[7:0] r_reg14[7:0]
0x00063d38	r_seq_ctrl38	8'h00	RW	[7:0] r_reg15[31:24]
0x00063d39	r_seq_ctrl39	8'h00	RW	[7:0] r_reg15[23:16]
0x00063d3a	r_seq_ctrl3a	8'h00	RW	[7:0] r_reg15[15:8]
0x00063d3b	r_seq_ctrl3b	8'h00	RW	[7:0] r_reg15[7:0]
0x00063d3c	r_seq_ctrl3c	8'h00	RW	[7:0] r_reg16[31:24]
0x00063d3d	r_seq_ctrl3d	8'h00	RW	[7:0] r_reg16[23:16]
0x00063d3e	r_seq_ctrl3e	8'h00	RW	[7:0] r_reg16[15:8]
0x00063d3f	r_seq_ctrl3f	8'h00	RW	[7:0] r_reg16[7:0]
0x00063d40	r_seq_ctrl40	8'h00	RW	[7:0] r_reg17[31:24]
0x00063d41	r_seq_ctrl41	8'h00	RW	[7:0] r_reg17[23:16]
0x00063d42	r_seq_ctrl42	8'h00	RW	[7:0] r_reg17[15:8]
0x00063d43	r_seq_ctrl43	8'h00	RW	[7:0] r_reg17[7:0]
0x00063d44	r_seq_ctrl44	8'h00	RW	[7:0] r_reg18[31:24]
0x00063d45	r_seq_ctrl45	8'h00	RW	[7:0] r_reg18[23:16]
0x00063d46	r_seq_ctrl46	8'h00	RW	[7:0] r_reg18[15:8]
0x00063d47	r_seq_ctrl47	8'h00	RW	[7:0] r_reg18[7:0]
0x00063d48	r_seq_ctrl48	8'h00	RW	[7:0] r_reg19[31:24]
0x00063d49	r_seq_ctrl49	8'h00	RW	[7:0] r_reg19[23:16]
0x00063d4a	r_seq_ctrl4a	8'h00	RW	[7:0] r_reg19[15:8]
0x00063d4b	r_seq_ctrl4b	8'h00	RW	[7:0] r_reg19[7:0]

PRELIMINARY CONFIDENTIAL

Address	Register name	Default value	R/W	Descriptions
0x00063d4c	r_seq_ctrl4c	8'h00	RW	[7:0] r_reg20[31:24]
0x00063d4d	r_seq_ctrl4d	8'h00	RW	[7:0] r_reg20[23:16]
0x00063d4e	r_seq_ctrl4e	8'h00	RW	[7:0] r_reg20[15:8]
0x00063d4f	r_seq_ctrl4f	8'h00	RW	[7:0] r_reg20[7:0]
0x00063d50	r_seq_ctrl50	8'h00	RW	[7:0] r_reg21[31:24]
0x00063d51	r_seq_ctrl51	8'h00	RW	[7:0] r_reg21[23:16]
0x00063d52	r_seq_ctrl52	8'h00	RW	[7:0] r_reg21[15:8]
0x00063d53	r_seq_ctrl53	8'h00	RW	[7:0] r_reg21[7:0]
0x00063d54	r_seq_ctrl54	8'h00	RW	[7:0] r_reg22[31:24]
0x00063d55	r_seq_ctrl55	8'h00	RW	[7:0] r_reg22[23:16]
0x00063d56	r_seq_ctrl56	8'h00	RW	[7:0] r_reg22[15:8]
0x00063d57	r_seq_ctrl57	8'h00	RW	[7:0] r_reg22[7:0]
0x00063d58	r_seq_ctrl58	8'h00	RW	[7:0] r_reg23[31:24]
0x00063d59	r_seq_ctrl59	8'h00	RW	[7:0] r_reg23[23:16]
0x00063d5a	r_seq_ctrl5a	8'h00	RW	[7:0] r_reg23[15:8]
0x00063d5b	r_seq_ctrl5b	8'h00	RW	[7:0] r_reg23[7:0]
0x00063d5c	r_seq_ctrl5c	8'h00	RW	[7:0] r_reg24[31:24]
0x00063d5d	r_seq_ctrl5d	8'h00	RW	[7:0] r_reg24[23:16]
0x00063d5e	r_seq_ctrl5e	8'h00	RW	[7:0] r_reg24[15:8]
0x00063d5f	r_seq_ctrl5f	8'h00	RW	[7:0] r_reg24[7:0]
0x00063d60	r_seq_ctrl60	8h0f	RW	[7:4] reserved [3:0] r_seq_mode_sel[11:8]
0x00063d61	r_seq_ctrl61	8'hff	RW	[7:0] r_seq_mode_sel[7:0]
0x00063d62	r_seq_ctrl62	8'h00	RW	[7] reserved [6:4] r_start_sel_m2_b[2:0] [3] reserved [2:0] r_start_sel_m2_a[2:0]
0x00063d63	r_seq_ctrl63	8'h00	RW	[7] reserved [6:4] r_start_sel_m1_11[2:0]

PRELIMINARY CONFIDENTIAL

Address	Register name	Default value	R/W	Descriptions
				[3] reserved [2:0] r_start_sel_m1_10[2:0]
0x00063d64	r_seq_ctrl64	8'h00	RW	[7] reserved [6:4] r_start_sel_m1_9[2:0] [3] reserved [2:0] r_start_sel_m1_8[2:0]
0x00063d65	r_seq_ctrl65	8'h00	RW	[7] reserved [6:4] r_start_sel_m1_7[2:0] [3] reserved [2:0] r_start_sel_m1_6[2:0]
0x00063d66	r_seq_ctrl66	8'h00	RW	[7] reserved [6:4] r_start_sel_m1_5[2:0] [3] reserved [2:0] r_start_sel_m1_4[2:0]
0x00063d67	r_seq_ctrl67	8'h00	RW	[7] reserved [6:4] r_start_sel_m1_3[2:0] [3] reserved [2:0] r_start_sel_m1_2[2:0]
0x00063d68	r_seq_ctrl68	8'h00	RW	[7] reserved [6:4] r_start_sel_m1_1[2:0] [3] reserved [2:0] r_start_sel_m1_0[2:0]
0x00063d69	r_seq_ctrl69	8'h00	RW	[7:6] reserved [5:0] r_start_fw[13:8]
0x00063d6a	r_seq_ctrl6a	8'h00	RW	[7:0] r_start_fw[7:0]
0x00063d6b	r_seq_ctrl6b	8'h00	RW	[7:6] reserved [5] write_clear_en for interrupts, write '1' to a interrupt bit to clear it [4:0] r_int_en[12:8]
0x00063d6c	r_seq_ctrl6c	8'h00	RW	[7:0] r_int_en[7:0]
0x00063d6d	r_seq_ctrl6d	8'h00	RW	[7:3] reserved [2:0] r_denominator_div[26:24]
0x00063d6e	r_seq_ctrl6e	8'h00	RW	[7:0] r_denominator_div[23:16]
0x00063d6f	r_seq_ctrl6f	8'h00	RW	[7:0] r_denominator_div[15:8]

PRELIMINARY CONFIDENTIAL

Address	Register name	Default value	R/W	Descriptions
0x00063d70	r_seq_ctrl70	8'h00	RW	[7:0] r_denominator_div[7:0]
0x00063d71	r_seq_ctrl71	4'h0f	RW	[7:4] reserved [3:0] r_seq_gpio_en[11:8] for gpio10~13
0x00063d72	r_seq_ctrl72	8'hff	RW	[7:0] r_seq_gpio_en[7:0] for gpio2~9 When gpio_sel = 0, gpio2~gpio13 are served as output only gpio, reg 63d71~ 63d74 are the control registers
0x00063d73	r_seq_ctrl73	4'h00	RW	[7:4] reserved [3:0] r_seq_gpio[11:8] for gpio10~13
0x00063d74	r_seq_ctrl74	8'h00	RW	[7:0] r_seq_gpio[7:0] for gpio2~9
0x00063d75	r_seq_ctrl75	8'h00	RW	[7:5] reserved [4:0] int_reg[12:8]
0x00063d76	r_seq_ctrl76	8'h00	RW	[7:0] int_reg[7:0]
0x00063d77	r_seq_ctrl77	8'h00	RW	[7:5] reserved [4:0] test for int_reg[12:8]
0x00063d78	r_seq_ctrl78	8'h00	RW	[7:0] test for int_reg[7:0]

6.1 MAC Register

Address	Register name	Default value	R/W	Descriptions
0x00063b00	BASE_ADDRESS0_0	8'h00	RW	[7:0] base_address0[31:24]
0x00063b01	BASE_ADDRESS0_1	8'h00	RW	[7:0] base_address0[23:16]
0x00063b02	BASE_ADDRESS0_2	8'h00	RW	[7:0] base_address0[15:8]
0x00063b03	BASE_ADDRESS0_3	8'h00	RW	[7:0] base_address0[7:0]
0x00063b04	BASE_ADDRESS1_0	8'h00	RW	[7:0] base_address1[31:24]
0x00063b05	BASE_ADDRESS1_1	8'h00	RW	[7:0] base_address1[23:16]
0x00063b06	BASE_ADDRESS1_2	8'h00	RW	[7:0] base_address1[15:8]
0x00063b07	BASE_ADDRESS1_3	8'h00	RW	[7:0] base_address1[7:0]

PRELIMINARY CONFIDENTIAL

Address	Register name	Default value	R/W	Descriptions
0x00063b08	BASE_ADDRESS2_0	8'h00	RW	[7:0] base_address2[31:24]
0x00063b09	BASE_ADDRESS2_1	8'h00	RW	[7:0] base_address2[23:16]
0x00063b0a	BASE_ADDRESS2_2	8'h00	RW	[7:0] base_address2[15:8]
0x00063b0b	BASE_ADDRESS2_3	8'h00	RW	[7:0] base_address2[7:0]
0x00063b0c	BASE_ADDRESS3_0	8'h00	RW	[7:0] base_address3[31:24]
0x00063b0d	BASE_ADDRESS3_1	8'h00	RW	[7:0] base_address3[23:16]
0x00063b0e	BASE_ADDRESS3_2	8'h00	RW	[7:0] base_address3[15:8]
0x00063b0f	BASE_ADDRESS3_3	8'h00	RW	[7:0] base_address3[7:0]
0x00063b10	BASE_ADDRESS4_0	8'h00	RW	[7:0] base_address4[31:24]
0x00063b11	BASE_ADDRESS4_1	8'h00	RW	[7:0] base_address4[23:16]
0x00063b12	BASE_ADDRESS4_2	8'h00	RW	[7:0] base_address4[15:8]
0x00063b13	BASE_ADDRESS4_3	8'h00	RW	[7:0] base_address4[7:0]
0x00063b14	BASE_ADDRESS5_0	8'h00	RW	[7:0] base_address5[31:24]
0x00063b15	BASE_ADDRESS5_1	8'h00	RW	[7:0] base_address5[23:16]
0x00063b16	BASE_ADDRESS5_2	8'h00	RW	[7:0] base_address5[15:8]
0x00063b17	BASE_ADDRESS5_3	8'h00	RW	[7:0] base_address5[7:0]
0x00063b18	BASE_ADDRESS6_0	8'h00	RW	[7:0] base_address6[31:24]
0x00063b19	BASE_ADDRESS6_1	8'h00	RW	[7:0] base_address6[23:16]
0x00063b1a	BASE_ADDRESS6_2	8'h00	RW	[7:0] base_address6[15:8]
0x00063b1b	BASE_ADDRESS6_3	8'h00	RW	[7:0] base_address6[7:0]
0x00063b1c	BASE_ADDRESS7_0	8'h00	RW	[7:0] base_address7[31:24]
0x00063b1d	BASE_ADDRESS7_1	8'h00	RW	[7:0] base_address7[23:16]
0x00063b1e	BASE_ADDRESS7_2	8'h00	RW	[7:0] base_address7[15:8]
0x00063b1f	BASE_ADDRESS7_3	8'h00	RW	[7:0] base_address7[7:0]
0x00063b20	BASE_ADDRESS8_0	8'h00	RW	[7:0] base_address8[31:24]
0x00063b21	BASE_ADDRESS8_1	8'h00	RW	[7:0] base_address8[23:16]
0x00063b22	BASE_ADDRESS8_2	8'h00	RW	[7:0] base_address8[15:8]

PRELIMINARY CONFIDENTIAL

Address	Register name	Default value	R/W	Descriptions
0x00063b23	BASE_ADDRESS8_3	8'h00	RW	[7:0] base_address8[7:0]
0x00063b24	BASE_ADDRESS9_0	8'h00	RW	[7:0] base_address9[31:24]
0x00063b25	BASE_ADDRESS9_1	8'h00	RW	[7:0] base_address9[23:16]
0x00063b26	BASE_ADDRESS9_2	8'h00	RW	[7:0] base_address9[15:8]
0x00063b27	BASE_ADDRESS9_3	8'h00	RW	[7:0] base_address9[7:0]
0x00063b28	BASE_ADDRESS10_0	8'h00	RW	[7:0] base_address10[31:24]
0x00063b29	BASE_ADDRESS10_1	8'h00	RW	[7:0] base_address10[23:16]
0x00063b2a	BASE_ADDRESS10_2	8'h00	RW	[7:0] base_address10[15:8]
0x00063b2b	BASE_ADDRESS10_3	8'h00	RW	[7:0] base_address10[7:0]
0x00063b2c	BASE_ADDRESS11_0	8'h00	RW	[7:0] base_address11[31:24]
0x00063b2d	BASE_ADDRESS11_1	8'h00	RW	[7:0] base_address11[23:16]
0x00063b2e	BASE_ADDRESS11_2	8'h00	RW	[7:0] base_address11[15:8]
0x00063b2f	BASE_ADDRESS11_3	8'h00	RW	[7:0] base_address11[7:0]
0x00063b30	RDY_BASE_ADDRESS	2'h00	RW	[7:2] reserved [1] w_rdy_1 [0] w_rdy_0
0x00063b31	FORCE OVERFLOW	8'hc0	RW	[7] read only, stat of current write cycle, 0 or 1 [6] read only, stat of current read cycle [5] w_drop indication, read only [1] write only soft reset [0] force-overflow, write 1 to force overflow
0x00063b32	INT_CTRL1	2'h00	RW	[7:2] reserved [1] r_int_done [0] w_int_frame_start
0x00063b33	INT_CTRL0	8'h00	RW	[7] w_int_overflow1 [6] w_int_drop1 [5] w_int_done1 [4] w_int_start1 [3] w_int_overflow0 [2] w_int_drop0 [1] w_int_done0

PRELIMINARY CONFIDENTIAL

Address	Register name	Default value	R/W	Descriptions
				[0] w_int_start0
0x00063b34	W_FORMAT_CTRL	7'h20	RW	[7:6] reserved [5] overflow_dly_en [4] write_clear_en for interrupts, write '1' to the interrupt bit will clear it [3:0] w_dat_fmt bit3: 3d_enable bit2~0: 3'd0: RAW8 // low 8 bits 3'd1: RAW10 3'd2: RAW12 3'd3: YUV422 3'd4: NV12 3'd5: RGB565 3'd6: RGB888 // only in normal mode 3'd7: YUV420
0x00063b35	W_SWITCH_CTRL	7'h00	RW	[7] reserved [6] r_byte_switch2 [5] r_byte_switch1 [4] r_rb_switch // for RGB565 [3] w_byte_switch2 [2] w_byte_switch1 [1] w_rb_switch2 // for RGB888 [0] w_rb_switch1 // for RGB565
0x00063b36	W_IMAGE_WIDTH_1	5'h00	RW	[7:5] reserved [4:0] w_image_width[12:8]
0x00063b37	W_IMAGE_WIDTH_0	8'h00	RW	[7:0] w_image_width[7:0]
0x00063b38	W_MEM_WIDTH_1	6'h00	RW	[7:6] reserved [5:0] w_mem_width[13:8]
0x00063b39	W_MEM_WIDTH_0	8'h00	RW	[7:0] w_mem_width[7:0]
0x00063b3a	W_MEM_HEIGHT_1	5'h00	RW	[7:5] reserved [4:0] w_mem_height[12:8]
0x00063b3b	W_MEM_HEIGHT_0	8'h00	RW	[7:0] w_mem_height[7:0]
0x00063b3c	W_BUF_AFUL_CTR1	8'h00	RW	[7:0] w_buf_aful_thre[15:8]
0x00063b3d	W_BUF_AFUL_CTR0	8'h00	RW	[7:0] w_buf_aful_thre[7:0]

PRELIMINARY CONFIDENTIAL

Address	Register name	Default value	R/W	Descriptions
0x00063b3e	W_OUTSTD_CTR	6'h1f	RW	[7:6] reserved [5:3] w_outstd_normal[2:0] [2:0] w_outstd_max[2:0]
0x00063b3f	R_IMAGE_WIDTH_1	5'h00	RW	[7:5] reserved [4:0] r_image_width[12:8]
0x00063b40	R_IMAGE_WIDTH_0	8'h00	RW	[7:0] r_image_width[7:0]
0x00063b41	R_IMAGE_HEIGHT_1	5'h00	RW	[7:5] reserved [4:0] r_image_height[12:8]
0x00063b42	R_IMAGE_HEIGHT_0	8'h00	RW	[7:0] r_image_height[7:0]
0x00063b43	R_MEM_WIDTH_1	5'h00	RW	[7:5] reserved [4:0] r_mem_width[13:8]
0x00063b44	R_MEM_WIDTH_0	8'h00	RW	[7:0] r_mem_width[7:0]
0x00063b45	R_FORMAT_CTR	5'h00	RW	[7:4] reserved [4:0] r_dat_fmt bit4: drop_enable bit3: 3d_enable bit2~0: 3'd0: RAW8 // low 8 bits 3'd1: RAW10 3'd2: RAW12 3'd3: YUV422 3'd5: RGB565
0x00063b46				[7:0] reserved
0x00063b47	R_OUTSTD_CTR	3'h02	RW	[7:3] reserved [2:0] r_outstd_max[2:0]
0x00063b48	SHADOW_INT_CTRL1	2'h00	RW	[7:2] reserved [1] r_int_done [0] w_int_frame_start
0x00063b49	SHADOW_INT_CTRL0	8'h00	RW	[7] w_int_overflow1 [6] w_int_drop1 [5] w_int_done1 [4] w_int_start1 [3] w_int_overflow0 [2] w_int_drop0 [1] w_int_done0

PRELIMINARY CONFIDENTIAL

Address	Register name	Default value	R/W	Descriptions
				[0] w_int_start0
0x00063b4a	TEST_INT_CTRL1	2'h00	RW	[7:2] reserved [1] r_int_done [0] w_int_frame_start
0x00063b4b	TEST_INT_CTRL0	8'h00	RW	[7] w_int_overflow1 [6] w_int_drop1 [5] w_int_done1 [4] w_int_start1 [3] w_int_overflow0 [2] w_int_drop0 [1] w_int_done0 [0] w_int_start0
0x00063b4c	DFS_CTL0	3'h00	RW	[7:3] reserved [2] dfs_en [1:0] dfs_watermark[9:8]
0x00063b4d	DFS_CTL1	8'h00	RW	[7:0] dfs_watermark[7:0]
0x00063b4e	INT_XCNT	8'hfe	RW	[7:0] int_xcnt
0x00063b4f	INT_CNT1_CTL0	5'h03	RW	[7:5] reserved [4:0] int_cnt1[12:8]
0x00063b50	INT_CNT1_CTL1	8'h20	RW	[7:0] int_cnt1[7:0]
0x00063b51	INT_CNT2_CTL0	8'h53	RW	[7:4] int1_cnt2 [3:0] int0_cnt2
0x00063b52	INT_CNT2_CTL1	8'h10	RW	[7:4] reserved [3:0] int2_cnt2
0x00063b53	INT_EN_CTRL1	2'h00	RW	[7:2] reserved [1] r_int_done [0] w_int_frame_start
0x00063b54	INT_EN_CTRL0	8'h00	RW	[7] w_int_overflow1 [6] w_int_drop1 [5] w_int_done1 [4] w_int_start1 [3] w_int_overflow0 [2] w_int_drop0 [1] w_int_done0 [0] w_int_start0

PRELIMINARY CONFIDENTIAL

Address	Register name	Default value	R/W	Descriptions
0x00063b55	W_IMAGE_HEIGHT	5'h00	RW	[7:5] reserved [4:0] w_image_height [12:8]
0x00063b56	W_IMAGE_HEIGHT	8'h00	RW	[7:0] w_image_height [7:0]
0x00063b57	RDY_BASE_ADDR	2'h00	RW	[7:2] reserved [1:0] base address read ready[3:2]
0x00063b58	LPP_CTRL_58	8'h00	RW	[7:3] reserved [2] line pingpang enable [1] line pingpang int1 enable [0] line pingpang int0 enable
0x00063b59	LPP_CNT_0	8'h00	RW	[7:4] reserved [3:0] lpp_cnt[11:8]
0x00063b5a	LPP_CNT_1	8'h08	RW	[7:0] lpp_cnt[7:0]
0x00063b5b	CTRL_5b		RO	[7:2] 6'b0 [1] lpp_int1 [0] lpp_int0
0x00063b5c	LPP_RDY		RW	[7:2] reserved [1] lpp_rdy_1 [0] lpp_rdy_0
0x00063b5d				reserved
0x00063b5e				reserved
0x00063b5f				reserved
0x00063b60	BASE_ADDRESS12_0	8'h00	RW	[7:0] base_address12[31:24]
0x00063b61	BASE_ADDRESS12_1	8'h00	RW	[7:0] base_address12[23:16]
0x00063b62	BASE_ADDRESS12_2	8'h00	RW	[7:0] base_address12[15:8]
0x00063b63	BASE_ADDRESS12_3	8'h00	RW	[7:0] base_address12[7:0]
0x00063b64	BASE_ADDRESS13_0	8'h00	RW	[7:0] base_address13[31:24]
0x00063b65	BASE_ADDRESS13_1	8'h00	RW	[7:0] base_address13[23:16]
0x00063b66	BASE_ADDRESS13_2	8'h00	RW	[7:0] base_address13[15:8]
0x00063b67	BASE_ADDRESS13_3	8'h00	RW	[7:0] base_address13[7:0]
0x00063b68	BASE_ADDRESS14_0	8'h00	RW	[7:0] base_address14[31:24]

PRELIMINARY CONFIDENTIAL

Address	Register name	Default value	R/W	Descriptions
0x00063b69	BASE_ADDRESS14_1	8'h00	RW	[7:0] base_address14[23:16]
0x00063b6a	BASE_ADDRESS14_2	8'h00	RW	[7:0] base_address14[15:8]
0x00063b6b	BASE_ADDRESS14_3	8'h00	RW	[7:0] base_address14[7:0]
0x00063b6c	BASE_ADDRESS15_0	8'h00	RW	[7:0] base_address15[31:24]
0x00063b6d	BASE_ADDRESS15_1	8'h00	RW	[7:0] base_address15[23:16]
0x00063b6e	BASE_ADDRESS15_2	8'h00	RW	[7:0] base_address15[15:8]
0x00063b6f	BASE_ADDRESS15_3	8'h00	RW	[7:0] base_address15[7:0]

6.38 TOP System Control Register

Address	Register name	Default value	R/W	Descriptions
0x00060100	R0100	8'h01	RW	[4:1] Reserved [0] software standby
0x00060103	R0103	N/A	W	[0] software reset
0x0006300c	sccb_id	8'h6c	RW	Debug mode SCCB slave ID
0x00063010	roi ctrl	8'h00	RW	[7:2] reserved [1] roi_size 0:32x32 1:48x48 [0] roi enable
0x00063011	roi_wait_num	8'h00	RW	[7:0] wait time after eof
0x00063012	roi_x_offset_o	8'h00	RW	[15:8]
0x00063013	roi_x_offset_o	8'h00	RW	[7:0]
0x00063014	roi_y_offset_o	8'h00	RW	[15:8]
0x00063015	roi_y_offset_o	8'h00	RW	[7:0]
0x00063110	r_spi_ctrl	8'h00	RW	[1] spi byteswap [0] spi enable
0x00063111	r_spi_fmt	8'h00	RW	[1:0] 0:yuv422 1:rgb565 2:raw8 3:raw10
0x00063112	r_spi_data_id	8'h00	RW	[7:0] spi sensor data id
0x00063113	r_spi_img_w	8'h00	RW	[15:8] spi image hsize

PRELIMINARY CONFIDENTIAL

Address	Register name	Default value	R/W	Descriptions
0x00063114	r_spi_img_w	8'h00	RW	[7:0] spi image hsize
0x00063115	r_spi_img_h	8'h00	RW	[15:8] spi image vsize
0x00063116	r_spi_img_h	8'h00	RW	[7:0] spi image vsize
0x0006301a	clkrst0	8'h70	RW	[6] sccb master 2 clock enable [5] sccb master 1 clock enable [2] sccb master 2 reset [1] sccb master 1 reset [0] cclk reset
0x0006301b	clkrst1	8'hb4	RW	[6] isp clock enable [2] isp reset
0x0006301c	clkrst2	8'hf0	RW	[7] dvp clock enable [5] cif clock enable [3] dvp reset [1] cif reset
0x00063022	core_ctrl[15:8]	8'h80	RW	[7] ling time out select for AHB [6] big endian for AHB. 1: big endian, 0:little endian [5] reserved [4:2] isp input format 000: raw8 001: raw10 010: raw12 011: raw14 1xx: yuv422 [1] isp bypass (1: bypass) [0] isp ready for mac
0x00063023	core_ctrl[7:0]	8'h00	RW	[7] reserved [6:4] cclk2 divider [3] reserved [2:0] cclk0 divider
0x00063024	core_ctrl1[15:8]	8'h00	RW	[7] mac sram_rfifo1 cen [6] mac sram_rfifo0_cen [5] sram_dbuf_cen for mac [4] sram lbuf cen for mac [3] oen for mcu sram [2] cen for mcu sram [1] global oen for mcu sram

PRELIMINARY CONFIDENTIAL

Address	Register name	Default value	R/W	Descriptions
				[0] global cen for mcu sram
0x00063025	core_ctrl1[7:0]	8'h21	RW	[7:4] debug dvp delay [3:2] debug dvp clock divider [1] bypass mode [0] register ack time out enable
0x00063026	sc_reg_ctrl26	8'h00	RW	[6] aec sram access enable [5] cif sram access enable [4] mcu data ram access enable [3] mcu pram access enable [2] mcu data ram access enable [1] mcu data cache ram access enable [0] mcu instruction cache ram access enable
0x00063027	sc_reg_ctrl27	8'h00	RW	[7] awb1 ram access enable [6] cip7 ram access enable [5] cip6 ram access enable [4] cip5 ram access enable [3] cip4 ram access enable [2] cip3 ram access enable [1] cip2 ram access enable [0] cip1 ram access enable
0x00063028	sc_reg_ctrl28	8'h00	RW	[7] scale2 ram access enable [6] scale1 ram access enable [5] uv dns ram access enable [4] bin ram access enable [3] afc2 ram access enable [2] afc1 ram access enable [1] dpc ram access enable [0] awb2 ram access enable
0x00063029	sc_reg_ctrl29	8'h00	RW	[7:6] reserved [5] tone mapping ram access enable [4] anti shake ram access enable [3] lenc ol4 ram access enable [2] lenc ol3 ram access enable [1] lenc ol2 ram access enable [0] lenc ol1 ram access enable
0x0006302a	sc_reg_ctrl2a	8'h00	RW	[7:4] reserved [3] mac rbuf1 ram access enable

PRELIMINARY CONFIDENTIAL

Address	Register name	Default value	R/W	Descriptions
				[2] mac rbuf0 ram access enable [1] mac dbuf ram access enable [0] mac lbuf ram access enable
0x0006302b	rs232_id	8'h6e	RW	debug rs232 id
0x0006302f	gpio_ctrl[23:16]	8'h00	RW	[4] sn_fsin1_oen_o 1 for input and 0 for output [3] sn_fsin0_oen_o 1 for input and 0 for output [2] gc1_oen when debug_sccb = 0 [1] gc0_oen when debug_sccb = 0 [0] gpio_sel 1 served as sn_ctrl_o 0 served as output only gpio
0x00063030	gpio_ctrl[15:8]	8'h40	RW	[7] debug_enable [6] debug_sccb [5] gc1_o output when debug_sccb = 0 [4] gc0_o output when debug_sccb = 0 [3] manual sn_frex1_o, when gpio_sel = 1, gpio13 [2] manual sn_frex0_o, when gpio_sel = 1, gpio12 [1] manual pwnd_o, when gpio_sel = 1, gpio11 [0] manual sn_shutter1_o, when gpio_sel = 1, gpio10
0x00063031	gpio_ctrl[7:0]	8'h00	RW	[7] manual sn_shutter0_o, when gpio_sel = 1, gpio9 [6] manula sn_pwdn2_o, when gpio_sel = 1, gpio8 [5] manual sn_pwdn1_o, when gpio_sel = 1, gpio7 [4] manual sn_pwdn0_o, when gpio_sel = 1, gpio6 [3] manual sn_fsin1_o, when gpio_sel = 1, gpio5 [2] manual sn_fsin0_o, when gpio_sel = 1, gpio4 [1] manual sn_rst_n1_o, when gpio_sel = 1, gpio3 [0] manual sn_rst_n0_o , when gpio_sel = 1, gpio2 When gpio_sel = 1, gpio2~gpio13 are served as sn_ctrl_o, reg 63030 and reg 63031 are the control reg
0x0006303c	gpio_ctrl	8'h00	RW	[7:1] reserved [0] pwdn_i
0x0006303f	gpio_ctrl	8'h00	RW	[7:6] reserved [5] gc1_i [4] gc0_i [3] sn_strobe1_i [2] sn_strobe0_i [1] sn_fsin1_i

PRELIMINARY CONFIDENTIAL

Address	Register name	Default value	R/W	Descriptions
				[0] sn_fsin0_i
0x00063041	clkrst6	8'hf0	RW	[7:6] reserved [5] intr_reg clock enable [4:2] reserved [1] intr_reg reset [0] reserved
0x00063042	clkrst7	8'hf9	RW	[7] mcu wb clock enable [6] mcu dataram clock enable [5] mcu pram clock enable [4] mcu clock enable [3] mcu wb reset [2] mcu dataram reset [1] mcu pram reset [0] mcu reset
0x00063047	clkrst8	8'hf0	R/W	[7] mac clock enable [5] idi clock enable [5] dma clock enable [4] reserved [3] mac reset [2] idi reset [1] dma reset [0] reserved

6.39 DVP Register

Address	Register name	Default value	R/W	Descriptions
0x00063100	dfr	8'h30	RW	[7] ccir656 mode [6] delay_vsync [5] trig_edge_mode [4] raw_mode_o [3:0] swap format
0x00063101	fdrp	8'h10	RW	[7] m48 mode [6] reserved [5] drop enable [4] even droop

PRELIMINARY CONFIDENTIAL

Address	Register name	Default value	R/W	Descriptions
				[3:0] select frame number
0x00063102	com	5'h00	RW	Common Control [7:5] reserved [4] vsync input invert enable [3] href input invert enable [2] hsync mode [1] remove glitch [0] frame control enable
0x00063103	frame nu	8'h00	RW	frame control [7:4] frame on number [3:0] frame off number
0x00063104	hsize[12:8]	8'h14	RW	[4:0] image hsize[12:8] for re-timing 3d mode
0x00063105	hsize[7:0]	8'h2c	RW	[7:0] image hsize [7:0] for re-timing 3d mode
0x00063106	visze[12:8]	5'h0f	RW	[4:0]: image vsize[12:8] for re-timing 3d mode
0x00063107	vsize[7:0]	8'h20	RW	[7:0]: image vsize[7:0] for re-timing 3d mode
0x00063108	r_ctrl[15:8]	8'h00	RW	frame control input select [7:4]: reserved [3:0]: input select 4'h0: dvp 4'h1: re-timing 4'h2: mac 4'h4: mipi1 4'h8: mipi 2
0x00063109	r_ctrl[7:0]	8'h00	RW	re-timing module control signal [7:6] reserved [5] pack64 enable [4] rgb888 enable [3] hdr8810 for rtm [2] if3dmode [1] right_data_fo [0] vrtm enable

PRELIMINARY CONFIDENTIAL

6.40 DMA Register

Address	Register name	Default value	R/W	Descriptions
0x00063304	r_emb_lcnt[15:8]	8'h00	RW	embedded line count [7:0]: r_emb_lcnt[15:8]
0x00063305	r_emb_lcnt[7:0]	8'h0b	RW	embedded line count [7:0]: r_emb_lcnt[7:0]
0x00063306	r_emb_lcnt_sel	8'h00	RW	[7:1]: reserved [0]: embedded line select
0x00063307	emb_dly_cnt	8'h06	RW	embedded line delay [7:3] reserved [2:0] embedded line delay
0x00063308	emb_addr[31:24]	8'h00	RW	embedded address [7:0]: emb_addr[31:24]
0x00063309	emb_addr[23:16]	8'h06	RW	embedded address [7:0]: emb_addr[23:16]
0x0006330a	emb_addr[15:8]	8'h68	RW	embedded address [7:0]: emb_addr[15:8]
0x0006330b	emb_addr[7:0]	8'h10	RW	embedded address [7:0]: emb_addr[7:0]
0x0006330c	emb_sel	8'h01	RW	embedded select [7:4]: reserved [3:0]: embedded select
0x0006330d	emb_ori_addr_hi[15:8]	8'h00	RW	embedded original high [7:0] emb_ori_addr_hi[15:8]
0x0006330e	emb_ori_addr_hi[7:0]	8'h06	RW	embedded original high [7:0] emb_ori_addr_hi[7:0]
0x00063310	dma_status[4:0]	N/A	R	dma status

6.41 SCCB Master1 Register

Address	Register name	Default value	R/W	Descriptions
0x00063600	sccb speed	8'h01	RW	sccb speed

PRELIMINARY CONFIDENTIAL

Address	Register name	Default value	R/W	Descriptions
				[7:0]: sccb speed
0x00063601	sccb slave id	8'h6c	RW	sccb slave id [7:0]: slave id
0x00063602	sccb address [15:8]	8'h00	RW	sccb address [7:0]: sccb_address[15:8]
0x00063603	sccb address [7:0]	8'h5a	RW	sccb address [7:0]: sccb_address[7:0]
0x00063604	sccb output data [15:8]	8'hf1	RW	sccb output data [7:0]: sccb_do[15:8]
0x00063605	sccb output data [7:0]	8'h1f	RW	sccb output data [7:0]: sccb_do[7:0]
0x00063606	sccb 2byte control	2'h0	RW	sccb 16-bit control [1]: 16-bit data enable [0]: 16-bit address enable
0x00063607	sccb input data[15:8]	N/A	R	data from sccb slave [7:0]: data_in[15:8]
0x00063608	sccb input data[7:0]	N/A	R	data from sccb slave [7:0]: data_in[7:0]
0x00063609	sccb command	8'h00	RW	sccb command control [7]: ls_ack [6]: ls_id_r [5]: ls_stop [4]: ls_start [3]: ls_datar [2]: ls_dataw [1]: ls_addr [0]: ls_id
0x0006360a	sccb status	3'h06	R	sccb status [7:3]: reserved [2]: ack_in [1]: ms_scs_n [0]: sccb master busy

PRELIMINARY CONFIDENTIAL

6.42 SCCB Master2 Register

Address	Register name	Default value	R/W	Descriptions
0x00063700	sccb speed	8'h01	RW	sccb speed [7:0]: sccb speed
0x00063701	sccb slave id	8'h6c	RW	sccb slave id [7:0]: slave id
0x00063702	sccb address [15:8]	8'h00	RW	sccb address [7:0]: sccb_address[15:8]
0x00063703	sccb address [7:0]	8'h5a	RW	sccb address [7:0]: sccb_address[7:0]
0x00063704	sccb output data [15:8]	8'hf1	RW	sccb output data [7:0]: sccb_do[15:8]
0x00063705	sccb output data [7:0]	8'h1f	RW	sccb output data [7:0]: sccb_do[7:0]
0x00063706	sccb 2byte control	2'h0	RW	sccb 16-bit control [1]: 16-bit data enable [0]: 16-bit address enable
0x00063707	sccb input data[15:8]	N/A	R	data from sccb slave [7:0]: data_in[15:8]
0x00063708	sccb input data[7:0]	N/A	R	data from sccb slave [7:0]: data_in[7:0]
0x00063709	sccb command	8'h00	RW	sccb command control [7]: ls_ack [6]: ls_id_r [5]: ls_stop [4]: ls_start [3]: ls_datar [2]: ls_dataw [1]: ls_addr [0]: ls_id
0x0006370a	sccb status	3'h06	R	sccb status [7:3]: reserved [2]: ack_in [1]: ms_scs_n [0]: sccb master busy

PRELIMINARY CONFIDENTIAL

6.43 Interrupt Register

Address	Register name	Default value	R/W	Descriptions
0x00063900	cmr0	8'h00	RW	command set register [7:0]: command set register 0
0x00063901	cmr1	8'h00	RW	command set register [7:0]: command set register 1
0x00063902	cmr2	8'h00	RW	command set register [7:0]: command set register 2
0x00063903	cmr3	8'h00	RW	command set register [7:0]: command set register 3
0x00063904	cmr4	8'h00	RW	command set register [7:0]: command set register 4
0x00063905	cmr5	8'h00	RW	command set register [7:0]: command set register 5
0x00063906	cmr6	8'h00	RW	command set register [7:0]: command set register 6
0x00063907	cmr7	8'h00	RW	command set register [7:0]: command set register 7
0x00063908	cmr8	8'h00	RW	command set register [7:0]: command set register 8
0x00063909	cmr9	8'h00	RW	command set register [7:0]: command set register 9
0x0006390a	cmr10	8'h00	RW	command set register [7:0]: command set register 10
0x0006390b	cmr11	8'h00	RW	command set register [7:0]: command set register 11
0x0006390c	cmr12	8'h00	RW	command set register [7:0]: command set register 12
0x0006390d	cmr13	8'h00	RW	command set register [7:0]: command set register 13
0x0006390e	cmr14	8'h00	RW	command set register [7:0]: command set register 14

PRELIMINARY CONFIDENTIAL

Address	Register name	Default value	R/W	Descriptions
0x0006390f	cmr15	8'h00	RW	command set register [7:0]: command set register 15
0x00063910	gpr0	8'h00	RW	general purpose register [7:0]: general purpose register 0
0x00063911	gpr1	8'h00	RW	general purpose register [7:0]: general purpose register 1
0x00063912	gpr2	8'h00	RW	general purpose register [7:0]: general purpose register 2
0x00063913	gpr3	8'h00	RW	general purpose register [7:0]: general purpose register 3
0x00063914	gpr4	8'h00	RW	general purpose register [7:0]: general purpose register 4
0x00063915	gpr5	8'h00	RW	general purpose register [7:0]: general purpose register 5
0x00063916	gpr6	8'h00	RW	general purpose register [7:0]: general purpose register 6
0x00063917	gpr7	8'h00	RW	general purpose register [7:0]: general purpose register 7
0x00063918~ 0x00063920				reserved
0x00063921	intr_clear[23:16]	8'h00	W	interrupt clear [7:4]: reserved [3]: isp_int [2]: dpc_update_s_int [1]: dpc_update_l_int [0]: stats_done
0x00063922	intr_clear[15:8]	8'h00	W	interrupt clear [7]: afc_stats_done [6]: reserved [5]: anti_shake_done [4]: reserved [3]: ct_awb_done [2]: combine_done [1]: tomp_done [0]: simple_awb_done

PRELIMINARY CONFIDENTIAL

Address	Register name	Default value	R/W	Descriptions
0x00063923	intr_clear[7:0]	8'h00	W	interrupt clear [7]: aec_done [6]: line_int [5]: isp_eof [4]: isp_sof [3]: reserved [2]: commandset_int [1]: mac_int [0]: gpio_int
0x00063924	intr_en[31:24]	8'h00	RW	interrupt enable [7:0]: reserved
0x00063925	intr_en[23:16]	8'h00	RW	interrupt enable [7:4]: reserved [3]: isp_int [2]: dpc_update_s_int [1]: dpc_update_l_int [0]: stats_done
0x00063926	intr_en[15:8]	8'h00	RW	interrupt enable [7]: afc_stats_done [6]: reserved [5]: anti_shake_done [4]: reserved [3]: ct_awb_done [2]: combine_done [1]: tomp_done [0]: simple_awb_done
0x00063927	intr_en[7:0]	8'h0a	RW	interrupt enable [7]: aec_done [6]: line_int [5]: isp_eof [4]: isp_sof [3]: reserved [2]: commandset_int [1]: mac_int [0]: gpio_int
0x00063928				reserved
0x00063929	intr_status[23:16]	n/a	R	interrupt status

PRELIMINARY CONFIDENTIAL

Address	Register name	Default value	R/W	Descriptions
				[7:4]: reserved [3]: isp_int [2]: dpc_update_s_int [1]: dpc_update_l_int [0]: stats_done
0x0006392a	intr_status[15:8]	n/a	R	interrupt status [7]: afc_stats_done [6]: reserved [5]: anti_shake_done [4]: reserved [3]: ct_awb_done [2]: combine_done [1]: tomp_done [0]: simple_awb_done
0x0006392b	intr_status[7:0]	n/a	R	interrupt status [7]: aec_done [6]: line_int [5]: isp_eof [4]: isp_sof [3]: reserved [2]: commandset_int [1]: mac_int [0]: gpio_int
0x00063930	timer_ctrl	3'h4	RW	timer control [7:3] reserved [2] read clear enable [1]: timer set [0]: timer reset
0x00063931	timer_ctrl_cnt[23:16]	N/A	R	timer counter [7:0]: timer_ctrl_cnt[23:16]
0x00063932	timer_ctrl_cnt[15:8]	N/A	R	timer counter [7:0]: timer_ctrl_cnt[15:8]
0x00063933	timer_ctrl_cnt[7:0]	N/A	R	timer counter [7:0]: timer_ctrl_cnt[7:0]

PRELIMINARY CONFIDENTIAL

6.44 IDI Register

Address	Register name	Default value	R/W	Descriptions
0x00063c00	X_OFFEST1	8'h00	RW	[7:5] reserved [4:0]: x offset1 [12:8]
0x00063c01	X_OFFEST1	8'h00	RW	[7:0]: x offset1 [7:0]
0x00063c02	Y_OFFEST1	8'h00	RW	[7:4] reserved [3:0]: y offset1 [11:8]
0x00063c03	Y_OFFEST1	8'h00	RW	[7:0]: y offset1 [7:0]
0x00063c04	WIDTH1	8'h14	RW	[7:5] reserved [4:0]: width1 [12:8]
0x00063c05	WIDTH1	8'h30	RW	[7:0]: width1 [7:0]
0x00063c06	HEIGHT1	8'h0f	RW	[7:4] reserved [3:0]: height1 [11:8]
0x00063c07	HEIGHT1	8'h20	RW	[7:0]: height1 [7:0]
0x00063c08	X_OFFSET2	8'h00	RW	[7:5] reserved [4:0]: x offset2 [12:8]
0x00063c09	X_OFFSET2	8'h00	RW	[7:0]: x offset2 [7:0]
0x00063c0a	Y_OFFSET2	8'h00	RW	[7:4] reserved [3:0]: y offset2 [11:8]
0x00063c0b	Y_OFFSET2	8'h00	RW	[7:0]: y offset2 [7:0]
0x00063c0c	WIDTH2	8'h14	RW	[7:5] reserved [4:0]: width2 [12:8]
0x00063c0d	WIDTH2	8'h30	RW	[7:0]: width2 [7:0]
0x00063c0e	HEIGHT2	8'h0f	RW	[7:4] reserved [3:0]: height2 [11:8]
0x00063c0f	HEIGHT2	8'h20	RW	[7:0]: height2 [7:0]
0x00063c10	LINE_LENGTH	8'h14	RW	[7:5] reserved [4:0]: line length [12:8]
0x00063c11	LINE_LENGTH	8'h30	RW	[7:0]: line length [7:0]
0x00063c12	CTRL1	8'h01	RW	[7]: pack_en, 4 data out at one to MAC [6]: dvp_in_en, dvp input enable

PRELIMINARY CONFIDENTIAL

Address	Register name	Default value	R/W	Descriptions
				[5]: half_3d, first half and second half line for 3D [4]: lane8_en, 8 lane input support enable [3:0]: data_type 0x0c: RGB888 0x08: RGB565 0x04: YUV422 0x03: RAW14 0x02: RAW12 0x01: RAW10 0x00: RAW8
0x00063c13	CTRL2	8'h22	RW	[7]: lane8_mp2, MIPI2 data output first in 8lane support [6]: no_crop in IDI [5:4]: valid divider [3]: error flag clear [2:0]: sync_thre
0x00063c14	MEM_THRE	8'h01	RW	men_thre
0x00063c15	MEM_OUTPUT_NUM	8'h53	RW	[7:4]: mem output valid high number [3:0]: mem output valid low number
0x00063c16	8LANE_CTRL	8'h00	RW	[7:4] reserved [3:2] valid divider 2 [1]: lane8_opt, 8 lane support, another lane 8 input method support (also for 3D capture) [0]: fast 3D capture enable (use 8 lane, bypass ISP)
0x00063c17 ~ 0x00063c1f				reserved
0x00063c20	ERR_STATUS		RO	[7:0] error status
0x00063c21	ERR_FIFO		RO	[7:0] error fifo
0x00063c22	PCNT_CROP_1		RO	[7:5] reserved [4:0] pcnt_crop_1[12:8]
0x00063c23	PCNT_CROP_1		RO	[7:0] pcnt_crop_1[7:0]
0x00063c24	LCNT_CROP_1		RO	[7:5] reserved [4:0] lcnt_crop_1[12:8]
0x00063c25	LCNT_CROP_1		RO	[7:0] lcnt_crop_1[7:0]

PRELIMINARY CONFIDENTIAL

Address	Register name	Default value	R/W	Descriptions
0x00063c26	PCNT_CROP_2		RO	[7:5] reserved [4:0] pcnt_crop_2[12:8]
0x00063c27	PCNT_CROP_2		RO	[7:0] pcnt_crop_2[7:0]
0x00063c28	LCNT_CROP_2		RO	[7:5] reserved [4:0] lcnt_crop_2[12:8]
0x00063c29	LCNT_CROP_2		RO	[7:0] lcnt_crop_2[7:0]
0x00063c2a	SCLK_HREF_LOW1		RO	[7:0] sclk_href_low1
0x00063c2b	SCLK_HREF_LOW2		RO	[7:0] sclk_href_low2
0x00063c2c	MEM_WADDR1		RO	[7:3] reserved [2:0] mem_waddr1[10:8]
0x00063c2s	MEM_WADDR1		RO	[7:0] mem_waddr1[7:0]
0x00063c2e	MEM_WADDR2		RO	[7:3] reserved [2:0] mem_waddr2[10:8]
0x00063c2f	MEM_WADDR2		RO	[7:0] mem_waddr2[7:0]
0x00063c30	PRE1_PX_CNT		RO	[7:3] reserved [2:0] pre1_px_cnt[10:8]
0x00063c31	PRE1_PX_CNT		RO	[7:0] pre1_px_cnt[7:0]
0x00063c32	PRE1_LN_CNT		RO	[7:4] reserved [3:0] pre1_ln_cnt[11:8]
0x00063c33	PRE1_LN_CNT		RO	[7:0] pre1_ln_cnt[7:0]
0x00063c34	PRE2_PX_CNT		RO	[7:3] reserved [2:0] pre2_px_cnt[10:8]
0x00063c35	PRE2_PX_CNT		RO	[7:0] pre2_px_cnt[7:0]
0x00063c36	PRE2_LN_CNT		RO	[7:4] reserved [3:0] pre2_ln_cnt[11:8]
0x00063c37	PRE2_LN_CNT		RO	[7:0] pre2_ln_cnt[7:0]

PRELIMINARY CONFIDENTIAL

6.45 MCU Control Register

Address	Register name	Default value	R/W	Descriptions

Address	Register name	Default value	R/W	Descriptions
0x0001c130	nImageWidth	8'h07	RW	input image width from sensor [15:8]
0x0001c131	nImageWidth	8'h80	RW	input image width from sensor [7:0]
0x0001c132	nImageHeight	8'h07	RW	input image height from sensor [15:8]
0x0001c133	nImageHeigh	8'h80	RW	input image height from sensor [7:0]
0x0001c134	nOutputWidth	8'h05	RW	output image width to display [15:8]
0x0001c135	nOutputWidth	8'h00	RW	output image width to display [7:0]
0x0001c136	nOutputHeight	8'h02	RW	output image height to display [15:8]
0x0001c137	nOutputHeight	8'hd0	RW	output image height to display [7:0]
0x0001c138	nSensorProcessFrameNum	8'h02	RW	frame number from writing exposure and gain to getting response for sensor
0x0001c139	bFractalExposureExpressMode	8'h00	RW	fractal exposure express mode 0: 1/16 ~ 15/16 1: pixel number / HTS
0x0001c13a	bNightMode	8'h00	RW	night mode 1: enable 0: disable
0x0001c13b	bOnlyInsertFrameEnable	8'h00	RW	only insert whole frames exposure in night mode 1: enable 0: disable
0x0001c13c	nNightModeStep	8'h0c	RW	
0x0001c13d	bAllowFractalExp	8'h01	RW	allow fractal exposure 1: enable 0: disable
0x0001c13e	bAGCNonLinearModeEnable	8'h00	RW	non-linear camera gain mode 1: enable 0: disable
0x0001c13f	bBandingFilterFlag	8'h00	RW	light source type 0: frequency is zero or very high 1: 60HZ 2: 50HZ
0x0001c140	bBandingFilterEnable	8'h00	RW	banding filter 1: enable 0: disable
0x0001c141	bBandingFilterShortEnable	8'h00	RW	short exposure banding filter 1: enable 0: disable
0x0001c142	bLessThan1BandEnable	8'h01	RW	allow less than one band exposure when banding

PRELIMINARY CONFIDENTIAL

Address	Register name	Default value	R/W	Descriptions
				filter is enabled 1: enable 0: disable
0x0001c143	bLessThan1BandShortEnable	8'h01	RW	allow less than one band exposure for short exposure when banding filter is enabled 1: enable 0: disable
0x0001c144	nLogTargetY	8'h88	RW	average image luminance in log domain [15:8]
0x0001c145	nLogTargetY	8'h00	RW	average image luminance in log domain [7:0]
0x0001c146	pTargetY[0]	8'h40	RW	average image luminance target for raw data
0x0001c147	pTargetY[1]	8'h50	RW	average image luminance target for short exposure raw data
0x0001c148	pSlowRange[0]	8'h20	RW	slow AECAGC adjusting range
0x0001c149	pSlowRange[1]	8'h20	RW	slow AECAGC adjusting range for short exposure
0x0001c14a	pStableRange[0]	8'h04	RW	AECAGC range from unstable to stable
0x0001c14b	pStableRange[1]	8'h08	RW	AECAGC range from stable to unstable
0x0001c14c	pFastStep[0]	8'h0a	RW	AECAGC fast adjustment step
0x0001c14d	pFastStep[1]	8'h0a	RW	AECAGC fast adjustment step for short exposure
0x0001c14e	pSlowStep[[0]	8'h08	RW	AECAGC slow adjustment step
0x0001c14f	pSlowStep[[1]	8'h08	RW	AECAGC slow adjustment step for short exposure
0x0001c150	pMaxCameraGain[0]	8'h00	RW	max AECAGC gain [15:8]
0x0001c151	pMaxCameraGain[0]	8'hff	RW	max AECAGC gain [7:0]
0x0001c152	pMaxCameraGain[1]	8'h00	RW	max AECAGC gain for short exposure [15:8]
0x0001c153	pMaxCameraGain[1]	8'hff	RW	max AECAGC gain for short exposure [7:0]
0x0001c154	pMinCameraGain[0]	8'h00	RW	min AECAGC gain [15:8]
0x0001c155	pMinCameraGain[0]	8'h10	RW	min AECAGC gain [7:0]
0x0001c156	pMinCameraGain[1]	8'h00	RW	min AECAGC gain for short exposure [15:8]
0x0001c157	pMinCameraGain[1]	8'h10	RW	min AECAGC gain for short exposure [7:0]
0x0001c158	pMaxExposure[0]	8'h34	RW	max exposure [15:8]
0x0001c159	pMaxExposure[0]	8'h00	RW	max exposure [7:0]

PRELIMINARY CONFIDENTIAL

Address	Register name	Default value	R/W	Descriptions
0x0001c15a	pMaxExposure[1]	8'h34	RW	max exposure for short exposure [15:8]
0x0001c15b	pMaxExposure[1]	8'h00	RW	max exposure for short exposure [7:0]
0x0001c15c	pMinExposure[0]	8'h00	RW	min exposure [15:8]
0x0001c15d	pMinExposure[0]	8'h04	RW	min exposure [7:0]
0x0001c15e	pMinExposure[1]	8'h00	RW	min exposure for short exposure [15:8]
0x0001c15f	pMinExposure[1]	8'h04	RW	min exposure for short exposure [7:0]
0x0001c160	nMaxLightExpShort	8'h01	RW	[31:24]
0x0001c161	nMaxLightExpShort	8'h00	RW	[23:16]
0x0001c162	nMaxLightExpShort	8'h00	RW	[15:8]
0x0001c163	nMaxLightExpShort	8'h00	RW	[7:0]
0x0001c164	nBandValue60Hz	8'h01	RW	banding filter value for 60Hz light source [15:8]
0x0001c165	nBandValue60Hz	8'h0c	RW	banding filter value for 60Hz light source [7:0]
0x0001c166	nBandValue50Hz	8'h20	RW	banding filter value for 50Hz light source [15:8]
0x0001c167	nBandValue50Hz	8'h08	RW	banding filter value for 50Hz light source [7:0]
0x0001c168	nLinearExp	8'h00	RW	[15:8]
0x0001c169	nLinearExp	8'h80	RW	[7:0]
0x0001c16a	nMaxFractalExp	8'h0b	RW	max fractal exposure
0x0001c16b	nMinFractalExp	8'h04	RW	min fractal exposure
0x0001c16c	pAECManualExp[0]	8'h01	RW	manual exposure value [15:8]
0x0001c16d	pAECManualExp[0]	8'h08	RW	manual exposure value [7:0]
0x0001c16e	pAECManualExp[1]	8'h01	RW	manual exposure value for short exposure [15:8]
0x0001c16f	pAECManualExp[1]	8'h08	RW	manual exposure value for short exposure [7:0]
0x0001c170	pAECManualGain[0]	8'h00	RW	manual AECAGC gain value [15:8]
0x0001c171	pAECManualGain[0]	8'h10	RW	manual AECAGC gain value [7:0]
0x0001c172	pAECManualGain[1]	8'h00	RW	manual AECAGC gain value for short exposure [15:8]
0x0001c173	pAECManualGain[1]	8'h10	RW	manual AECAGC gain value for short exposure [7:0]

PRELIMINARY CONFIDENTIAL

Address	Register name	Default value	R/W	Descriptions
0x0001c174	bAECManualEnable	8'h00	RW	manual AECAGC mode 1: enable 0: disable
0x0001c175	nAECManualDone	8'h02	RW	manual AECAGC done
0x0001c176	nVTS	8'h03	RW	image sensor VTS [15:8]
0x0001c177	nVTS	8'h48	RW	image sensor VTS [7:0]
0x0001c178	nPreChargeWidth	8'h08	RW	pre charge width
0x0001c179	nAdditonalExpo	8'h00	RW	additional exposure
0x0001c17a	nAECExposureShift	8'h00	RW	shift bit for sensor exposure
0x0001c17b	reserved	8'h00	RW	
0x0001c17c	nAWBMethodType	8'h01	RW	color temperature based AWB mode 1: CT based AWB 0: simple AWB
0x0001c17d	nAWBWorkMode	8'h01	RW	0: separate 1: long 2:short 3: combine
0x0001c17e	bFeedBackEnable	8'h00	RW	Feedback mode enable 0:disabled 1:enable
0x0001c17f	bShadowCorrectEnable	8'h00	RW	0: disabled 1:enable
0x0001c180	nSimpleMinNum	8'h10	RW	min statistic pixel number needed to trigger simple AWB [15:8]
0x0001c181	nSimpleMinNum	8'h00	RW	min statistic pixel number needed to trigger simple AWB [7:0]
0x0001c182	nCTBasedMinNum	8'h20	RW	min statistic pixel number needed to trigger CT based AWB [15:8]
0x0001c183	nCTBasedMinNum	8'h00	RW	min statistic pixel number needed to trigger CT based AWB [7:0]
0x0001c184	nAWBStep1	8'h01	RW	AWB gain change relative step
0x0001c185	nAWBStep2	8'h80	RW	AWB gain change limitation
0x0001c186	nAWBCombineAlpha	8'h08	RW	
0x0001c187	nSlowAdjustStep	8'h04	RW	
0x0001c188	nGammaOffsetMin	8'h03	RW	[15:8]
0x0001c189	nGammaOffsetMin	8'h99	RW	[7:0]
0x0001c18a	nGammaOffsetMax	8'h04	RW	[15:8]

PRELIMINARY CONFIDENTIAL

Address	Register name	Default value	R/W	Descriptions
0x0001c18b	nGammaOffsetMax	8'h66	RW	[7:0]
0x0001c18c	pUVMatrix[0][0]	8'h22	RW	
0x0001c18d	pUVMatrix[0][1]	8'h0b	RW	
0x0001c18e	pUVMatrix[1][0]	8'h06	RW	
0x0001c18f	pUVMatrix[1][1]	8'h22	RW	
0x0001c190	nAWBStableRange1	8'h10	RW	
0x0001c191	nAWBStableRange2	8'h20	RW	
0x0001c192	nShadowOffsetStep	8'h80	RW	
0x0001c193	nShadowOffsetStableRange	8'h04	RW	
0x0001c194	nMaxAWBGain	8'h03	RW	max AWB gain [15:8]
0x0001c195	nMaxAWBGain	8'h00	RW	max AWB gain [7:0]
0x0001c196	bAWBFixedLSRatioEnable	8'h01	RW	Fixed ratio between long exposure and short exposure AWB gains
0x0001c197	bFixedLSRatioCTBasedEnable	8'h00	RW	
0x0001c198	pAWBFixedLSRatioThre[0]	8'h01	RW	
0x0001c199	pAWBFixedLSRatioThre[0]	8'h00	RW	
0x0001c19a	pAWBFixedLSRatioThre[1]	8'h02	RW	
0x0001c19b	pAWBFixedLSRatioThre[1]	8'h00	RW	
0x0001c19c	pAWBFixedLSRatioThre[2]	8'h03	RW	
0x0001c19d	pAWBFixedLSRatioThre[2]	8'h00	RW	
0x0001c19e	pAWBFixedLSRatioThre[3]	8'h04	RW	
0x0001c19f	pAWBFixedLSRatioThre[3]	8'h00	RW	
0x0001c1a0	pAWBFixedLSRatio[0][0]	8'h70	RW	
0x0001c1a1	pAWBFixedLSRatio[0][1]	8'h78	RW	
0x0001c1a2	pAWBFixedLSRatio[0][2]	8'h7c	RW	
0x0001c1a3	pAWBFixedLSRatio[1][0]	8'h88	RW	
0x0001c1a4	pAWBFixedLSRatio[1][1]	8'h90	RW	

PRELIMINARY CONFIDENTIAL

Address	Register name	Default value	R/W	Descriptions
0x0001c1a5	pAWBFixedLSRatio[1][2]	8'h98	RW	
0x0001c1a6	reserved	8'h00	RW	
0x0001c1a7	reserved	8'h00	RW	
0x0001c1a8	pColorTemperature[0]	8'h00	RW	color temperature for long
0x0001c1a9	pColorTemperature[1]	8'h01	RW	color temperature for short
0x0001c1aa	bAvgAllEnalbe	8'h01	RW	average all enable
0x0001c1ab	bLongExpControlEnable	8'h01	RW	long exposure control enable
0x0001c1ac	bCurveAWBFixedGainEnable	8'h01	RW	curveAWBFixedGainEnable
0x0001c1ad	bCurveAWBShiftEnable	8'h01	RW	curveAWBAShiftEnable
0x0001c1ae	nCurveAWBMinNum	8'h02	RW	nCurveAWBMinNum [15:8]
0x0001c1af	nCurveAWBMinNum	8'h00	RW	nCurveAWBMinNum [7:0]
0x0001c1b0	nCurveAWBFixedGain[0]	8'h04	RW	pCurveAWBFixedGain[0] [15:8]
0x0001c1b1	nCurveAWBFixedGain[0]	8'h00	RW	pCurveAWBFixedGain[0] [7:0]
0x0001c1b2	nCurveAWBFixedGain[1]	8'h04	RW	pCurveAWBFixedGain[1] [15:8]
0x0001c1b3	nCurveAWBFixedGain[1]	8'h00	RW	pCurveAWBFixedGain[1] [7:0]
0x0001c1b4	nCurveAWBXScale	8'h00	RW	[15:8]
0x0001c1b5	nCurveAWBXScale	8'h68	RW	[7:0]
0x0001c1b6	nCurveAWBYScale	8'h00	RW	[15:8]
0x0001c1b7	nCurveAWBYScale	8'h68	RW	[7:0]
0x0001c1b8	nCurveAWBXScaleAdjust	8'h00	RW	[15:8]
0x0001c1b9	nCurveAWBXScaleAdjust	8'h10	RW	[7:0]
0x0001c1ba	nCurveAWBYScaleAdjust	8'h00	RW	[15:8]
0x0001c1bb	nCurveAWBYScaleAdjust	8'h10	RW	[7:0]
0x0001c1bc	nCurveAWBAShiftXTopThre	8'h00	RW	[15:8]
0x0001c1bd	nCurveAWBAShiftXTopThre	8'h02	RW	[7:0]
0x0001c1be	nCurveAWBAShiftXBottomThre	8'h00	RW	[15:8]
0x0001c1bf	nCurveAWBAShiftXBottomThre	8'h06	RW	[7:0]

PRELIMINARY CONFIDENTIAL

Address	Register name	Default value	R/W	Descriptions
0x0001c1c0	nCurveAWBAShiftYTopThre	8'h00	RW	[15:8]
0x0001c1c1	nCurveAWBAShiftYTopThre	8'h12	RW	[7:0]
0x0001c1c2	nCurveAWBAShiftYBottomThre	8'h00	RW	[15:8]
0x0001c1c3	nCurveAWBAShiftYBottomThre	8'h14	RW	[7:0]
0x0001c1c4	bCCMAutoCTEnable	8'h01	RW	color correction matrix changes with color temperature automatically 1: enable 0: disable
0x0001c1c5	reserved	8'h00	RW	
0x0001c1c6	reserved	8'h00	RW	
0x0001c1c7	reserved	8'h00	RW	
0x0001c1c8	pCCMCenterCT[0]	8'h00	RW	[15:8]
0x0001c1c9	pCCMCenterCT[0]	8'hc0	RW	[7:0]
0x0001c1ca	pCCMCenterCT[1]	8'h00	RW	[15:8]
0x0001c1cb	pCCMCenterCT[1]	8'hc0	RW	[7:0]
0x0001c1cc	pCCMLeftCT[0]	8'h00	RW	[15:8]
0x0001c1cd	pCCMLeftCT[0]	8'h40	RW	[7:0]
0x0001c1ce	pCCMLeftCT[1]	8'h00	RW	[15:8]
0x0001c1cf	pCCMLeftCT[1]	8'h40	RW	[7:0]
0x0001c1d0	pCCMRightCT[0]	8'h00	RW	[15:8]
0x0001c1d1	pCCMRightCT[0]	8'he0	RW	[7:0]
0x0001c1d2	pCCMRightCT[1]	8'h00	RW	[15:8]
0x0001c1d3	pCCMRightCT[1]	8'he0	RW	[7:0]
0x0001c1d4	pCCMManulCT[0]	8'h00	RW	[15:8]
0x0001c1d5	pCCMManulCT [0]	8'hc0	RW	[7:0]
0x0001c1d6	pCCMManulCT [1]	8'h00	RW	[15:8]
0x0001c1d7	pCCMManulCT [1]	8'hc0	RW	[7:0]
0x0001c1d8	pCCMCenterMatrix[0][0][0]	8'h01	RW	[15:8]
0x0001c1d9	pCCMCenterMatrix[0][0][0]	8'h00	RW	[7:0]

PRELIMINARY CONFIDENTIAL

Address	Register name	Default value	R/W	Descriptions
0x0001c1da	pCCMCenterMatrix[0][0][1]	8'h00	RW	[15:8]
0x0001c1db	pCCMCenterMatrix[0][0][1]	8'h00	RW	[7:0]
0x0001c1dc	pCCMCenterMatrix[0][0][2]	8'h00	RW	[15:8]
0x0001c1dd	pCCMCenterMatrix[0][0][2]	8'h00	RW	[7:0]
0x0001c1de	pCCMCenterMatrix[0][1][0]	8'h00	RW	[15:8]
0x0001c1df	pCCMCenterMatrix[0][1][0]	8'h00	RW	[7:0]
0x0001c1e0	pCCMCenterMatrix[0][1][1]	8'h01	RW	[15:8]
0x0001c1e1	pCCMCenterMatrix[0][1][1]	8'h00	RW	[7:0]
0x0001c1e2	pCCMCenterMatrix[0][1][2]	8'h00	RW	[15:8]
0x0001c1e3	pCCMCenterMatrix[0][1][2]	8'h00	RW	[7:0]
0x0001c1e4	pCCMCenterMatrix[0][2][0]	8'h00	RW	[15:8]
0x0001c1e5	pCCMCenterMatrix[0][2][0]	8'h00	RW	[7:0]
0x0001c1e6	pCCMCenterMatrix[0][2][1]	8'h00	RW	[15:8]
0x0001c1e7	pCCMCenterMatrix[0][2][1]	8'h00	RW	[7:0]
0x0001c1e8	pCCMCenterMatrix[0][2][2]	8'h01	RW	[15:8]
0x0001c1e9	pCCMCenterMatrix[0][2][2]	8'h00	RW	[7:0]
0x0001c1ea	pCCMCenterMatrix[1][0][0]	8'h01	RW	[15:8]
0x0001c1eb	pCCMCenterMatrix[1][0][0]	8'h00	RW	[7:0]
0x0001c1ec	pCCMCenterMatrix[1][0][1]	8'h00	RW	[15:8]
0x0001c1ed	pCCMCenterMatrix[1][0][1]	8'h00	RW	[7:0]
0x0001c1ee	pCCMCenterMatrix[1][0][2]	8'h00	RW	[15:8]
0x0001c1ef	pCCMCenterMatrix[1][0][2]	8'h00	RW	[7:0]
0x0001c1f0	pCCMCenterMatrix[1][1][0]	8'h00	RW	[15:8]
0x0001c1f1	pCCMCenterMatrix[1][1][0]	8'h00	RW	[7:0]
0x0001c1f2	pCCMCenterMatrix[1][1][1]	8'h01	RW	[15:8]
0x0001c1f3	pCCMCenterMatrix[1][1][1]	8'h00	RW	[7:0]
0x0001c1f4	pCCMCenterMatrix[1][1][2]	8'h00	RW	[15:8]

PRELIMINARY CONFIDENTIAL

Address	Register name	Default value	R/W	Descriptions
0x0001c1f5	pCCMCenterMatrix[1][1][2]	8'h00	RW	[7:0]
0x0001c1f6	pCCMCenterMatrix[1][2][0]	8'h00	RW	[15:8]
0x0001c1f7	pCCMCenterMatrix[1][2][0]	8'h00	RW	[7:0]
0x0001c1f8	pCCMCenterMatrix[1][2][1]	8'h00	RW	[15:8]
0x0001c1f9	pCCMCenterMatrix[1][2][1]	8'h00	RW	[7:0]
0x0001c1fa	pCCMCenterMatrix[1][2][2]	8'h01	RW	[15:8]
0x0001c1fb	pCCMCenterMatrix[1][2][2]	8'h00	RW	[7:0]
0x0001c1fc	pCCMLeftDeltaMatrix[0][0][0]	8'h00	RW	[15:8]
0x0001c1fd	pCCMLeftDeltaMatrix[0][0][0]	8'h00	RW	[7:0]
0x0001c1fe	pCCMLeftDeltaMatrix[0][0][1]	8'h00	RW	[15:8]
0x0001c1ff	pCCMLeftDeltaMatrix[0][0][1]	8'h00	RW	[7:0]
0x0001c200	pCCMLeftDeltaMatrix[0][0][2]	8'h00	RW	[15:8]
0x0001c201	pCCMLeftDeltaMatrix[0][0][2]	8'h00	RW	[7:0]
0x0001c202	pCCMLeftDeltaMatrix[0][1][0]	8'h00	RW	[15:8]
0x0001c203	pCCMLeftDeltaMatrix[0][1][0]	8'h00	RW	[7:0]
0x0001c204	pCCMLeftDeltaMatrix[0][1][1]	8'h00	RW	[15:8]
0x0001c205	pCCMLeftDeltaMatrix[0][1][1]	8'h00	RW	[7:0]
0x0001c206	pCCMLeftDeltaMatrix[0][1][2]	8'h00	RW	[15:8]
0x0001c207	pCCMLeftDeltaMatrix[0][1][2]	8'h00	RW	[7:0]
0x0001c208	pCCMLeftDeltaMatrix[0][2][0]	8'h00	RW	[15:8]
0x0001c209	pCCMLeftDeltaMatrix[0][2][0]	8'h00	RW	[7:0]
0x0001c20a	pCCMLeftDeltaMatrix[0][2][1]	8'h00	RW	[15:8]
0x0001c20b	pCCMLeftDeltaMatrix[0][2][1]	8'h00	RW	[7:0]
0x0001c20c	pCCMLeftDeltaMatrix[0][2][2]	8'h00	RW	[15:8]
0x0001c20d	pCCMLeftDeltaMatrix[0][2][2]	8'h00	RW	[7:0]
0x0001c20e	pCCMLeftDeltaMatrix[1][0][0]	8'h00	RW	[15:8]
0x0001c20f	pCCMLeftDeltaMatrix[1][0][0]	8'h00	RW	[7:0]

PRELIMINARY CONFIDENTIAL

Address	Register name	Default value	R/W	Descriptions
0x0001c210	pCCMLeftDeltaMatrix[1][0][1]	8'h00	RW	[15:8]
0x0001c211	pCCMLeftDeltaMatrix[1][0][1]	8'h00	RW	[7:0]
0x0001c212	pCCMLeftDeltaMatrix[1][0][2]	8'h00	RW	[15:8]
0x0001c213	pCCMLeftDeltaMatrix[1][0][2]	8'h00	RW	[7:0]
0x0001c214	pCCMLeftDeltaMatrix[1][1][0]	8'h00	RW	[15:8]
0x0001c215	pCCMLeftDeltaMatrix[1][1][0]	8'h00	RW	[7:0]
0x0001c216	pCCMLeftDeltaMatrix[1][1][1]	8'h00	RW	[15:8]
0x0001c217	pCCMLeftDeltaMatrix[1][1][1]	8'h00	RW	[7:0]
0x0001c218	pCCMLeftDeltaMatrix[1][1][2]	8'h00	RW	[15:8]
0x0001c219	pCCMLeftDeltaMatrix[1][1][2]	8'h00	RW	[7:0]
0x0001c21a	pCCMLeftDeltaMatrix[1][2][0]	8'h00	RW	[15:8]
0x0001c21b	pCCMLeftDeltaMatrix[1][2][0]	8'h00	RW	[7:0]
0x0001c21c	pCCMLeftDeltaMatrix[1][2][1]	8'h00	RW	[15:8]
0x0001c21d	pCCMLeftDeltaMatrix[1][2][1]	8'h00	RW	[7:0]
0x0001c21e	pCCMLeftDeltaMatrix[1][2][2]	8'h00	RW	[15:8]
0x0001c21f	pCCMLeftDeltaMatrix[1][2][2]	8'h00	RW	[7:0]
0x0001c220	pCCMRightDeltaMatrix[0][0][0]	8'h00	RW	[15:8]
0x0001c221	pCCMRightDeltaMatrix[0][0][0]	8'h00	RW	[7:0]
0x0001c222	pCCMRightDeltaMatrix[0][0][1]	8'h00	RW	[15:8]
0x0001c223	pCCMRightDeltaMatrix[0][0][1]	8'h00	RW	[7:0]
0x0001c224	pCCMRightDeltaMatrix[0][0][2]	8'h00	RW	[15:8]
0x0001c225	pCCMRightDeltaMatrix[0][0][2]	8'h00	RW	[7:0]
0x0001c226	pCCMRightDeltaMatrix[0][1][0]	8'h00	RW	[15:8]
0x0001c227	pCCMRightDeltaMatrix[0][1][0]	8'h00	RW	[7:0]
0x0001c228	pCCMRightDeltaMatrix[0][1][1]	8'h00	RW	[15:8]
0x0001c229	pCCMRightDeltaMatrix[0][1][1]	8'h00	RW	[7:0]
0x0001c22a	pCCMRightDeltaMatrix[0][1][2]	8'h00	RW	[15:8]

PRELIMINARY CONFIDENTIAL

Address	Register name	Default value	R/W	Descriptions
0x0001c22b	pCCMRightDeltaMatrix[0][1][2]	8'h00	RW	[7:0]
0x0001c22c	pCCMRightDeltaMatrix[0][2][0]	8'h00	RW	[15:8]
0x0001c22d	pCCMRightDeltaMatrix[0][2][0]	8'h00	RW	[7:0]
0x0001c22e	pCCMRightDeltaMatrix[0][2][1]	8'h00	RW	[15:8]
0x0001c22f	pCCMRightDeltaMatrix[0][2][1]	8'h00	RW	[7:0]
0x0001c230	pCCMRightDeltaMatrix[0][2][2]	8'h00	RW	[15:8]
0x0001c231	pCCMRightDeltaMatrix[0][2][2]	8'h00	RW	[7:0]
0x0001c232	pCCMRightDeltaMatrix[1][0][0]	8'h00	RW	[15:8]
0x0001c233	pCCMRightDeltaMatrix[1][0][0]	8'h00	RW	[7:0]
0x0001c234	pCCMRightDeltaMatrix[1][0][1]	8'h00	RW	[15:8]
0x0001c235	pCCMRightDeltaMatrix[1][0][1]	8'h00	RW	[7:0]
0x0001c236	pCCMRightDeltaMatrix[1][0][2]	8'h00	RW	[15:8]
0x0001c237	pCCMRightDeltaMatrix[1][0][2]	8'h00	RW	[7:0]
0x0001c238	pCCMRightDeltaMatrix[1][1][0]	8'h00	RW	[15:8]
0x0001c239	pCCMRightDeltaMatrix[1][1][0]	8'h00	RW	[7:0]
0x0001c23a	pCCMRightDeltaMatrix[1][1][1]	8'h00	RW	[15:8]
0x0001c23b	pCCMRightDeltaMatrix[1][1][1]	8'h00	RW	[7:0]
0x0001c23c	pCCMRightDeltaMatrix[1][1][2]	8'h00	RW	[15:8]
0x0001c23d	pCCMRightDeltaMatrix[1][1][2]	8'h00	RW	[7:0]
0x0001c23e	pCCMRightDeltaMatrix[1][2][0]	8'h00	RW	[15:8]
0x0001c23f	pCCMRightDeltaMatrix[1][2][0]	8'h00	RW	[7:0]
0x0001c240	pCCMRightDeltaMatrix[1][2][1]	8'h00	RW	[15:8]
0x0001c241	pCCMRightDeltaMatrix[1][2][1]	8'h00	RW	[7:0]
0x0001c242	pCCMRightDeltaMatrix[1][2][2]	8'h00	RW	[15:8]
0x0001c243	pCCMRightDeltaMatrix[1][2][2]	8'h00	RW	[7:0]
0x0001c244	nASBlockSize		RW	anti-shake block size [15:8]
0x0001c245	nASBlockSize		RW	anti-shake block size [7:0]

PRELIMINARY CONFIDENTIAL

Address	Register name	Default value	R/W	Descriptions
0x0001c246	bLensAutoGainEnable	8'h01	RW	lens shading correction gain changes with camera gain 1: enable 0: disable
0x0001c247	bLensAutoCTEnable	8'h01	RW	color temperature based lens shading correction mode 1: enable 0: disable
0x0001c248	pLensMaxQ[0]		RW	max lens shading correction step
0x0001c249	pLensMaxQ[1]		RW	max lens shading correction step for short exposure (HDR/3D)
0x0001c24a	pLensMinQ[0]		RW	min lens shading correction step
0x0001c24b	pLensMinQ[1]		RW	min lens shading correction step for short exposure (HDR/3D)
0x0001c24c	pLensGain[0]		RW	min gain for lens shading correction parameter calculation [15:8]
0x0001c24d	pLensGain[0]		RW	min gain for lens shading correction parameter calculation [7:0]
0x0001c24e	pLensGain[1]		RW	max gain for lens shading correction parameter calculation [15:8]
0x0001c24f	pLensGain[1]		RW	max gain for lens shading correction parameter calculation [7:0]
0x0001c250	pLensManualCT[0]	8'h01	RW	[15:8]
0x0001c251	pLensManualCT[0]	8'h00	RW	[7:0]
0x0001c252	pLensManualCT[1]	8'h01	RW	[15:8]
0x0001c253	pLensManualCT[1]	8'h00	RW	[7:0]
0x0001c254	pLensCTThre[0][0]		RW	[15:8]
0x0001c255	pLensCTThre[0][0]		RW	[7:0]
0x0001c256	pLensCTThre[0][1]		RW	[15:8]
0x0001c257	pLensCTThre[0][1]		RW	[7:0]
0x0001c258	pLensCTThre[0][2]		RW	[15:8]
0x0001c259	pLensCTThre[0][2]		RW	[7:0]

PRELIMINARY CONFIDENTIAL

Address	Register name	Default value	R/W	Descriptions
0x0001c25a	pLensCTThre[0][3]		RW	[15:8]
0x0001c25b	pLensCTThre[0][3]		RW	[7:0]
0x0001c25c	pLensCTThre[1][0]		RW	[15:8]
0x0001c25d	pLensCTThre[1][0]		RW	[7:0]
0x0001c25e	pLensCTThre[1][1]		RW	[15:8]
0x0001c25f	pLensCTThre[1][1]		RW	[7:0]
0x0001c260	pLensCTThre[1][2]		RW	[15:8]
0x0001c261	pLensCTThre[1][2]		RW	[7:0]
0x0001c262	pLensCTThre[1][3]		RW	[15:8]
0x0001c263	pLensCTThre[1][3]		RW	[7:0]
0x0001c264	pLensCPArray[0][0][0]		RW	lens control points for DAY light
0x0001c265	pLensCPArray[0][0][1]		RW	
0x0001c266	pLensCPArray[0][0][2]		RW	
. . .	. . .			
0x0001c2b9	pLensCPArray[0][0][85]		RW	
0x0001c2ba	pLensCPArray[0][1][0]		RW	lens control points for CWF light
0x0001c2bb	pLensCPArray[0][1][1]		RW	
0x0001c2bc	pLensCPArray[0][1][2]		RW	
. . .	. . .			
0x0001c30f	pLensCPArray[0][1][85]		RW	
0x0001c310	pLensCPArray[0][2][0]		RW	lens control points for A light
0x0001c311	pLensCPArray[0][2][1]		RW	
0x0001c312	pLensCPArray[0][2][2]		RW	
. . .	. . .			
0x0001c365	pLensCPArray[0][2][85]		RW	
0x0001c366	pLensCPArray[1][0][0]		RW	lens control points for DAY light for short exposure (HDR/3D)

PRELIMINARY CONFIDENTIAL

Address	Register name	Default value	R/W	Descriptions
0x0001c367	pLensCPArray[1][0][1]		RW	
0x0001c368	pLensCPArray[1][0][2]		RW	
. . .	. . .			
0x0001c3bb	pLensCPArray[1][0][85]		RW	
0x0001c3bc	pLensCPArray[1][1][0]		RW	lens control points for CWF light for short exposure (HDR/3D)
0x0001c3bd	pLensCPArray[1][1][1]		RW	
0x0001c3be	pLensCPArray[1][1][2]		RW	
. . .	. . .			
0x0001c411	pLensCPArray[1][1][85]		RW	
0x0001c412	pLensCPArray[1][2][0]		RW	lens control points for A light for short exposure (HDR/3D)
0x0001c413	pLensCPArray[1][2][1]		RW	
0x0001c414	pLensCPArray[1][2][2]		RW	
. . .	. . .			
0x0001c467	pLensCPArray[1][2][85]		RW	
0x0001c468	pBLCTarget[0]		RW	black level target [15:8]
0x0001c469	pBLCTarget[0]		RW	black level target [7:0]
0x0001c46a	pBLCTarget[1]		RW	black level target for short exposure [15:8]
0x0001c46b	pBLCTarget[1]		RW	black level target for short exposure [7:0]
0x0001c46c	pCompensatedGain[0]		RW	compensated gain [15:8]
0x0001c46d	pCompensatedGain[0]		RW	compensated gain [7:0]
0x0001c46e	pCompensatedGain[1]		RW	compensated gain for another sensor [15:8]
0x0001c46f	pCompensatedGain[1]		RW	compensated gain for another sensor [7:0]
0x0001c470	nLSSensitivityRatio		RW	sensitivity ratio between long exposure and short exposure [15:8]
0x0001c471	nLSSensitivityRatio		RW	sensitivity ratio between long exposure and short exposure [7:0]

PRELIMINARY CONFIDENTIAL

Address	Register name	Default value	R/W	Descriptions
0x0001c472	bNonHDREnable	8'h00	RW	non-HDR mode 1: enable 0: disable
0x0001c473	nNonHDRStep		RW	
0x0001c474	bFixedRatioEnable	8'h00	RW	fixed ratio between long and short exposures mode 1: enable 0: disable
0x0001c475	bFixedRatio	8'h07	RW	fixed ratio = value+1
0x0001c476	nMaxFastRatio		RW	[15:8]
0x0001c477	nMaxSlowRatio		RW	[7:0]
0x0001c478	nHDRGainStep	8'h04	RW	[15:8]
0x0001c479	nExpRatioStep	8'h20	RW	[7:0]
0x0001c47a	nGammaStep	8'h04	RW	[15:8]
0x0001c47b	nMinSaturateLevel	8'h08	RW	[7:0]
0x0001c47c	pMinGammaList[0]	8'h02	RW	[15:8]
0x0001c47d	pMinGammaList[0]	8'h00	RW	[7:0]
0x0001c47e	pMinGammaList[1]	8'h02	RW	[15:8]
0x0001c47f	pMinGammaList[1]	8'h60	RW	[7:0]
0x0001c480	pMinGammaList[2]	8'h04	RW	[15:8]
0x0001c481	pMinGammaList[2]	8'h00	RW	[7:0]
0x0001c482	pMaxGammaList[0]	8'h02	RW	[15:8]
0x0001c483	pMaxGammaList[0]	8'h60	RW	[7:0]
0x0001c484	pMaxGammaList[1]	8'h05	RW	[15:8]
0x0001c485	pMaxGammaList[1]	8'h00	RW	[7:0]
0x0001c486	pMaxGammaList[2]	8'h06	RW	[15:8]
0x0001c487	pMaxGammaList[2]	8'h00	RW	[7:0]
0x0001c488	pDynamicRangeList[0]	8'h00	RW	[15:8]
0x0001c489	pDynamicRangeList[0]	8'h20	RW	[7:0]
0x0001c48a	pDynamicRangeList[1]	8'h00	RW	[15:8]

PRELIMINARY CONFIDENTIAL

Address	Register name	Default value	R/W	Descriptions
0x0001c48b	pDynamicRangeList[1]	8'h80	RW	[7:0]
0x0001c48c	pDynamicRangeList[2]	8'h01	RW	[15:8]
0x0001c48d	pDynamicRangeList[2]	8'h00	RW	[7:0]
0x0001c48e	nMaxRatio		RW	max ratio between long and short exposures [15:8]
0x0001c48f	nMaxRatio		RW	max ratio between long and short exposures [7:0]
0x0001c490	nMinRatio		RW	min ratio between long and short exposures
0x0001c491	reserved		RW	
0x0001c492	reserved		RW	
0x0001c493	reserved		RW	
0x0001c494	bReduceNoiseInDarkEnable		RW	
0x0001c495	bReduceNoiseMinGain		RW	
0x0001c496	bReduceNoiseMaxGain		RW	
0x0001c497	bReduceNoiseStep		RW	
0x0001c498	bCutBlackLevelEnable	8'h01	RW	
0x0001c499	bDarkBoostAutoSwitchEnable	8'h01	RW	auto switch dark boost function based on camera gain
0x0001c49a	bAutoLowLevelEnable	8'h00	RW	
0x0001c49b	bManualGammaEnable	8'h00	RW	manual gamma mode 1: enable 0: disable
0x0001c49c	nManualGamma		RW	manual gamma value [15:8]
0x0001c49d	nManualGamma		RW	manual gamma value [7:0]
0x0001c49e	nRGBGamma		RW	RGB gamma value [15:8]
0x0001c49f	nRGBGamma		RW	RGB gamma value [7:0]
0x0001c4a0	nMaxCurveGain	8'h00	RW	[15:8]
0x0001c4a1	nMaxCurveGain	8'h40	RW	[7:0]
0x0001c4a2	nMaxRGBGammaGain	8'h00	RW	[15:8]
0x0001c4a3	nMaxRGBGammaGain	8'h40	RW	[7:0]

PRELIMINARY CONFIDENTIAL

Address	Register name	Default value	R/W	Descriptions
0x0001c4a4	nLocalComineNum		RW	local combine point number [31:24]
0x0001c4a5	nLocalComineNum		RW	local combine point number [23:16]
0x0001c4a6	nLocalComineNum		RW	local combine point number [15:8]
0x0001c4a7	nLocalComineNum		RW	local combine point number [7:0]
0x0001c4a8	nDarkBoostGainThre1		RW	dark boost gain threshold 1 [15:8]
0x0001c4a9	nDarkBoostGainThre1		RW	dark boost gain threshold 1 [7:0]
0x0001c4aa	nDarkBoostGainThre2		RW	dark boost gain threshold 2 [15:8]
0x0001c4ab	nDarkBoostGainThre2		RW	dark boost gain threshold 2 [7:0]
0x0001c4ac	nDarkBoostAmount	8'h10	RW	dark boost step
0x0001c4ad	nDarkBoostAmountMin	8'h00	RW	min dark boost step
0x0001c4ae	nDarkBoostAmountMax	8'h10	RW	max dark boost step
0x0001c4af	nHighLightDepressAmount	8'h06	RW	high light depress step
0x0001c4b0	nDarkBoostMaxGamma		RW	max gamma value for dark boost [15:8]
0x0001c4b1	nDarkBoostMaxGamma		RW	max gamma value for dark boost [7:0]
0x0001c4b2	nDarkToneWidth		RW	tone width for dark boost [15:8]
0x0001c4b3	nDarkToneWidth		RW	tone width for dark boost [7:0]
0x0001c4b4	pLBDynamicRangeList[0]		RW	[15:8]
0x0001c4b5	pLBDynamicRangeList[0]		RW	[7:0]
0x0001c4b6	pLBDynamicRangeList[1]		RW	[15:8]
0x0001c4b7	pLBDynamicRangeList[1]		RW	[7:0]
0x0001c4b8	pSaveRange[0]		RW	[15:8]
0x0001c4b9	pSaveRange[0]		RW	[7:0]
0x0001c4ba	pSaveRange[1]		RW	[15:8]
0x0001c4bb	pSaveRange[1]		RW	[7:0]
0x0001c4bc	nHighLightDepressMaxGamma		RW	max gamma value for high light depress [15:8]
0x0001c4bd	nHighLightDepressMaxGamma		RW	max gamma value for high light depress [7:0]
0x0001c4be	nStepE	8'h04	RW	

PRELIMINARY CONFIDENTIAL

Address	Register name	Default value	R/W	Descriptions
0x0001c4bf	nErrorMinNumPer		RW	
0x0001c4c0	pContrastCurve[0]		RW	contrast curve
0x0001c4c1	pContrastCurve[1]		RW	
0x0001c4c2	pContrastCurve[2]		RW	
0x0001c4c3	pContrastCurve[3]		RW	
0x0001c4c4	pContrastCurve[4]		RW	
0x0001c4c5	pContrastCurve[5]		RW	
0x0001c4c6	pContrastCurve[6]		RW	
0x0001c4c7	pContrastCurve[7]		RW	
0x0001c4c8	pContrastCurve[8]		RW	
0x0001c4c9	pContrastCurve[9]		RW	
0x0001c4ca	pContrastCurve[10]		RW	
0x0001c4cb	pContrastCurve[11]		RW	
0x0001c4cc	pContrastCurve[12]		RW	
0x0001c4cd	pContrastCurve[13]		RW	
0x0001c4ce	pContrastCurve[14]		RW	
0x0001c4cf	nCurveStep	8'h80	RW	curve change step
0x0001c4d0	nMinDynamicRange		RW	min dynamic range for contrast curve [15:8]
0x0001c4d1	nMinDynamicRange		RW	min dynamic range for contrast curve [7:0]
0x0001c4d2	nMaxDynamicRange		RW	max dynamic range for contrast curve [15:8]
0x0001c4d3	nMaxDynamicRange		RW	max dynamic range for contrast curve [7:0]
0x0001c4d4	nMinAlpha	8'h04	RW	min curve alpha
0x0001c4d5	nMaxAlpha	8'h0a	RW	max curve alpha
0x0001c4d6	nFWWorkMode		RW	
0x0001c4d7	nIdleWorkMode		RW	
0x0001c4d8	bAntiShakingEnable		RW	anti-shake function 1: enable 0: disable

PRELIMINARY CONFIDENTIAL

Address	Register name	Default value	R/W	Descriptions
0x0001c4d9	nSensorBinningMode		RW	
0x0001c4da	reserved		RW	
0x0001c4db	reserved		RW	
0x0001c4dc	bAutoFlashEnable	8'h01	RW	Auto flash enable 1: enable 0:disable
0x0001c4dd	nFlashType	8'h01	RW	Flash light type 0: no flash light 1: XEON 2: LED
0x0001c4de	nGainThre1	8'hf0	RW	Open flash light gain
0x0001c4df	nGainThre2	8'h80	RW	Close flash light gain
0x0001c4e0	bStrobeOn	8'h00	RW	Flash light status
0x0001c4e1	pStrobeExpRatio	8'h60	RW	
0x0001c4e2	pStrobeManualGain[0]		RW	
0x0001c4e3	pStrobeManualGain[1]		RW	
0x0001c4e4	pStrobeManualExp[0]		RW	[15:8]
0x0001c4e5	pStrobeManualExp[0]		RW	[7:0]
0x0001c4e6	pStrobeManualExp[1]		RW	[15:8]
0x0001c4e7	pStrobeManualExp[1]		RW	[7:0]
0x0001c4e8	bUVSaturateAdjustEnable	8'h00	RW	
0x0001c4e9	bUVSaturateGainThre1	8'h80	RW	
0x0001c4ea	bUVSaturateGainThre2	8'hff	RW	
0x0001c4eb	nUVMaxSaturation	8'h80	RW	
0x0001c4ec	nUVMinSaturation	8'h40	RW	
0x0001c4ed	reserved		RW	
0x0001c4ee	reserved		RW	
0x0001c4ef	reserved		RW	
0x0001c4f0	pManualAWBGain[0][0]		RW	Manual AWB group 1 blue gain [15:8]

PRELIMINARY CONFIDENTIAL

Address	Register name	Default value	R/W	Descriptions
0x0001c4f1	pManualAWBGain[0][0]		RW	Manual AWB group 1 blue gain [7:0]
0x0001c4f2	pManualAWBGain[0][1]		RW	Manual AWB group 1 green gain [15:8]
0x0001c4f3	pManualAWBGain[0][1]		RW	Manual AWB group 1 green gain [7:0]
0x0001c4f4	pManualAWBGain[0][2]		RW	Manual AWB group 1 red gain [15:8]
0x0001c4f5	pManualAWBGain[0][2]		RW	Manual AWB group 1 red gain [7:0]
0x0001c4f6	pManualAWBGain[1][0]		RW	Manual AWB group 2 blue gain [15:8]
0x0001c4f7	pManualAWBGain[1][0]		RW	Manual AWB group 2 blue gain [7:0]
0x0001c4f8	pManualAWBGain[1][1]		RW	Manual AWB group 2 green gain [15:8]
0x0001c4f9	pManualAWBGain[1][1]		RW	Manual AWB group 2 green gain [7:0]
0x0001c4fa	pManualAWBGain[1][2]		RW	Manual AWB group 2 red gain [15:8]
0x0001c4fb	pManualAWBGain[1][2]		RW	Manual AWB group 2 red gain [7:0]
0x0001c4fc	pManualAWBGain[2][0]		RW	Manual AWB group 3 blue gain [15:8]
0x0001c4fd	pManualAWBGain[2][0]		RW	Manual AWB group 3 blue gain [7:0]
0x0001c4fe	pManualAWBGain[2][1]		RW	Manual AWB group 3 green gain [15:8]
0x0001c4ff	pManualAWBGain[2][1]		RW	Manual AWB group 3 green gain [7:0]
0x0001c500	pManualAWBGain[2][2]		RW	Manual AWB group 3 red gain [15:8]
0x0001c501	pManualAWBGain[2][2]		RW	Manual AWB group 3 red gain [7:0]
0x0001c502	pManualAWBGain[3][0]		RW	Manual AWB group 4 blue gain [15:8]
0x0001c503	pManualAWBGain[3][0]		RW	Manual AWB group 4 blue gain [7:0]
0x0001c504	pManualAWBGain[3][1]		RW	Manual AWB group 4 green gain [15:8]
0x0001c505	pManualAWBGain[3][1]		RW	Manual AWB group 4 green gain [7:0]
0x0001c506	pManualAWBGain[3][2]		RW	Manual AWB group 4 red gain [15:8]
0x0001c507	pManualAWBGain[3][2]		RW	Manual AWB group 4 red gain [7:0]
0x0001c508	pManualAWBGain[4][0]		RW	Manual AWB group 5 blue gain [15:8]
0x0001c509	pManualAWBGain[4][0]		RW	Manual AWB group 5 blue gain [7:0]
0x0001c50a	pManualAWBGain[4][1]		RW	Manual AWB group 5 green gain [15:8]
0x0001c50b	pManualAWBGain[4][1]		RW	Manual AWB group 5 green gain [7:0]

PRELIMINARY CONFIDENTIAL

Address	Register name	Default value	R/W	Descriptions
0x0001c50c	pManualAWBGain[4][2]		RW	Manual AWB group 5 red gain [15:8]
0x0001c50d	pManualAWBGain[4][2]		RW	Manual AWB group 5 red gain [7:0]
0x0001c50e	pManualAWBGain[5][0]		RW	Manual AWB group 6 blue gain [15:8]
0x0001c50f	pManualAWBGain[5][0]		RW	Manual AWB group 6 blue gain [7:0]
0x0001c510	pManualAWBGain[5][1]		RW	Manual AWB group 6 green gain [15:8]
0x0001c511	pManualAWBGain[5][1]		RW	Manual AWB group 6 green gain [7:0]
0x0001c512	pManualAWBGain[5][2]		RW	Manual AWB group 6 red gain [15:8]
0x0001c513	pManualAWBGain[5][2]		RW	Manual AWB group 6 red gain [7:0]
0x0001c514	pManualAWBGain[6][0]		RW	Manual AWB group 7 blue gain [15:8]
0x0001c515	pManualAWBGain[6][0]		RW	Manual AWB group 7 blue gain [7:0]
0x0001c516	pManualAWBGain[6][1]		RW	Manual AWB group 7 green gain [15:8]
0x0001c517	pManualAWBGain[6][1]		RW	Manual AWB group 7 green gain [7:0]
0x0001c518	pManualAWBGain[6][2]		RW	Manual AWB group 7 red gain [15:8]
0x0001c519	pManualAWBGain[6][2]		RW	Manual AWB group 7 red gain [7:0]
0x0001c51a	pManualAWBGain[7][0]		RW	Manual AWB group 8 blue gain [15:8]
0x0001c51b	pManualAWBGain[7][0]		RW	Manual AWB group 8 blue gain [7:0]
0x0001c51c	pManualAWBGain[7][1]		RW	Manual AWB group 8 green gain [15:8]
0x0001c51d	pManualAWBGain[7][1]		RW	Manual AWB group 8 green gain [7:0]
0x0001c51e	pManualAWBGain[7][2]		RW	Manual AWB group 8 red gain [15:8]
0x0001c51f	pManualAWBGain[7][2]		RW	Manual AWB group 8 red gain [7:0]
0x0001c520	reserved	8'h00	RW	
0x0001c521	reserved	8'h00	RW	
0x0001c522	reserved	8'h00	RW	
0x0001c523	reserved	8'h00	RW	
0x0001c524	reserved	8'h00	RW	
0x0001c525	reserved	8'h00	RW	
0x0001c526	reserved	8'h00	RW	

PRELIMINARY CONFIDENTIAL

Address	Register name	Default value	R/W	Descriptions
0x0001c527	reserved	8'h00	RW	
0x0001c528	pSensorDeviceID[0]		RW	
0x0001c529	pSensorDeviceID[1]		RW	
0x0001c52a	pSensorI2COption[0]		RW	
0x0001c52b	pSensorI2COption[1]		RW	
0x0001c52c	pSensorAECAddr[0][0]		RW	[15:8]
0x0001c52d	pSensorAECAddr[0][0]		RW	[7:0]
0x0001c52e	pSensorAECAddr[0][1]		RW	[15:8]
0x0001c52f	pSensorAECAddr[0][1]		RW	[7:0]
0x0001c530	pSensorAECAddr[0][2]		RW	[15:8]
0x0001c531	pSensorAECAddr[0][2]		RW	[7:0]
0x0001c532	pSensorAECAddr[0][3]		RW	[15:8]
0x0001c533	pSensorAECAddr[0][3]		RW	[7:0]
0x0001c534	pSensorAECAddr[0][4]		RW	[15:8]
0x0001c535	pSensorAECAddr[0][4]		RW	[7:0]
0x0001c536	pSensorAECAddr[0][5]		RW	[15:8]
0x0001c537	pSensorAECAddr[0][5]		RW	[7:0]
0x0001c538	pSensorAECAddr[0][6]		RW	[15:8]
0x0001c539	pSensorAECAddr[0][6]		RW	[7:0]
0x0001c53a	pSensorAECAddr[0][7]		RW	[15:8]
0x0001c53b	pSensorAECAddr[0][7]		RW	[7:0]
0x0001c53c	pSensorAECAddr[0][8]		RW	[15:8]
0x0001c53d	pSensorAECAddr[0][8]		RW	[7:0]
0x0001c53e	pSensorAECAddr[0][9]		RW	[15:8]
0x0001c53f	pSensorAECAddr[0][9]		RW	[7:0]
0x0001c540	pSensorAECAddr[0][10]		RW	[15:8]
0x0001c541	pSensorAECAddr[0][10]		RW	[7:0]

PRELIMINARY CONFIDENTIAL

Address	Register name	Default value	R/W	Descriptions
0x0001c542	pSensorAECAddr[0][11]		RW	[15:8]
0x0001c543	pSensorAECAddr[0][11]		RW	[7:0]
0x0001c544	pSensorAECAddr[1][0]		RW	[15:8]
0x0001c545	pSensorAECAddr[1][0]		RW	[7:0]
0x0001c546	pSensorAECAddr[1][1]		RW	[15:8]
0x0001c547	pSensorAECAddr[1][1]		RW	[7:0]
0x0001c548	pSensorAECAddr[1][2]		RW	[15:8]
0x0001c549	pSensorAECAddr[1][2]		RW	[7:0]
0x0001c54a	pSensorAECAddr[1][3]		RW	[15:8]
0x0001c54b	pSensorAECAddr[1][3]		RW	[7:0]
0x0001c54c	pSensorAECAddr[1][4]		RW	[15:8]
0x0001c54d	pSensorAECAddr[1][4]		RW	[7:0]
0x0001c54e	pSensorAECAddr[1][5]		RW	[15:8]
0x0001c54f	pSensorAECAddr[1][5]		RW	[7:0]
0x0001c550	pSensorAECAddr[1][6]		RW	[15:8]
0x0001c551	pSensorAECAddr[1][6]		RW	[7:0]
0x0001c552	pSensorAECAddr[1][7]		RW	[15:8]
0x0001c553	pSensorAECAddr[1][7]		RW	[7:0]
0x0001c554	pSensorAECAddr[1][8]		RW	[15:8]
0x0001c555	pSensorAECAddr[1][8]		RW	[7:0]
0x0001c556	pSensorAECAddr[1][9]		RW	[15:8]
0x0001c557	pSensorAECAddr[1][9]		RW	[7:0]
0x0001c558	pSensorAECAddr[1][10]		RW	[15:8]
0x0001c559	pSensorAECAddr[1][10]		RW	[7:0]
0x0001c55a	pSensorAECAddr[1][11]		RW	[15:8]
0x0001c55b	pSensorAECAddr[1][11]		RW	[7:0]
0x0001c55c	pSensorAECMask[0][0]		RW	

PRELIMINARY CONFIDENTIAL

Address	Register name	Default value	R/W	Descriptions
0x0001c55d	pSensorAECMask[0][1]		RW	
0x0001c55e	pSensorAECMask[0][2]		RW	
0x0001c55f	pSensorAECMask[0][3]		RW	
0x0001c560	pSensorAECMask[0][4]		RW	
0x0001c561	pSensorAECMask[0][5]		RW	
0x0001c562	pSensorAECMask[0][6]		RW	
0x0001c563	pSensorAECMask[0][7]		RW	
0x0001c564	pSensorAECMask[0][8]		RW	
0x0001c565	pSensorAECMask[0][9]		RW	
0x0001c566	pSensorAECMask[0][10]		RW	
0x0001c567	pSensorAECMask[0][11]		RW	
0x0001c568	pSensorAECMask[1][0]		RW	
0x0001c569	pSensorAECMask[1][1]		RW	
0x0001c56a	pSensorAECMask[1][2]		RW	
0x0001c56b	pSensorAECMask[1][3]		RW	
0x0001c56c	pSensorAECMask[1][4]		RW	
0x0001c56d	pSensorAECMask[1][5]		RW	
0x0001c56e	pSensorAECMask[1][6]		RW	
0x0001c56f	pSensorAECMask[1][7]		RW	
0x0001c570	pSensorAECMask[1][8]		RW	
0x0001c571	pSensorAECMask[1][9]		RW	
0x0001c572	pSensorAECMask[1][10]		RW	
0x0001c573	pSensorAECMask[1][11]		RW	
0x0001c574	nMinLensOnlineGainThre	8'h00	RW	[15:8]
0x0001c575	nMinLensOnlineGainThre	8'h20	RW	[7:0]
0x0001c576	nMaxLensOnlineGainThre	8'h00	RW	[15:8]
0x0001c577	nMaxLensOnlineGainThre	8'hf0	RW	[7:0]

PRELIMINARY CONFIDENTIAL

Address	Register name	Default value	R/W	Descriptions
0x0001c578	nMinLensOnlineApplyGain	8'h00	RW	[6:0]
0x0001c579	bSpecialSimpleAWBMode	8'h00	RW	1 for enable and 0 for disable
0x0001c57a	nMeanYStableRange	8'h00	RW	
0x0001c57b	nReliableDist	8'h00	RW	
0x0001c57c	pCTCoX[0]	8'h00	RW	[15:8]
0x0001c57d	pCTCoX[0]	8'h00	RW	[7:0]
0x0001c57e	pCTCoX[1]	8'h00	RW	[15:8]
0x0001c57f	pCTCoX[1]	8'h00	RW	[7:0]
0x0001c580	pCTCoX[2]	8'h00	RW	[15:8]
0x0001c581	pCTCoX[2]	8'h00	RW	[7:0]
0x0001c582	pCTCoY[0]	8'h00	RW	[15:8]
0x0001c583	pCTCoY[0]	8'h00	RW	[7:0]
0x0001c584	pCTCoY[1]	8'h00	RW	[15:8]
0x0001c585	pCTCoY[1]	8'h00	RW	[7:0]
0x0001c586	pCTCoY[2]	8'h00	RW	[15:8]
0x0001c587	pCTCoY[2]	8'h00	RW	[7:0]
0x0001c588 ~ 0x0001c5af				reserved

PRELIMINARY CONFIDENTIAL

6.46 AF window definition registers

Address	Register name	Default value	R/W	Descriptions
0x0001c5b0	nWinMode		RW	1: 5x5 window mode 0: single window mode
0x0001c5b1	bIfAuto		RW	1: automatically select focus window by max contrast 0: contrast value is calculated either by weighted 5x5 window or by single window activated with nWinID

Address	Register name	Default value	R/W	Descriptions
				only works when nWinMode is 1
0x0001c5b2	bIfWeighted		RW	1: contrast value is calculated by weighted 5x5 window 0: contrast value is calculated by single window activated with nWinID only works when nWinMode is 1
0x0001c5b3	nWinID		RW	Active focus window ID, can be in [0, 24] with row order in 5x5 window mode. Always be 0 in single window mode.
0x0001c5b4	mWeightList[0]		RW	Weight for focus window 0 [15:8]
0x0001c5b5	mWeightList[0]		RW	Weight for focus window 0 [0:0]
0x0001c5b6	mWeightList[1]		RW	Weight for focus window 1 [15:8]
0x0001c5b7	mWeightList[1]		RW	Weight for focus window 1 [7:0]
~	~		~	~
0x0001c5e4	mWeightList[24]		RW	Weight for focus window 24 [15:8]
0x0001c5e5	mWeightList[24]		RW	Weight for focus window 24 [7:0]
0x0001c5e6				reserved
0x0001c5e7				reserved

6.47 AF control registers

Address	Register name	Default value	R/W	Descriptions
0x0001cc90	nGainValue		RW	sensor gain value [15:8]
0x0001cc91	nGainValue		RW	sensor gain value [7:0]
0x0001cc92	nT_Compare_1x		RW	threshold for contrast compare@1x [15:8]
0x0001cc93	nT_Compare_1x		RW	threshold for contrast compare@1x [7:0]
0x0001cc94	nT_Compare_16x		RW	threshold for contrast compare@16x [15:8]
0x0001cc95	nT_Compare_16x		RW	threshold for contrast compare@16x [7:0]
0x0001cc96	nT_sad_1x		RW	threshold for sad compare@1x [15:8]
0x0001cc97	nT_sad_1x		RW	threshold for sad compare@1x [7:0]

PRELIMINARY CONFIDENTIAL

Address	Register name	Default value	R/W	Descriptions
0x0001cc98	nT_sad_16x		RW	threshold for sad compare@16x [15:8]
0x0001cc99	nT_sad_16x		RW	threshold for sad compare@16x [7:0]
0x0001cc9a	nT_pre_sad_1x		RW	threshold for previous sad compare@1x [15:8]
0x0001cc9b	nT_pre_sad_1x		RW	threshold for previous sad compare@1x [7:0]
0x0001cc9c	nT_pre_sad_16x		RW	threshold for previous sad compare@16x [15:8]
0x0001cc9d	nT_pre_sad_16x		RW	threshold for previous sad compare@16x [7:0]
0x0001cc9e	nT_hist_1x		RW	threshold for histogram variation compare@1x [15:8]
0x0001cc9f	nT_hist_1x		RW	threshold for histogram variation compare@1x [7:0]
0x0001cca0	nT_hist_16x		RW	threshold for histogram variation compare@16x [15:8]
0x0001cca1	nT_hist_16x		RW	threshold for histogram variation compare@16x [7:0]
0x0001cca2	nT_contrast_diff		RW	threshold for scene change detection [15:8]
0x0001cca3	nT_contrast_diff		RW	threshold for scene change detection [7:0]
0x0001cca4	OffsetInit		RW	Down limit position of AF motor [15:8]
0x0001cca5	OffsetInit		RW	Down limit position of AF motor [7:0]
0x0001cca6	FullRange		RW	Up limit position of AF motor [15:8]
0x0001cca7	FullRange		RW	Up limit position of AF motor [7:0]
0x0001cca8	AFCMinStep		RW	AF motor minimum search step [15:8]
0x0001cca9	AFCMinStep		RW	AF motor minimum search step [7:0]
0x0001ccaa	AFCCoarseStep		RW	AF motor coarse search step [15:8]
0x0001ccab	AFCCoarseStep		RW	AF motor coarse search step [7:0]
0x0001ccac	AFCStartStep		RW	AF motor fine search step [15:8]
0x0001ccad	AFCStartStep		RW	AF motor fine search step [7:0]
0x0001ccae	delay		RW	motor movement time when AF motor lacks busy flag [15:8]
0x0001ccaf	delay		RW	motor movement time when AF motor lacks busy

PRELIMINARY CONFIDENTIAL

Address	Register name	Default value	R/W	Descriptions
				flag [7:0]
0x0001ccb0	nMotorWaitFrame		RW	Frame number past when motor move at AF tracking mode [15:8]
0x0001ccb1	nMotorWaitFrame		RW	Frame number past when motor move at AF tracking mode [7:0]
0x0001ccb2	InitVelocity		RW	Initial motor predict search step at AF tracking mode [15:8]
0x0001ccb3	InitVelocity		RW	Initial motor predict search step at AF tracking mode [7:0]
0x0001ccb4				reserved
~				~
0x0001cd09				reserved
0x0001cd0a	bAFActive		RW	1: active AF procedure 0: close AF procedure
0x0001cd0b	nAFMode		RW	1: video servo AF 0: snapshot AF
0x0001cd0c	nMotorType		RW	1: identify motor which has no busy flag 0: identify motor which has busy flag
0x0001cd0d	bMotorBusy		RW	1: motor is busy 0: motor is idle
0x0001cd0e	bSlowMotor		RW	1: identify slow motor 0: identify fast motor
0x0001cd0f	bFocusFlag		RW	1: object is in focus 0: object is out of focus
0x0001cd10	bPredictTrackingEnable		RW	1: enable tracking when at video servo AF mode 0: disable tracking when at video servo AF mode
0x0001cd11				reserved
~				~
0x0001cdc5				reserved
0x0001cdc6	nFocusI2COption		RW	[3] 1 for 16 bit address enable and 0 for disable [2] 1 for 16 bit data enable and 0 for disable

PRELIMINARY CONFIDENTIAL

Address	Register name	Default value	R/W	Descriptions
				[1:0] 0 for none, 1 for primary I2C and 2 for secondary I2C
0x0001cdc7	nFocusDeviceID		RW	
0x0001cdc8	pFocusMoveLensAddr[0]		RW	[15:8]
0x0001cdc9	pFocusMoveLensAddr[0]		RW	[7:0]
0x0001cdc	pFocusMoveLensAddr[1]		RW	[15:8]
0x0001cdcb	pFocusMoveLensAddr[1]		RW	[7:0]
0x0001cdcc	nFocusBusyAddr		RW	[15:8]
0x0001cdcd	nFocusBusyAddr		RW	[7:0]
0x0001cdce	nInFoucsWinNum		RW	[7:0]
0x0001cdcf	nInFocusWinList[0]		RW	[7:0]
0x0001cdd0	nInFocusWinList[1]		RW	[7:0]
0x0001cdd1	nInFocusWinList[2]		RW	[7:0]
0x0001cdd2	nInFocusWinList[3]		RW	[7:0]
0x0001cdd3	TInFocus		RW	In focus threshold
0x0001cdd4	nAFStatusFlag		RW	0 for processing, 1 for success and 2 for failure
0x0001cdd5	bRedrawFlag		RW	1 for Redraw enable
0x0001cdd6	nAFFlagHoldCounter		RW	
0x0001cdd7	nAFStartPartition		RW	
0x0001cdd8	nHyperFocalPos		RW	
0x0001cdd9	nHyperFocalPos		RW	
0x0001cdda	bIfHyperFocus		RW	
0x0001cddb	nLowContrastLim		RW	
0x0001cddc ~ 0x0001cddf				reserved

PRELIMINARY CONFIDENTIAL

6.48 Middle variables

Address	Register name	Default value	R/W	Descriptions
0x0001c5fc	pExpBuf[0][0]		RO	[15:8]
0x0001c5fd	pExpBuf[0][0]		RO	[7:0]
0x0001c5fe	pExpBuf[0][1]		RO	[15:8]
0x0001c5ff	pExpBuf[0][1]		RO	[7:0]
0x0001c600	pExpBuf[1][0]		RO	[15:8]
0x0001c601	pExpBuf[1][0]		RO	[7:0]
0x0001c602	pExpBuf[1][1]		RO	[15:8]
0x0001c603	pExpBuf[1][1]		RO	[7:0]
0x0001c604	pGainBuf[0][0]		RO	[15:8]
0x0001c605	pGainBuf[0][0]		RO	[7:0]
0x0001c606	pGainBuf[0][1]		RO	[15:8]
0x0001c607	pGainBuf[0][1]		RO	[7:0]
0x0001c608	pGainBuf[1][0]		RO	[15:8]
0x0001c609	pGainBuf[1][0]		RO	[7:0]
0x0001c60a	pGainBuf[1][1]		RO	[15:8]
0x0001c60b	pGainBuf[1][1]		RO	[7:0]
0x0001c760	pTotalMotion[0]		RO	[15:8]
0x0001c761	pTotalMotion[0]		RO	[7:0]
0x0001c762	pTotalMotion[1]		RO	[15:8]
0x0001c763	pTotalMotion[1]		RO	[7:0]
0x0001c764	pAbsStartPos[0]		RO	[15:8]
0x0001c765	pAbsStartPos[0]		RO	[7:0]
0x0001c766	pAbsStartPos[1]		RO	[15:8]
0x0001c767	pAbsStartPos[1]		RO	[7:0]
0x0001c768	pCropPos[0]		RO	[15:8]
0x0001c769	pCropPos[0]		RO	[7:0]

PRELIMINARY CONFIDENTIAL

Address	Register name	Default value	R/W	Descriptions
0x0001c76a	pCropPos[1]		RO	[15:8]
0x0001c76b	pCropPos[1]		RO	[7:0]
0x0001c774	nAFFrameWidth		RO	[15:8]
0x0001c775	nAFFrameWidth		RO	[7:0]
0x0001c776	nAFFrameHeight		RO	[15:8]
0x0001c777	nAFFrameHeight		RO	[7:0]
0x0001c778	nAFFrameStartPos[0][0]		RO	[15:8]
0x0001c779	nAFFrameStartPos[0][0]		RO	[7:0]
0x0001c77a	nAFFrameStartPos[0][1]		RO	[15:8]
0x0001c77b	nAFFrameStartPos[0][1]		RO	[7:0]
0x0001c77c	nAFFrameStartPos[1][0]		RO	[15:8]
0x0001c77d	nAFFrameStartPos[1][0]		RO	[7:0]
0x0001c77e	nAFFrameStartPos[1][1]		RO	[15:8]
0x0001c77f	nAFFrameStartPos[1][1]		RO	[7:0]
0x0001c780	nAFFrameStartPos[2][0]		RO	[15:8]
0x0001c781	nAFFrameStartPos[2][0]		RO	[7:0]
0x0001c782	nAFFrameStartPos[2][1]		RO	[15:8]
0x0001c783	nAFFrameStartPos[2][1]		RO	[7:0]
0x0001c784	nAFFrameStartPos[3][0]		RO	[15:8]
0x0001c785	nAFFrameStartPos[3][0]		RO	[7:0]
0x0001c786	nAFFrameStartPos[3][1]		RO	[15:8]
0x0001c787	nAFFrameStartPos[3][1]		RO	[7:0]
0x0001c790~ 0x0001c7cf	reserved		RO	

PRELIMINARY CONFIDENTIAL

7 Reference design

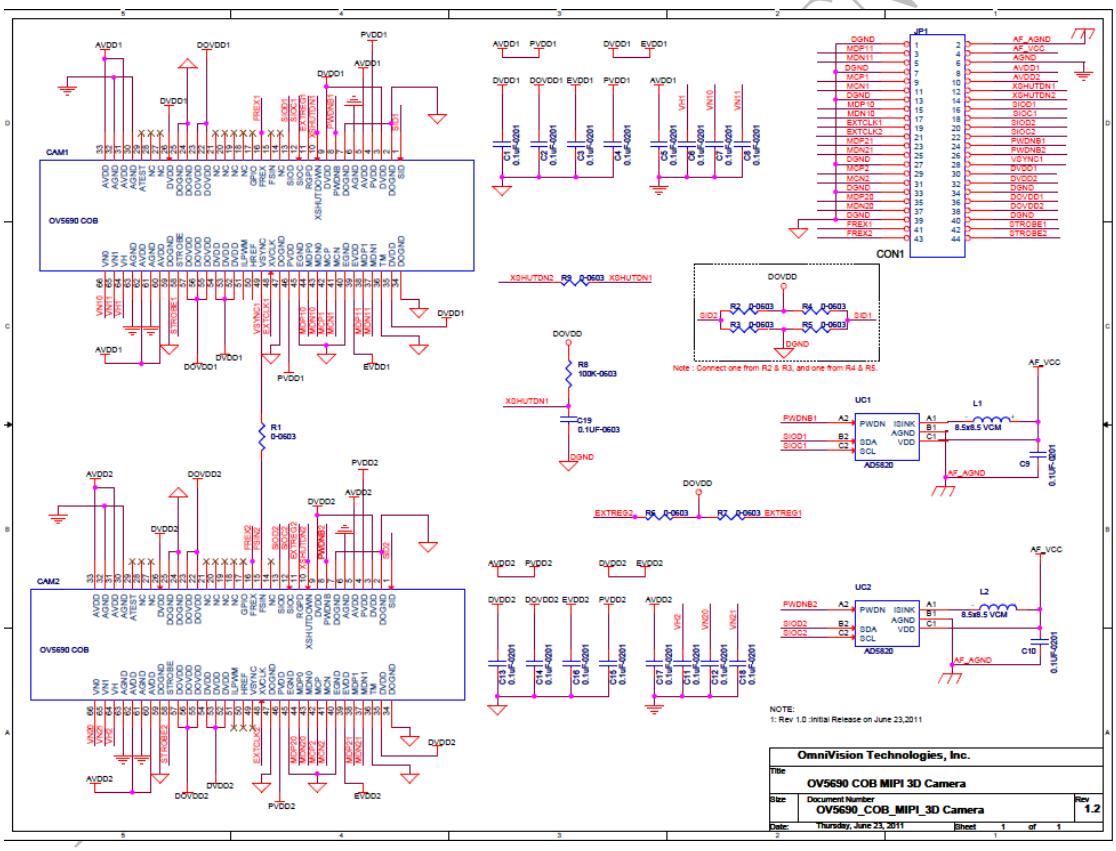

Figure 7-1 OV5690 for 3D MIPI

NOTE:

1: CAM1 is main camera, CAM2 is sub-camera

2: DOVDD1 & DOVDD2, DVDD1&DVDD2, AVDD1&AVDD2 should be connected outside if 2 sensors shared the power.

3: R8, R9 should be connected if XSHUTDN1 and XSHUTDN2 are not confrolled from CON1.

4: R2(SID2=0x20),R5(SID1=0x6c) or R3(SID2=0x6c),R4(SID=0x20) should be

connected if 2 sensors use different DEV Address.

5. SIOD1 and SIOD2, SIOC1 and SIOC2 should be connected outside if 2 sensors shared the SCCB.
6. R6, R7 should be connected if used external DVDD.
7. PWDNB1 PWDNB2 should be low if sensor power is down.

PRELIMINARY CONFIDENTIAL