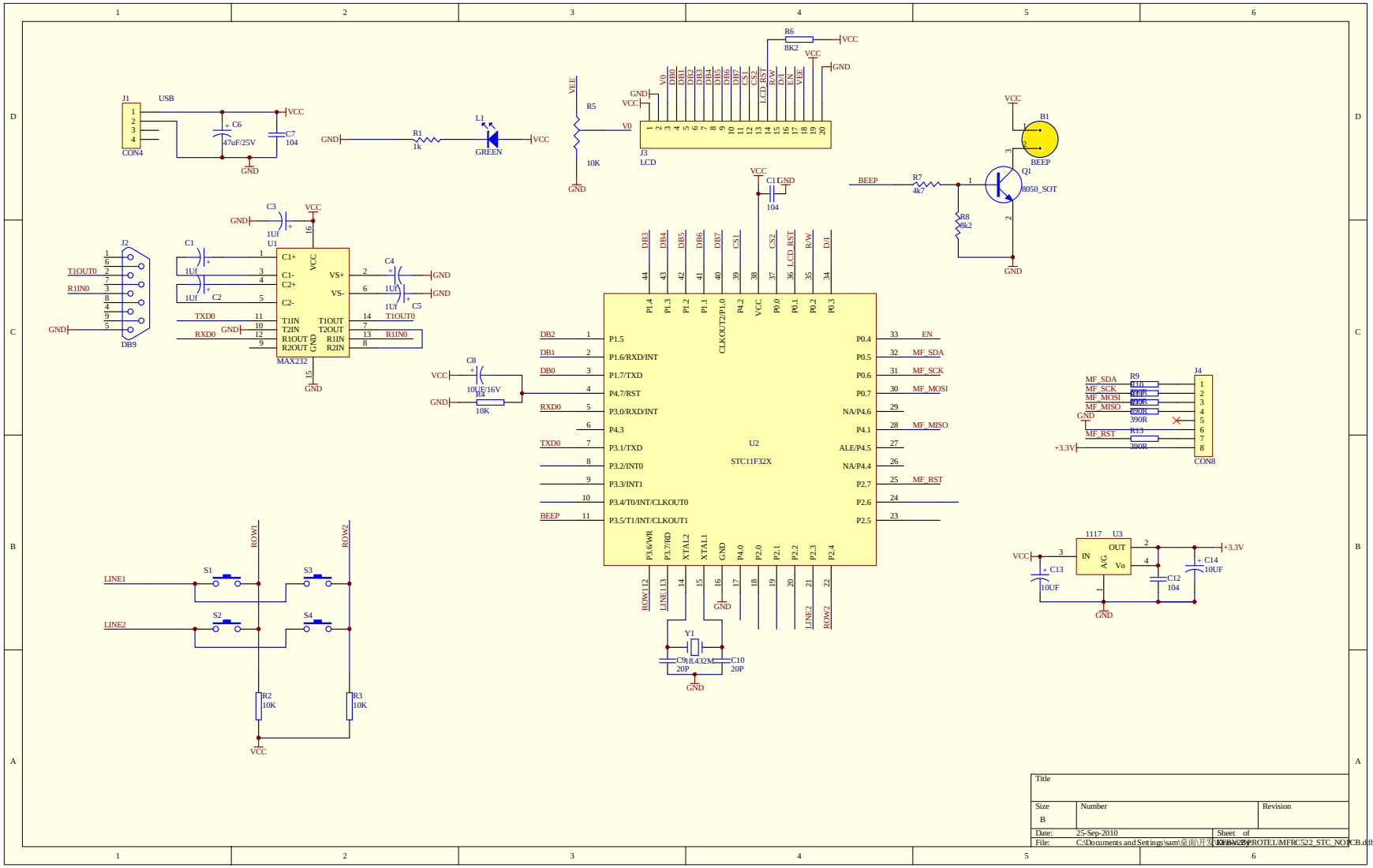
J1
USB
CON4
C6
47uF/25V
C7
104
VCC
GND
R1
1k
L1
GREEN
R5
10K
VEE
V0
R6
8K2
J3
LCD
DB0 DB1 DB2 DB3 DB4 DB5 DB6 DB7 CS1 CS2 LCD_RST R/W D/I EN VEE
B1
BEEP
Q1
8050_SOT
R7
4k7
R8
8k2
C1
104
J2
DB9
T1OUT0
R1IN0
C1
C2
C3
C4
C5
U1
MAX232
C1+ C1- C2+ C2- VS+ VS- T1IN T2IN R1OUT R2OUT T1OUT T2OUT R1IN R2IN
TXD0
RXD0
C8
10UF/16V
R4
10K
U2
STC11F32X
P1.5 P1.6/RXD/INT P1.7/TXD P4.7/RST P3.0/RXD/INT P4.3 P3.1/TXD P3.2/INT0 P3.3/INT1 P3.4/T0/INT/CLKOUT0 P3.5/T1/INT/CLKOUT1
P0.4 P0.5 P0.6 P0.7 NA/P4.6 P4.1 ALE/P4.5 NA/P4.4 P2.7 P2.6 P2.5
EN
MF_SDA
MF_SCK
MF_MOSI
MF_MISO
MF_RST
R9
R10
R11
R12
R13
390R
J4
CON8
+3.3V
U3
1117
IN OUT A/G Vo
C13
10UF
C12
104
C14
10UF
Y1
18.432M
C9
20P
C10
20P
ROW1
ROW2
LINE1
LINE2
S1
S2
S3
S4
R2
10K
R3
10K
Title
Size
B
Number
Revision
Date:
25-Sep-2010
Sheet of
File:
C:\Documents and Settings\sam\桌面\开发板\RFID\PROTEL\MFRC522_STC_NOJCB.ddb