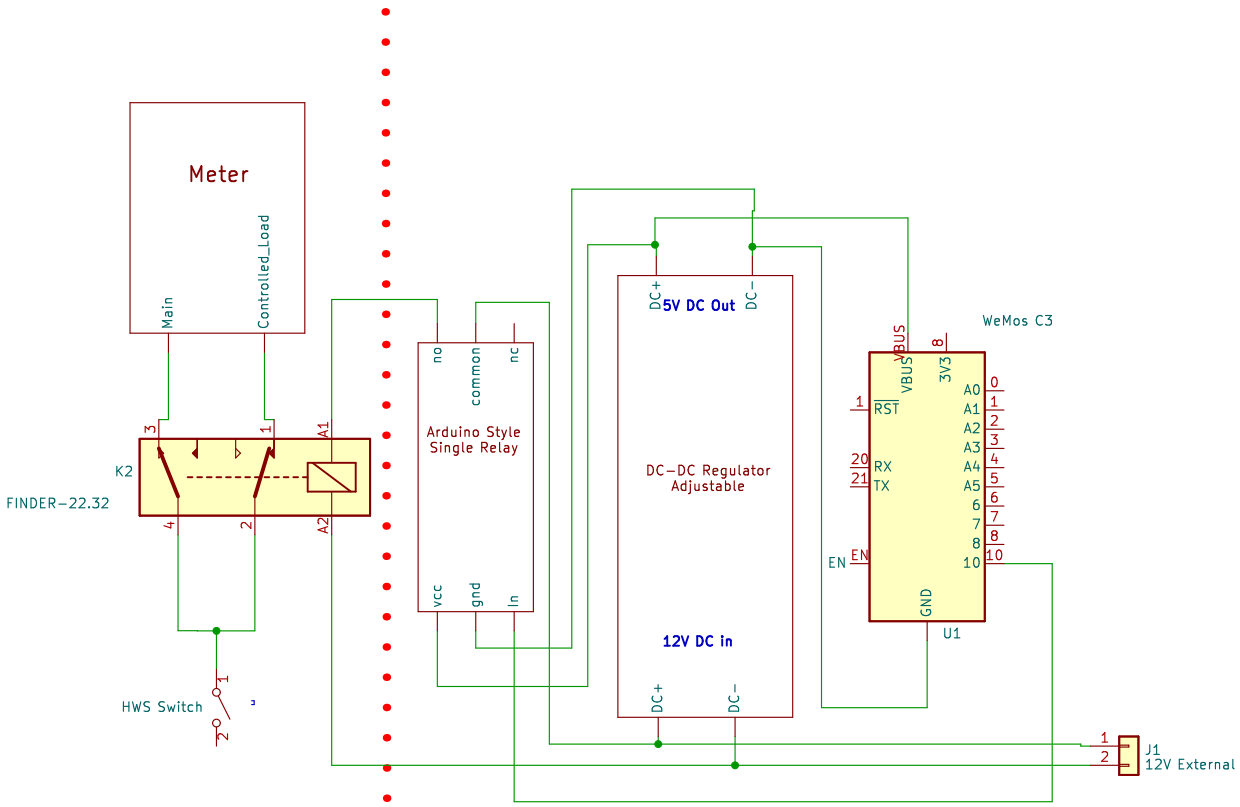

240V Electrician Only

Low Voltage
External to Switchboard

Sheet:		
File: HWSRedirector.kicad_sch		
Title: ESP32/8266 Hot Water Redirector		
Size: A4	Date:	**Rev:**
KiCad E.D.A. kicad (7.0.0)		Id: 1/1