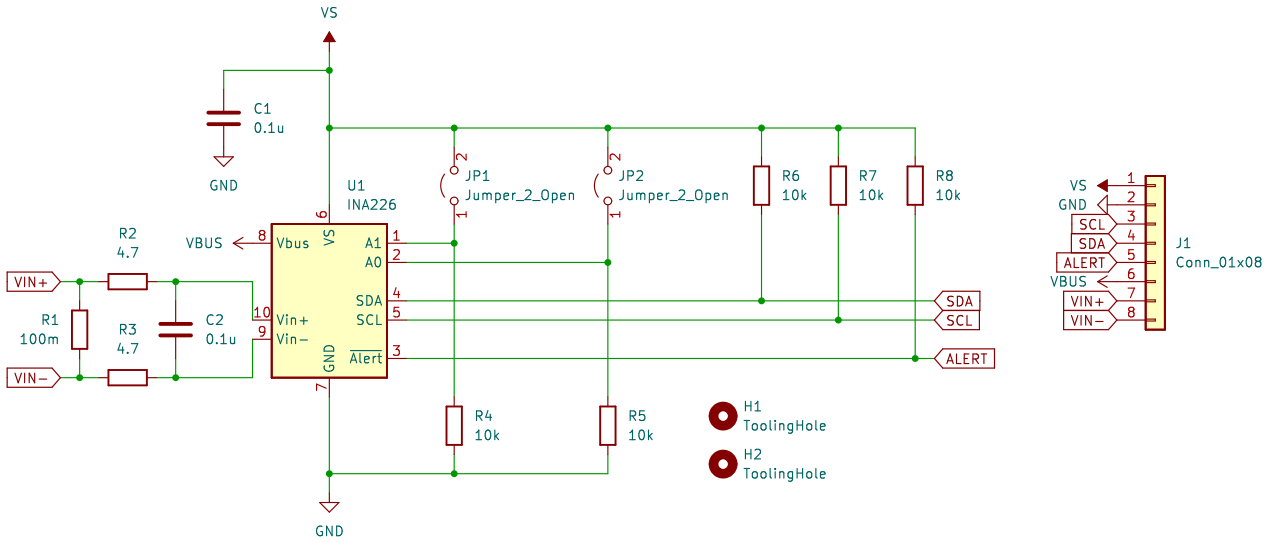

Sheet: /
File: Ammeter.kicad_sch

Title: Ammeter

Size: A4	Date:	Rev:
KiCad E.D.A. kicad 7.0.7		Id: 1/1