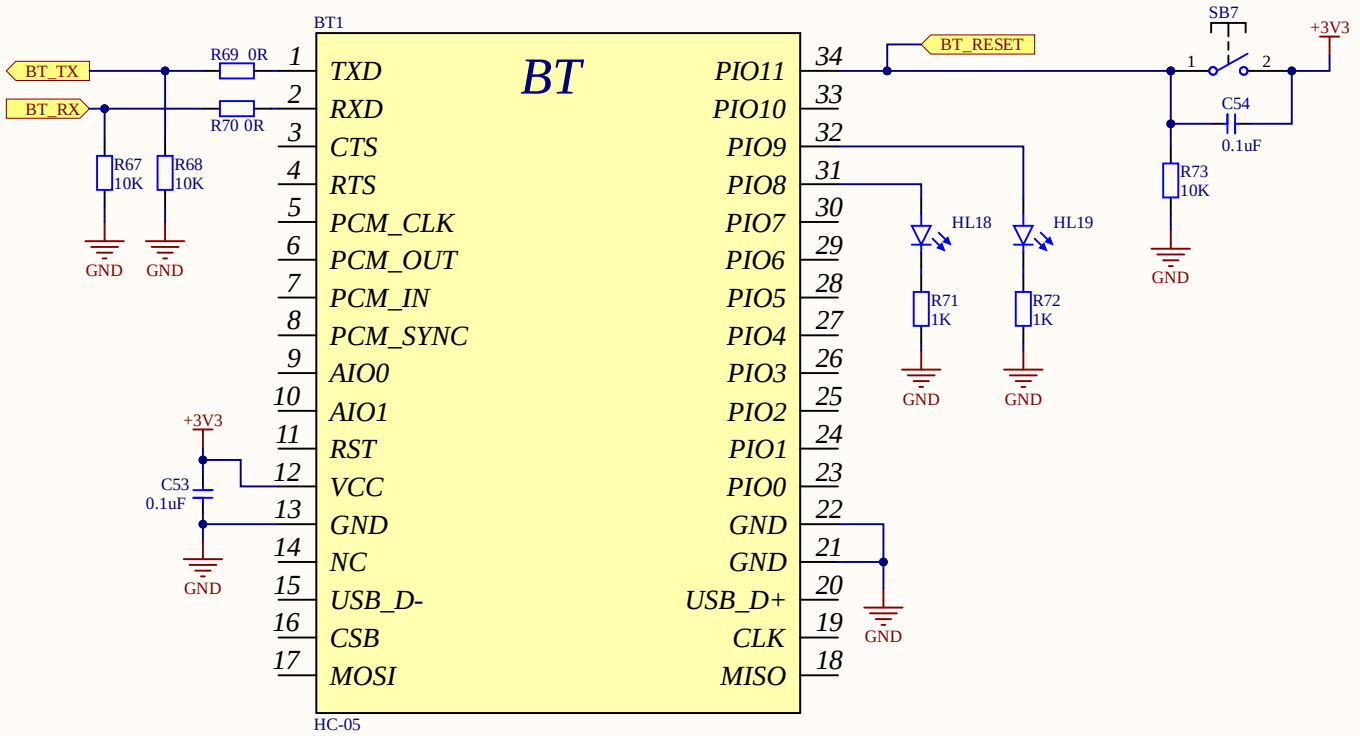

Title		
Size A4	Number	Revision
Date: 3.06.2024		Sheet of
File: C:\Users\..\bluetooth.SchDoc		Drawn By: