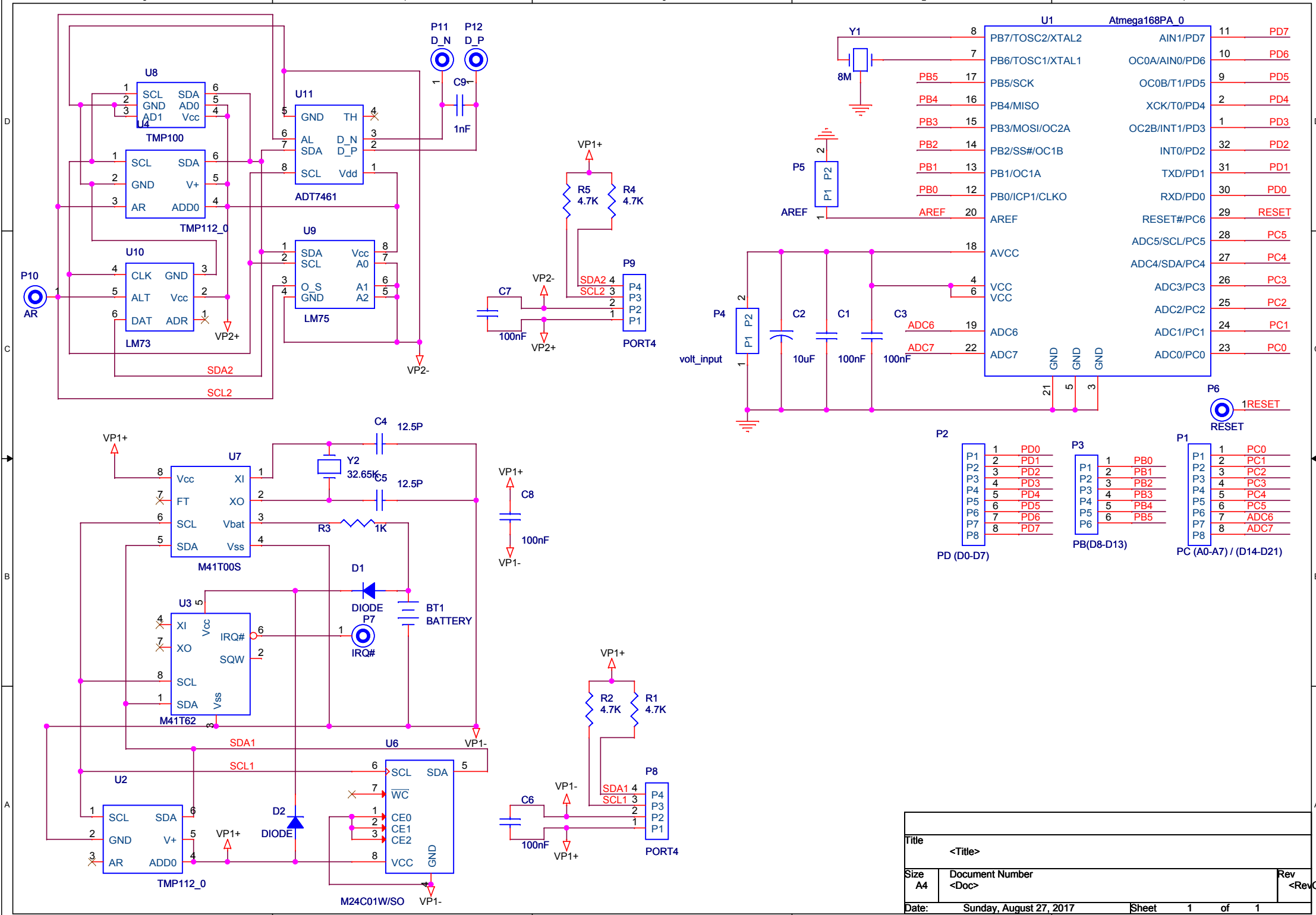

Title	<Title>		
Size A4	Document Number <Doc>		Rev <RevCode>
Date: Sunday, August 27, 2017		Sheet 1 of 1	