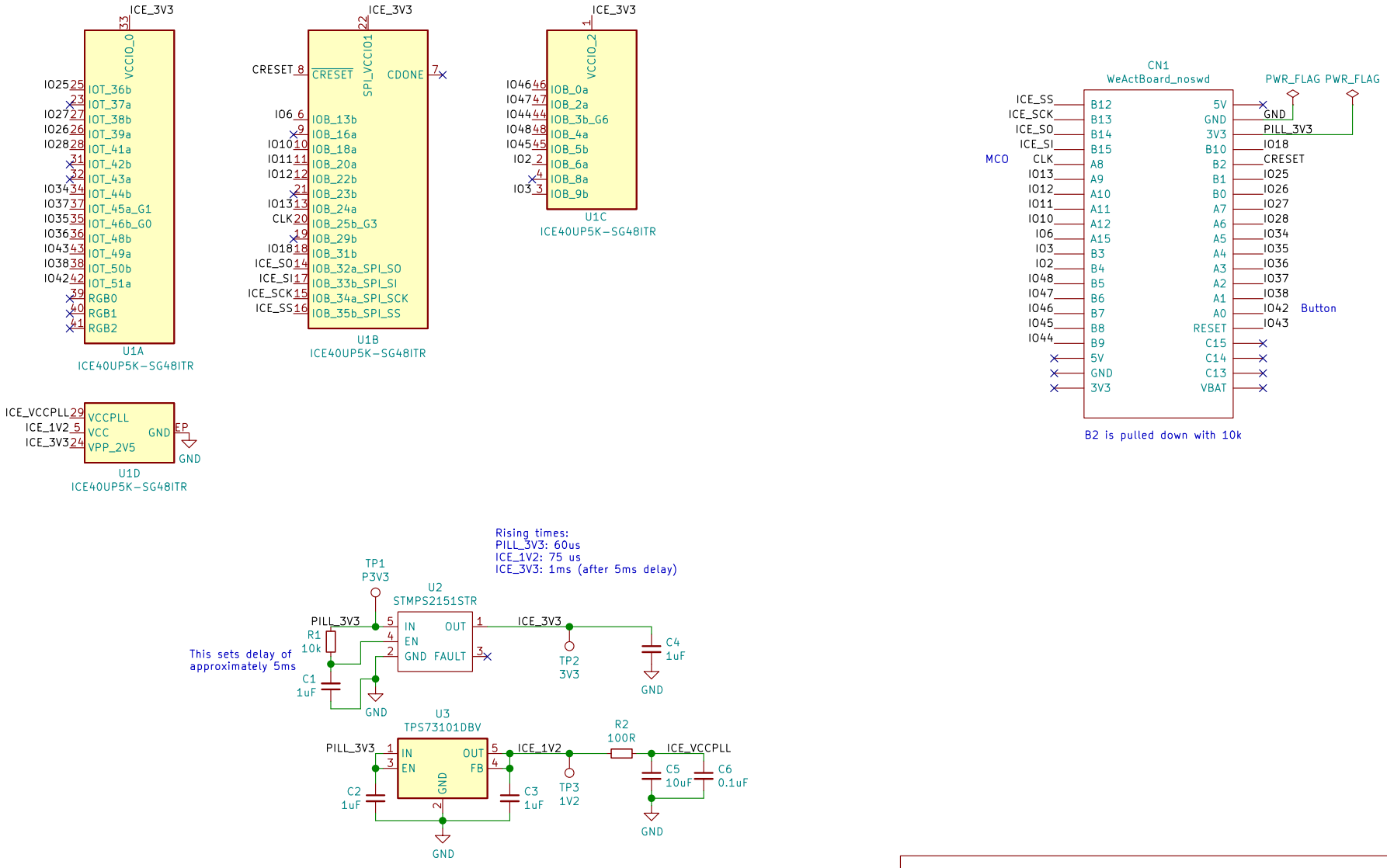

Sheet: /
File: leech.sch

Title:

Size: A4	Date:	Rev:
KiCad E.D.A. kicad 5.1.8		Id: 1/1