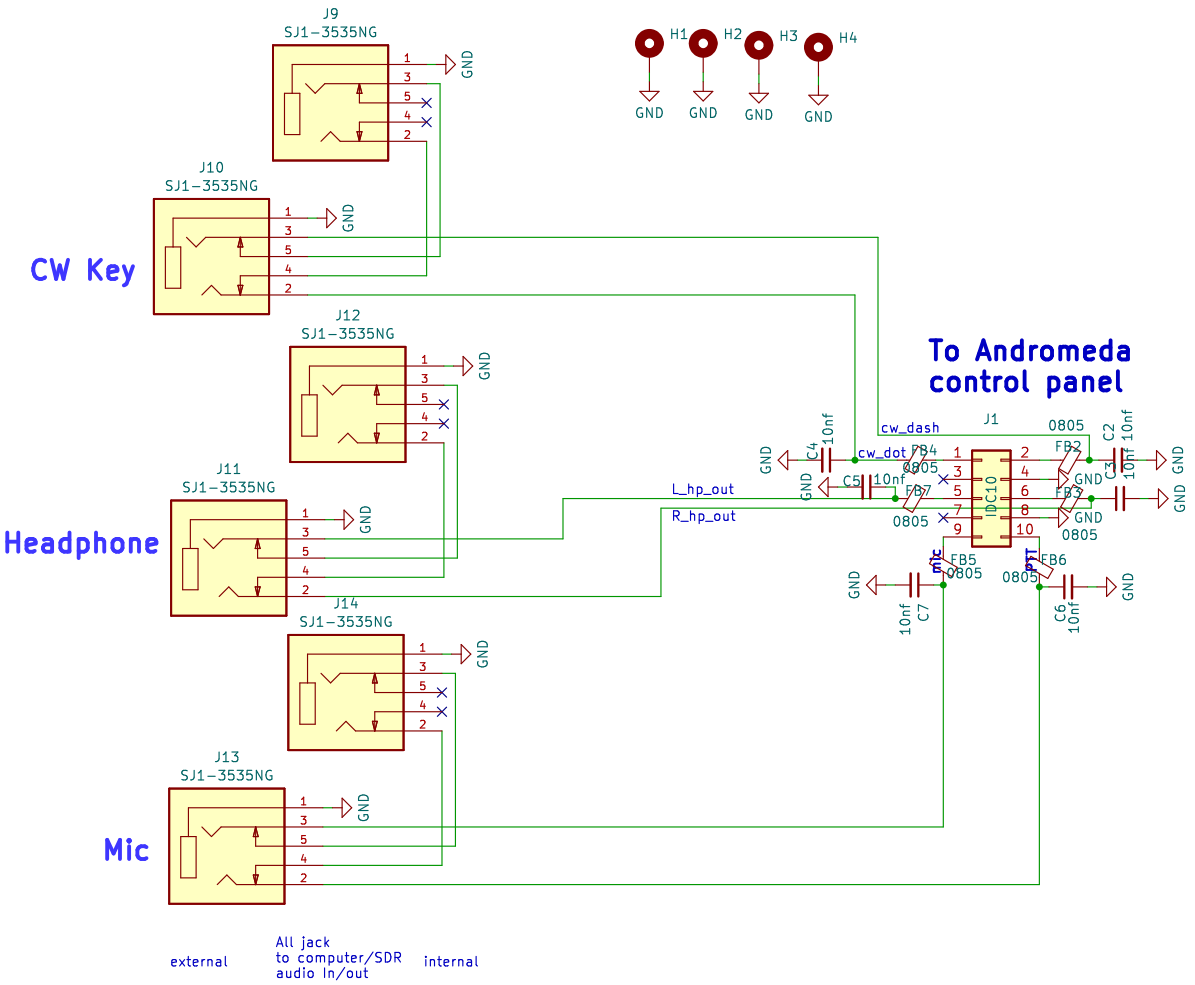


Most "Computer Condenser" microphones will work when directly plugged into the MIC connector on the front panel of the Apache Transceiver. The Factory settings for Apache Transceivers is to have a small positive voltage applied to the TIP of the connector for powering a condenser microphone. The RING is connected to push-to-talk, and the SLEEVE is connected to the Transceiver analog ground. The SPACE BAR of your keyboard acts as the default push-to-talk for all microphones. A Computer Condenser mic without a push-totalk switch can easily be used by substituting the SPACE BAR of your KEYBOARD.

A pair of 5W 8 Ohms loudspeakers can be internally plugged on each audio output of the TPA0202. These are differential output (3 Pin J8&J9). Beware to not ground any of the two output wires to avoid destruction of U21

Note :

J13 is 100Mb/s. For 1000 Mb/s, no jumper
jp5 Mic Bias (see schema)
JP6 select ptt if exists
P2 is Hermes Altera Jtag for USB Blaster
P1 is Altera serial : don't care
J15 is Alex
J17 Angelia bootloader flash EN (J12 Hermes)

# Kêtos audio dispatching board

Sheet: /
File: K_BF.kicad_sch

**Title:**

| Size: A4 | Date: | Rev: |
|---|---|---|
| KiCad E.D.A. kicad 7.0.7 | | Id: 1/1 |