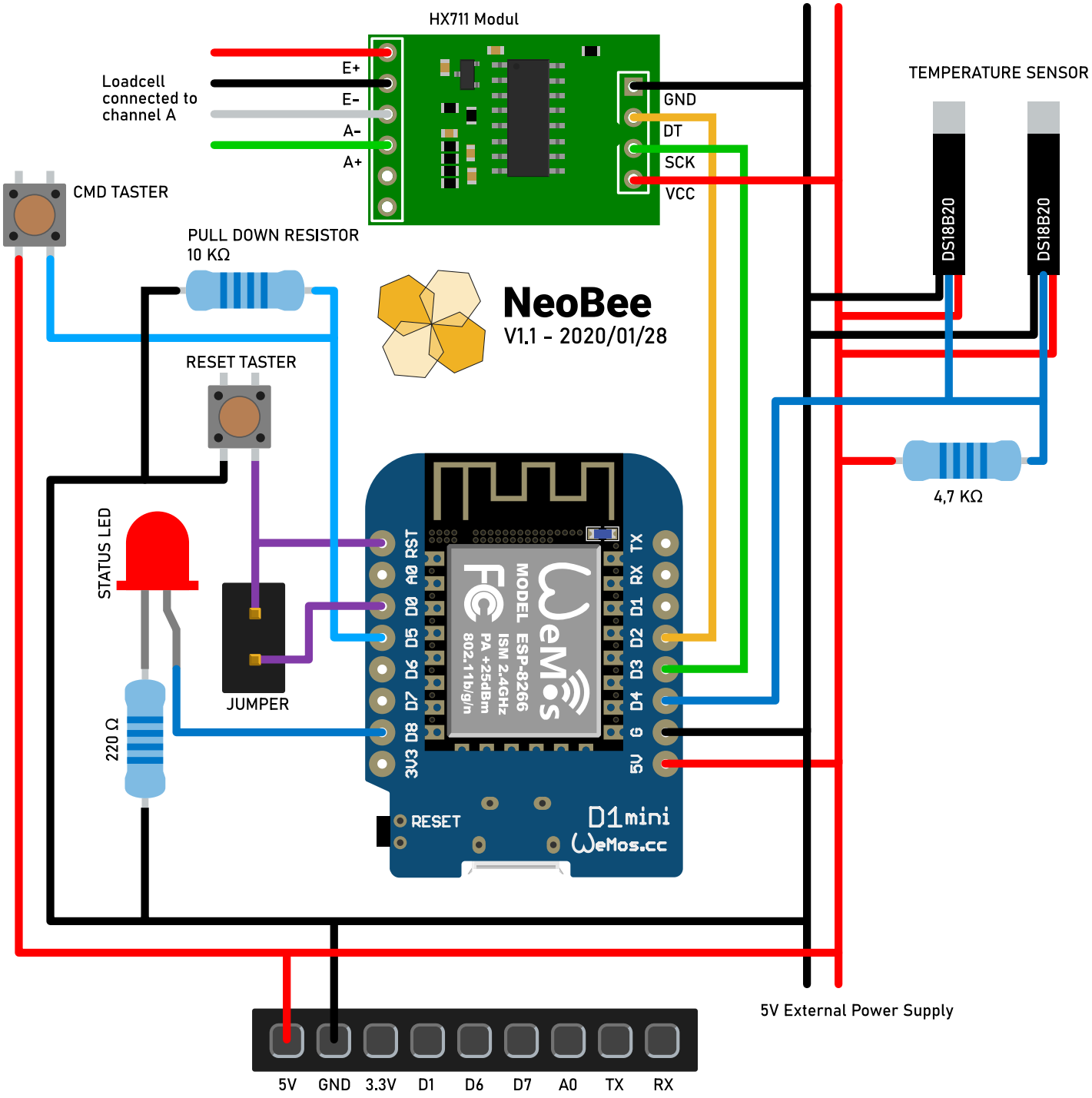

Source: https://github.com/FirstKlaas/neobee/blob/master/documentation/drawings/Circuit.pdf