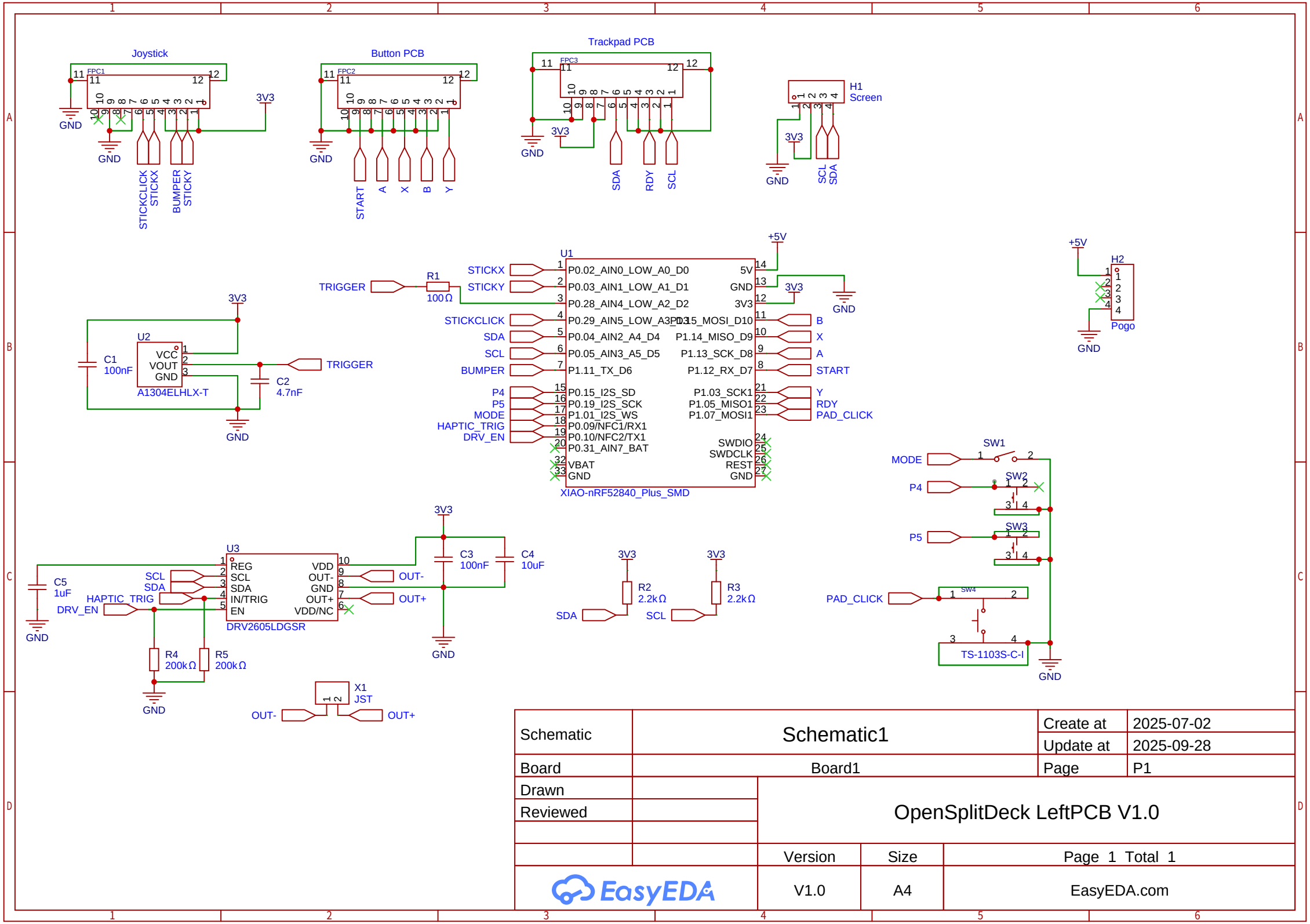

Schematic	Schematic1	Create at	2025-07-02
		Update at	2025-09-28
Board	Board1	Page	P1
Drawn		OpenSplitDeck LeftPCB V1.0	
Reviewed			
		Version	Size	Page 1 Total 1
EasyEDA		V1.0	A4	EasyEDA.com