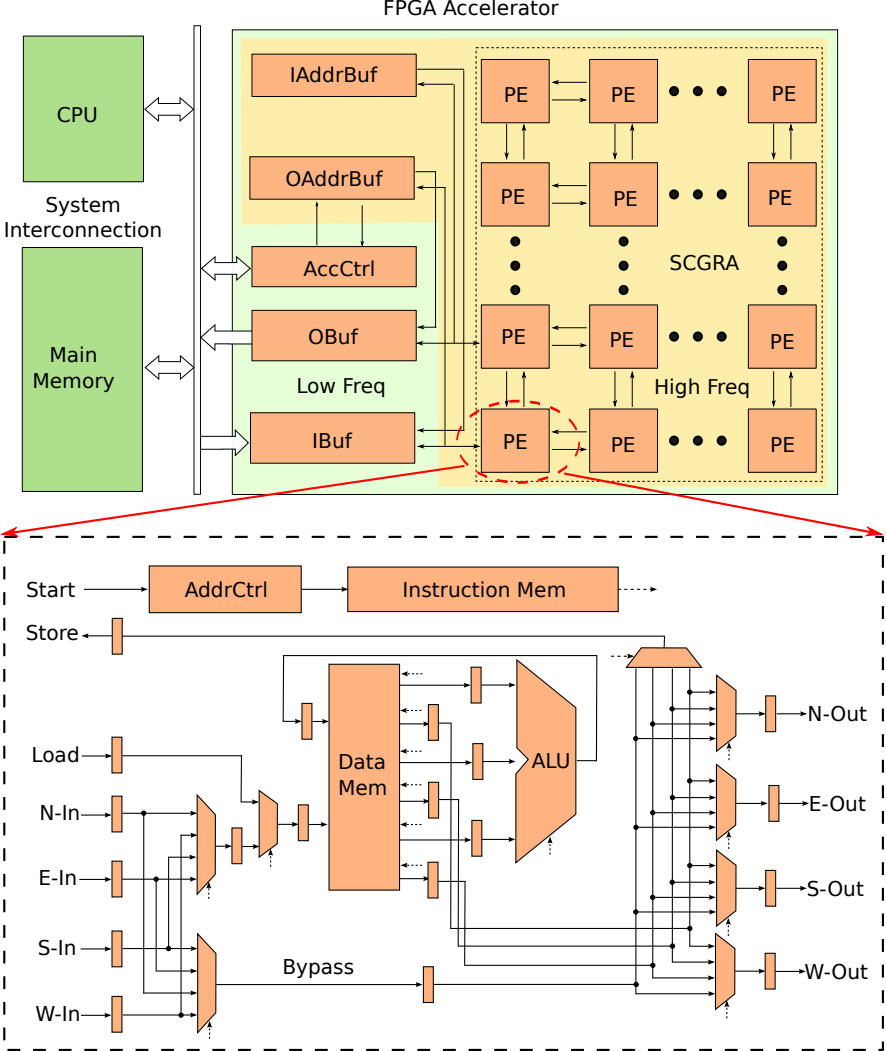
FPGA Accelerator
CPU
System Interconnection
Main Memory
IAddrBuf
OAddrBuf
AccCtrl
OBuf
IBuf
Low Freq
PE
SCGRA
High Freq
Start
AddrCtrl
Instruction Mem
Store
Load
N-In
E-In
S-In
W-In
Data Mem
ALU
Bypass
N-Out
E-Out
S-Out
W-Out