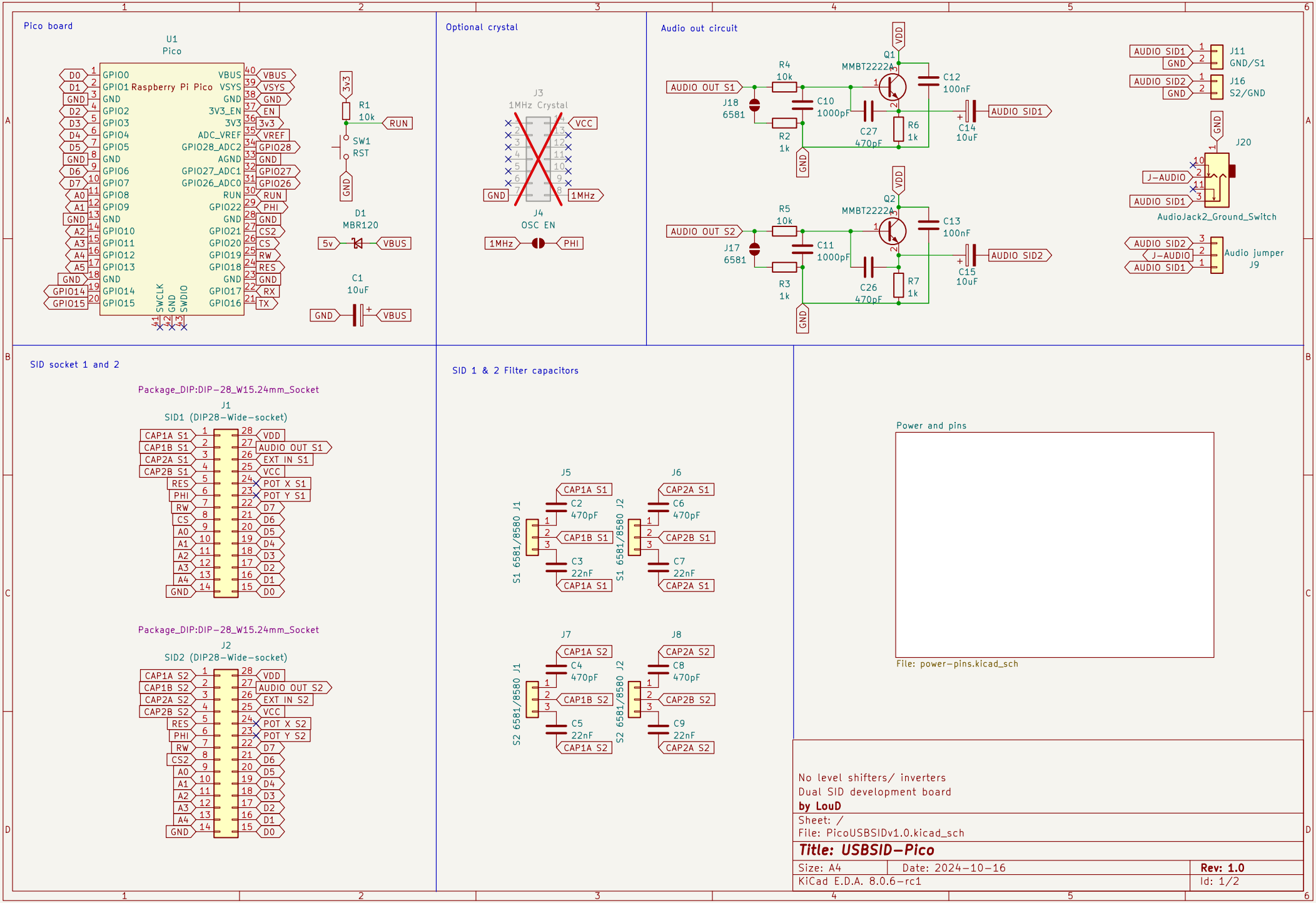
Pico board
U1
Pico
Raspberry Pi Pico
GPIO0
GPIO1
GND
GPIO2
GPIO3
GPIO4
GPIO5
GND
GPIO6
GPIO7
GPIO8
GPIO9
GND
GPIO10
GPIO11
GPIO12
GPIO13
GND
GPIO14
GPIO15
VBUS
VSYS
GND
3V3_EN
3V3
ADC_VREF
GPIO28_ADC2
AGND
GPIO27_ADC1
GPIO26_ADC0
RUN
GPIO22
GND
GPIO21
GPIO20
GPIO19
GPIO18
GND
GPIO17
GPIO16
SWCLK
GND
SWDIO
R1
10k
RUN
SW1
RST
D1
MBR120
5v
VBUS
C1
10uF
Optional crystal
J3
1MHz Crystal
VCC
GND
1MHz
J4
OSC EN
1MHz
PHI
Audio out circuit
AUDIO OUT S1
J18
6581
R4
10k
R2
1k
C10
1000pF
C27
470pF
Q1
MMBT2222A
R6
1k
C12
100nF
C14
10uF
AUDIO SID1
VDD
GND
AUDIO OUT S2
J17
6581
R5
10k
R3
1k
C11
1000pF
C26
470pF
Q2
MMBT2222A
R7
1k
C13
100nF
C15
10uF
AUDIO SID2
AUDIO SID1
GND
J11
GND/S1
AUDIO SID2
GND
J16
S2/GND
J20
J-AUDIO
AUDIO SID1
AudioJack2_Ground_Switch
AUDIO SID2
J-AUDIO
AUDIO SID1
Audio jumper
J9
SID socket 1 and 2
Package_DIP:DIP-28_W15.24mm_Socket
J1
SID1 (DIP28-Wide-socket)
CAP1A S1
CAP1B S1
CAP2A S1
CAP2B S1
RES
PHI
RW
CS
A0
A1
A2
A3
A4
GND
VDD
AUDIO OUT S1
EXT IN S1
VCC
POT X S1
POT Y S1
D7
D6
D5
D4
D3
D2
D1
D0
Package_DIP:DIP-28_W15.24mm_Socket
J2
SID2 (DIP28-Wide-socket)
CAP1A S2
CAP1B S2
CAP2A S2
CAP2B S2
RES
PHI
RW
CS2
A0
A1
A2
A3
A4
GND
VDD
AUDIO OUT S2
EXT IN S2
VCC
POT X S2
POT Y S2
D7
D6
D5
D4
D3
D2
D1
D0
SID 1 & 2 Filter capacitors
J5
S1 6581/8580 J1
CAP1A S1
C2
470pF
CAP1B S1
C3
22nF
CAP1A S1
J6
S1 6581/8580 J2
CAP2A S1
C6
470pF
CAP2B S1
C7
22nF
CAP2A S1
J7
S2 6581/8580 J1
CAP1A S2
C4
470pF
CAP1B S2
C5
22nF
CAP1A S2
J8
S2 6581/8580 J2
CAP2A S2
C8
470pF
CAP2B S2
C9
22nF
CAP2A S2
Power and pins
File: power-pins.kicad_sch
No level shifters/ inverters
Dual SID development board
by LouD
Sheet: /
File: PicoUSBSIDv1.0.kicad_sch
Title: USBSID-Pico
Size: A4
Date: 2024-10-16
Rev: 1.0
KiCad E.D.A. 8.0.6-rc1
Id: 1/2

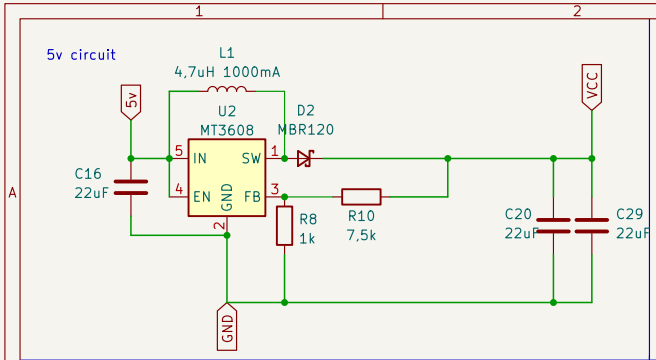

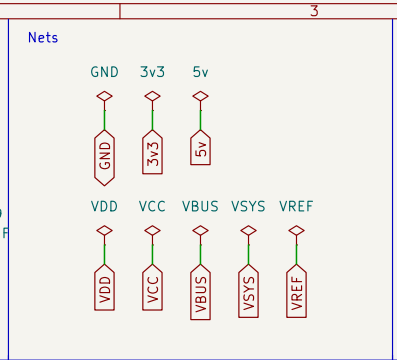

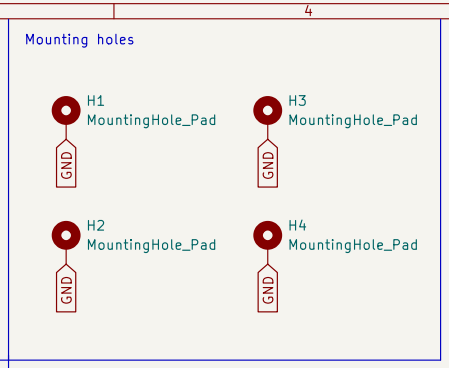

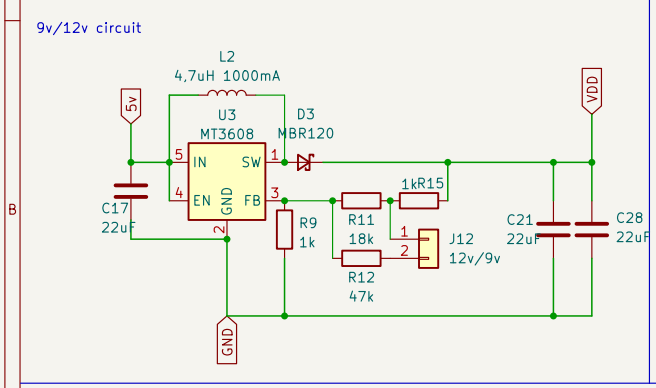

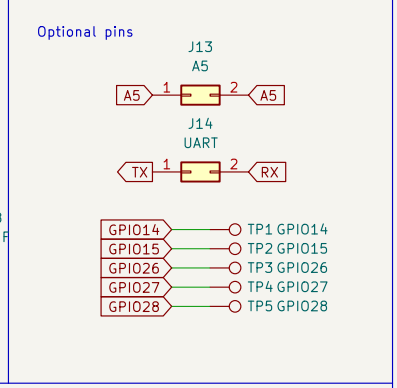

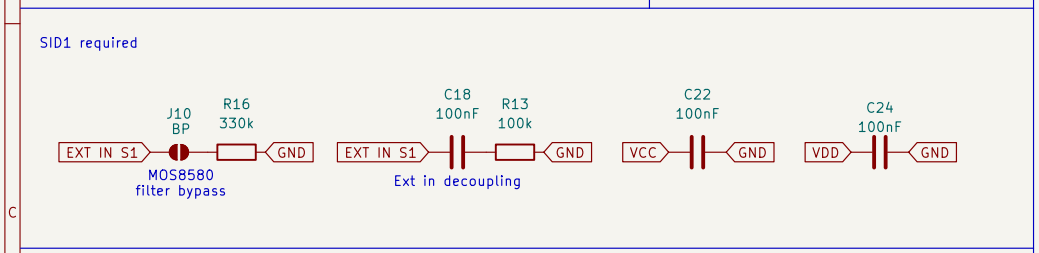

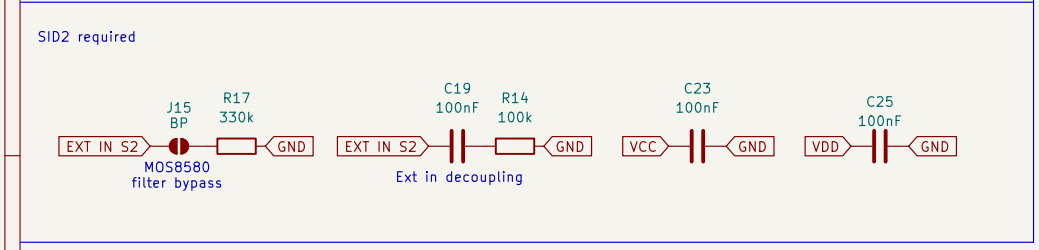

No level shifters/ inverters
Dual SID development board
by LouD

Sheet: /Power and pins/
File: power-pins.kicad_sch

Title: USBSID-Pico

Size: A4	Date: 2024-10-16	**Rev: 1.0**
KiCad E.D.A. 8.0.6-rc1		Id: 2/2