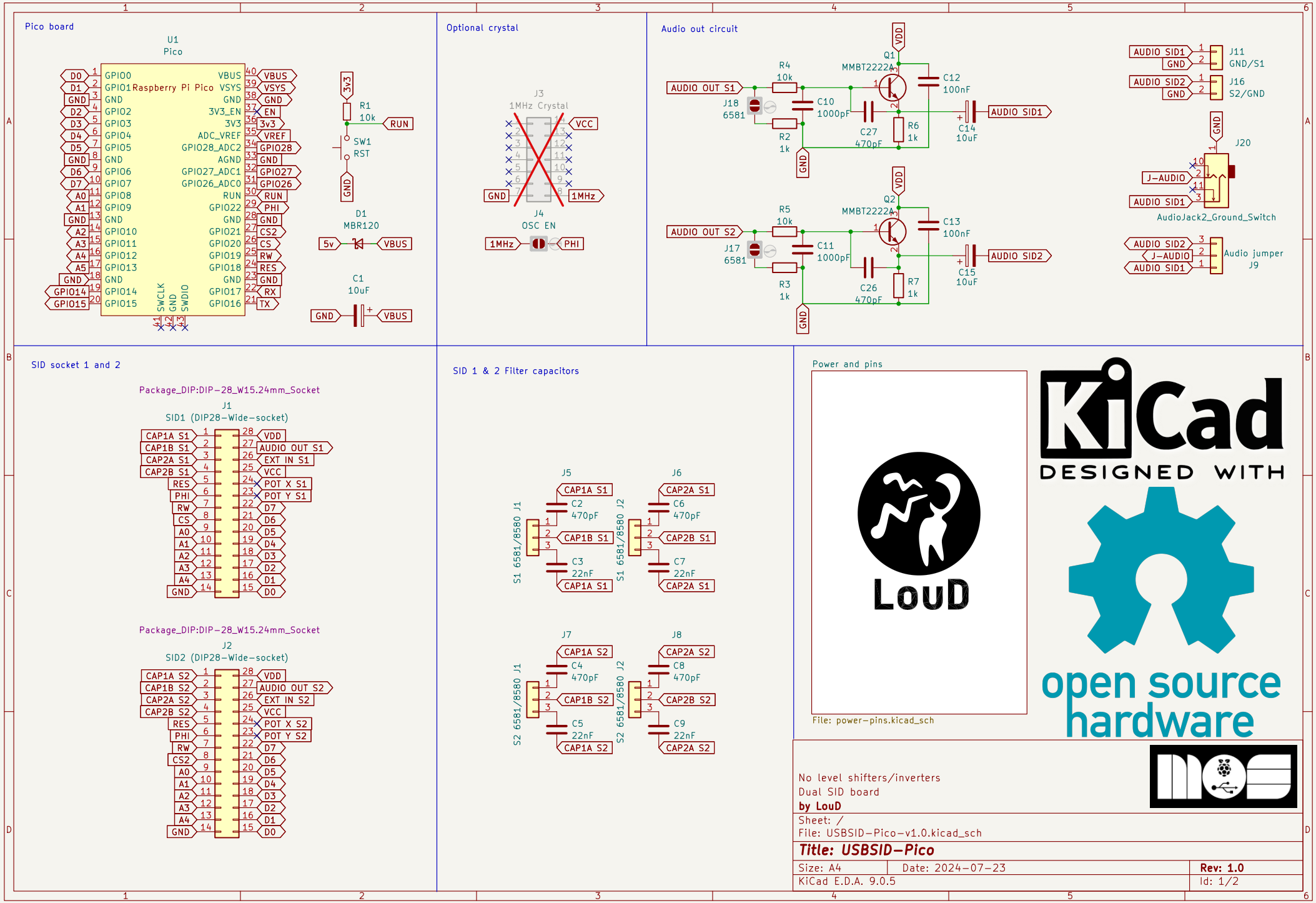
Pico board
U1
Pico
Raspberry Pi Pico
GPIO0 GPIO1 GND GPIO2 GPIO3 GPIO4 GPIO5 GND GPIO6 GPIO7 GPIO8 GPIO9 GND GPIO10 GPIO11 GPIO12 GPIO13 GND GPIO14 GPIO15
VBUS VSYS GND 3V3_EN 3V3 ADC_VREF GPIO28_ADC2 AGND GPIO27_ADC1 GPIO26_ADC0 RUN GPIO22 GND GPIO21 GPIO20 GPIO19 GPIO18 GND GPIO17 GPIO16
SWCLK GND SWDIO
D0 D1 GND D2 D3 D4 D5 GND D6 D7 A0 A1 GND A2 A3 A4 A5 GND GPIO14 GPIO15
VBUS VSYS GND EN 3v3 VREF GPIO28 GND GPIO27 GPIO26 RUN PHI GND CS2 CS RW RES GND RX TX
3v3
R1
10k
RUN
SW1
RST
GND
D1
MBR120
5v
VBUS
C1
10uF
GND
VBUS
Optional crystal
J3
1MHz Crystal
VCC
GND
1MHz
J4
OSC EN
1MHz
PHI
Audio out circuit
VDD
Q1
MMBT2222A
R4
10k
AUDIO OUT S1
J18
6581
C10
1000pF
R2
1k
GND
C27
470pF
R6
1k
C12
100nF
C14
10uF
AUDIO SID1
Q2
MMBT2222A
R5
10k
AUDIO OUT S2
J17
6581
C11
1000pF
R3
1k
C26
470pF
R7
1k
C13
100nF
C15
10uF
AUDIO SID2
AUDIO SID1
GND
J11
GND/S1
AUDIO SID2
GND
J16
S2/GND
J20
J-AUDIO
AUDIO SID1
AudioJack2_Ground_Switch
AUDIO SID2
J-AUDIO
AUDIO SID1
Audio jumper
J9
SID socket 1 and 2
Package_DIP:DIP-28_W15.24mm_Socket
J1
SID1 (DIP28-Wide-socket)
CAP1A S1 CAP1B S1 CAP2A S1 CAP2B S1 RES PHI RW CS A0 A1 A2 A3 A4 GND
VDD AUDIO OUT S1 EXT IN S1 VCC POT X S1 POT Y S1 D7 D6 D5 D4 D3 D2 D1 D0
Package_DIP:DIP-28_W15.24mm_Socket
J2
SID2 (DIP28-Wide-socket)
CAP1A S2 CAP1B S2 CAP2A S2 CAP2B S2 RES PHI RW CS2 A0 A1 A2 A3 A4 GND
VDD AUDIO OUT S2 EXT IN S2 VCC POT X S2 POT Y S2 D7 D6 D5 D4 D3 D2 D1 D0
SID 1 & 2 Filter capacitors
J5
S1 6581/8580 J1
CAP1A S1
C2
470pF
CAP1B S1
C3
22nF
CAP1A S1
J6
S1 6581/8580 J2
CAP2A S1
C6
470pF
CAP2B S1
C7
22nF
CAP2A S1
J7
S2 6581/8580 J1
CAP1A S2
C4
470pF
CAP1B S2
C5
22nF
CAP1A S2
J8
S2 6581/8580 J2
CAP2A S2
C8
470pF
CAP2B S2
C9
22nF
CAP2A S2
Power and pins
LouD
File: power-pins.kicad_sch
KiCad
DESIGNED WITH
open source hardware
No level shifters/inverters
Dual SID board
by LouD
Sheet: /
File: USBSID-Pico-v1.0.kicad_sch
Title: USBSID-Pico
Size: A4
Date: 2024-07-23
Rev: 1.0
KiCad E.D.A. 9.0.5
Id: 1/2

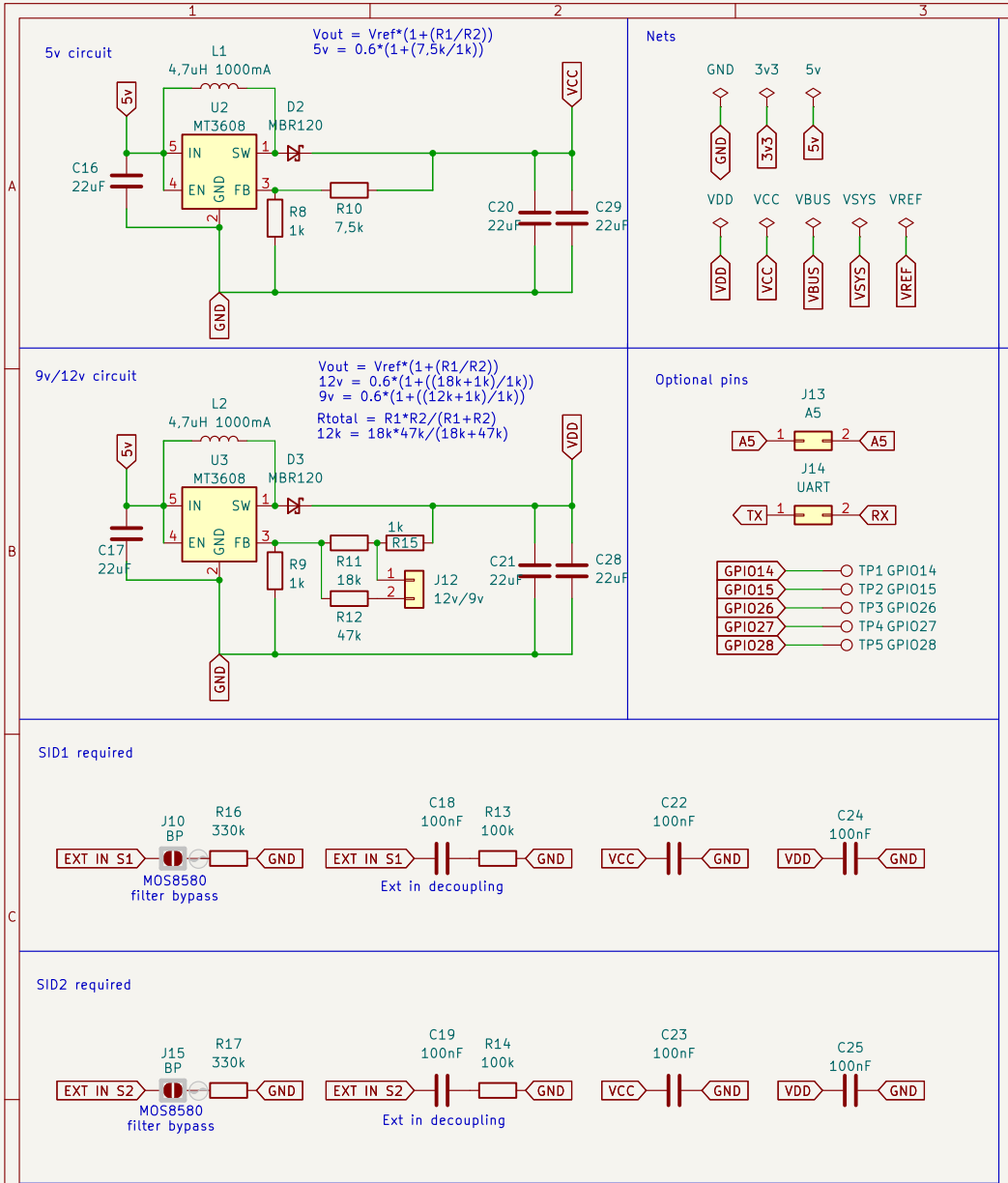

No level shifters/inverters
Dual SID board
by LouD

Sheet: /Power and pins/
File: power-pins.kicad_sch

Title: USBSID-Pico

Size: A4	Date: 2024-07-23	**Rev: 1.0**
KiCad E.D.A. 9.0.5		Id: 2/2