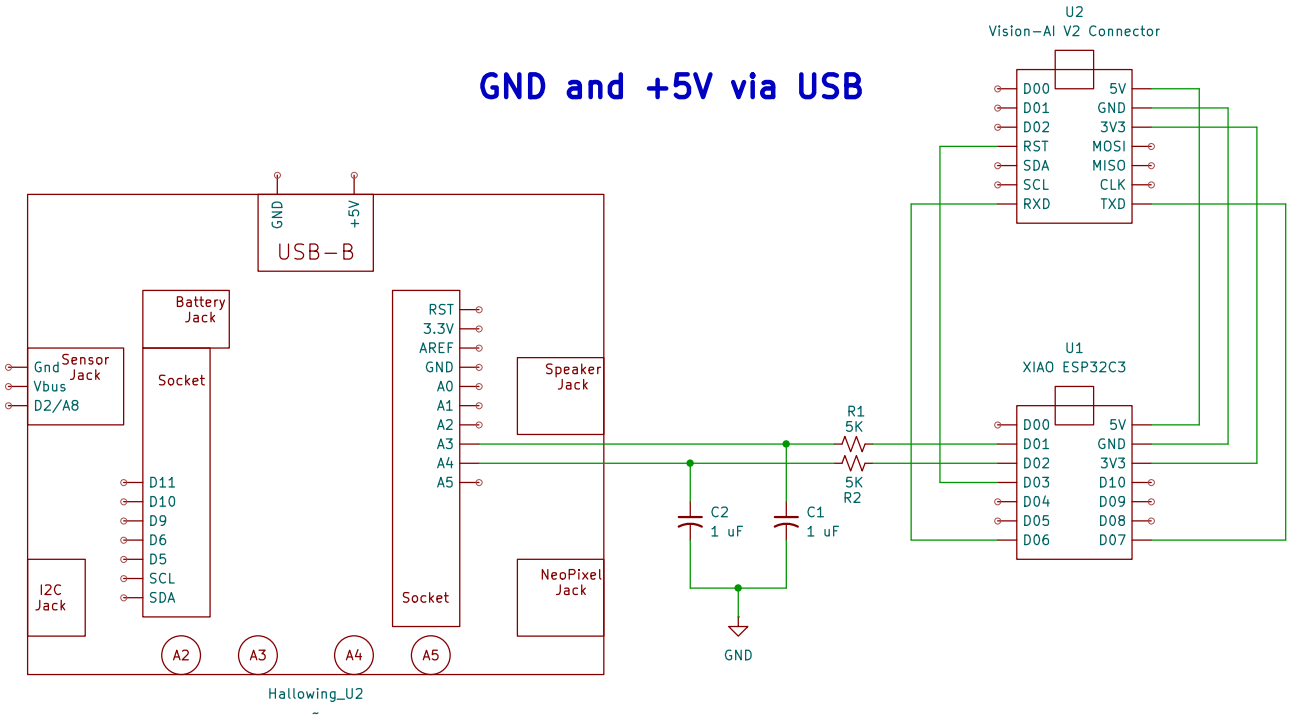

Self: https://github.com/Mark-MD047

Sheet: /
File: 01_FaceFollowing.kicad_sch

Title: https://github.com/Mark-MD047/expts_grove_vision_ai_v2

Size: A4	Date: 2025-10-04	**Rev:**
KiCad E.D.A. 9.0.3		Id: 1/1