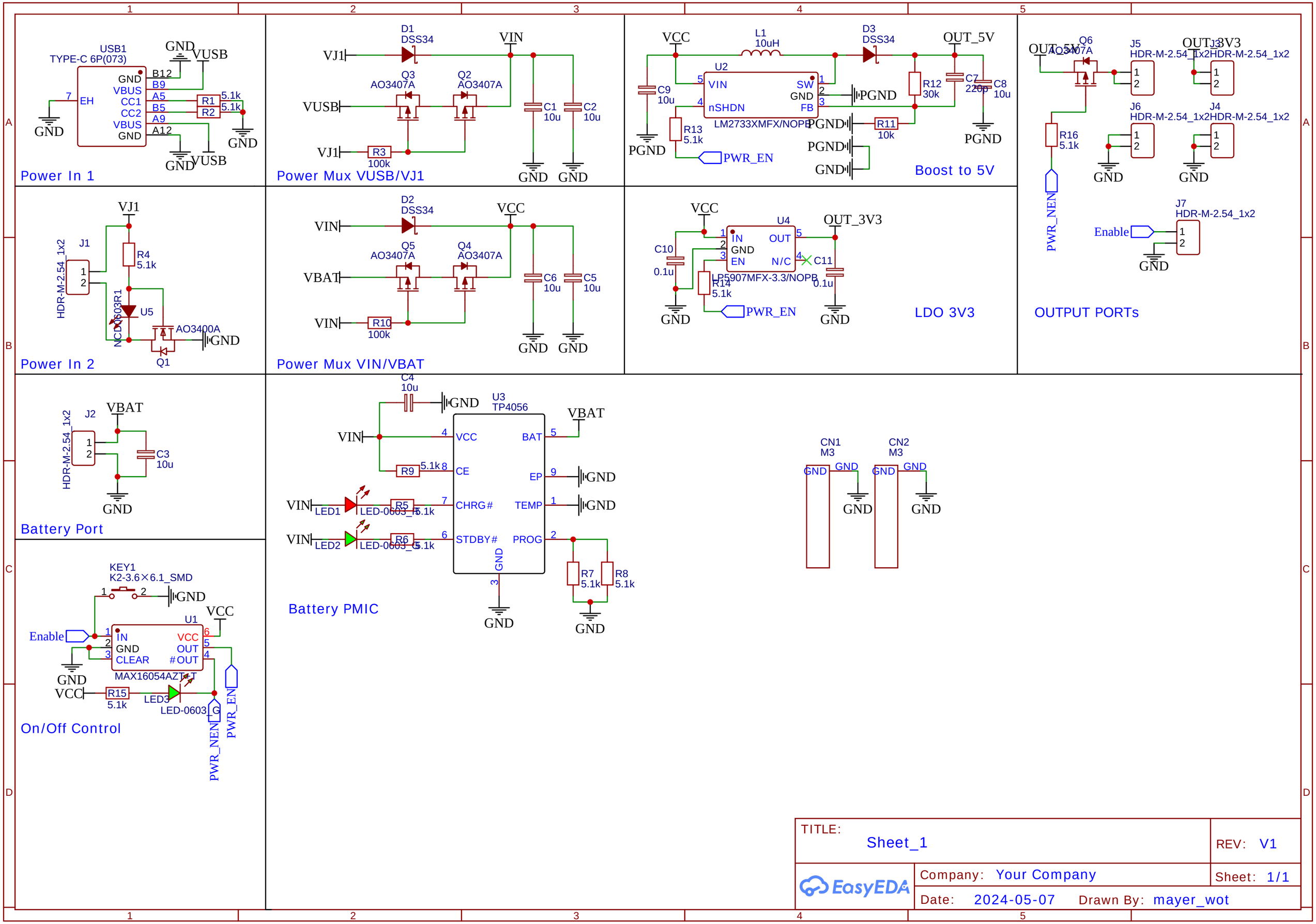

TITLE: Sheet_1	REV: V1
EasyEDA — Company: Your Company	Sheet: 1/1
Date: 2024-05-07 Drawn By: mayer_wot	