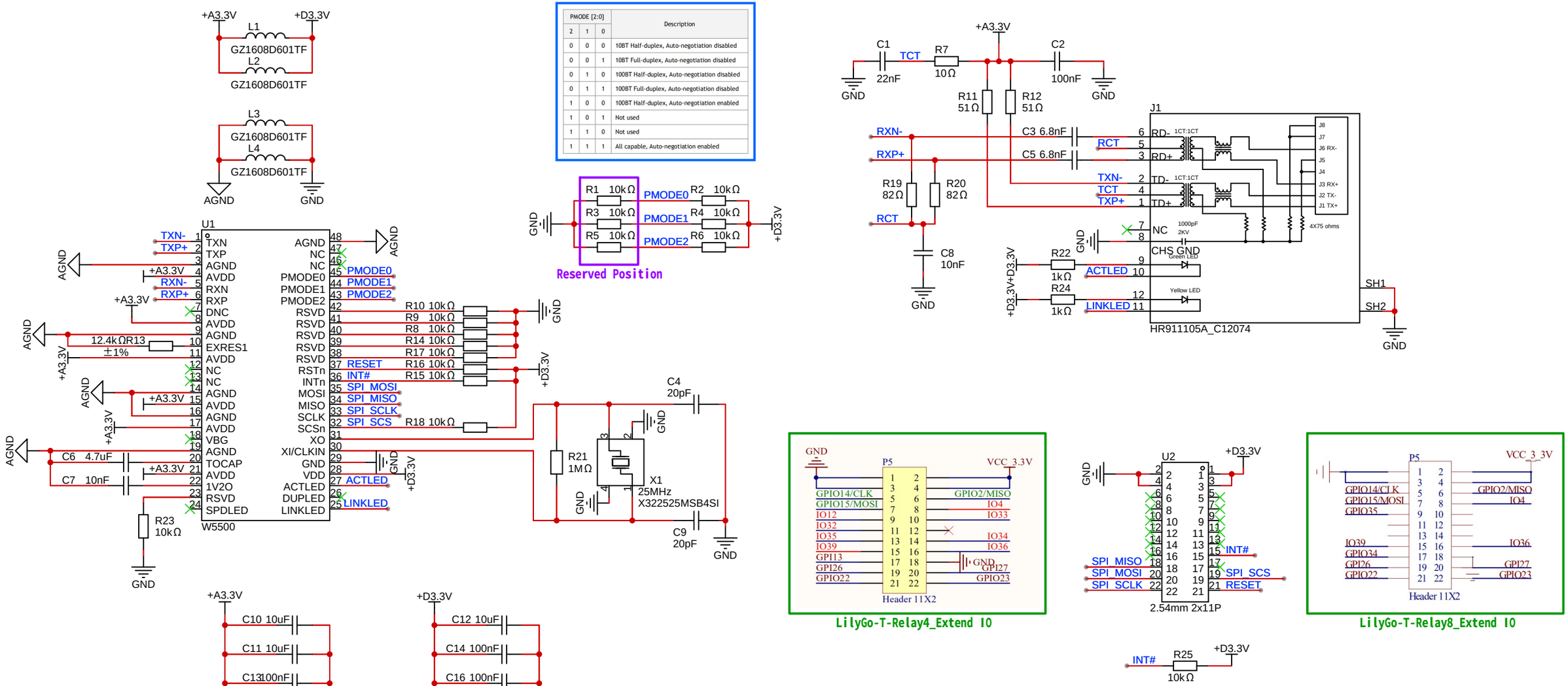

PMODE [2:0]			Description
2	1	0	
0	0	0	10BT Half-duplex, Auto-negotiation disabled
0	0	1	10BT Full-duplex, Auto-negotiation disabled
0	1	0	100BT Half-duplex, Auto-negotiation disabled
0	1	1	100BT Full-duplex, Auto-negotiation disabled
1	0	0	100BT Half-duplex, Auto-negotiation enabled
1	0	1	Not used
1	1	0	Not used
1	1	1	All capable, Auto-negotiation enabled

Title: T-W5500_Ethernet_EX

Ver: V1.0

LILYGO®

Company: LILYGO

License: GPL 3.0

Data: 2023-07-06

LastEditTime: 2023-07-19