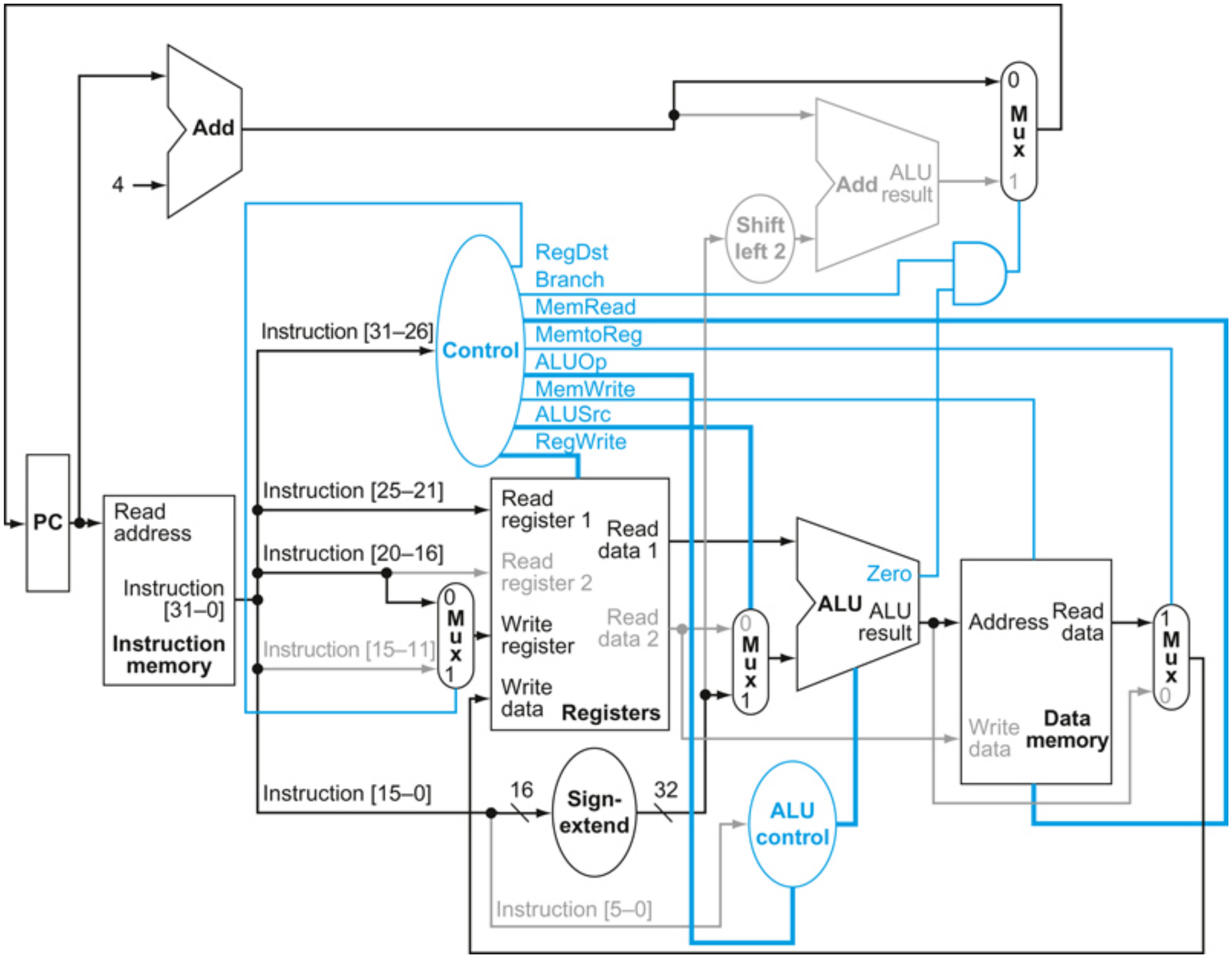

FIGURE 4.20 The datapath in operation for a load instruction. The control lines, datapath units, and connections that are active are highlighted. A store instruction would operate very similarly. The main difference would be that the memory control would indicate a write rather than a read, the second register value read would be used for the data to store, and the operation of writing the data memory value to the register file would not occur.

Copyright © 2021 Elsevier Inc. All rights reserved