bus

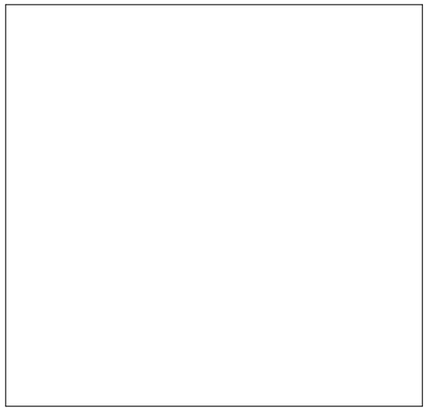

File: bus.kicad_sch

power

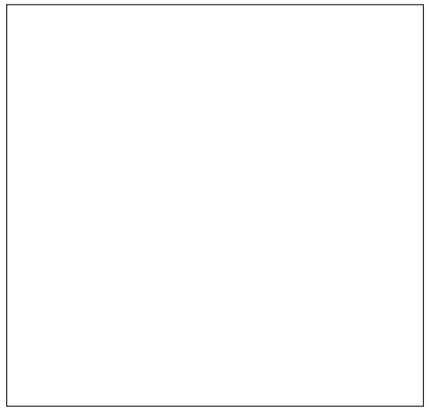

File: power.kicad_sch

buffers

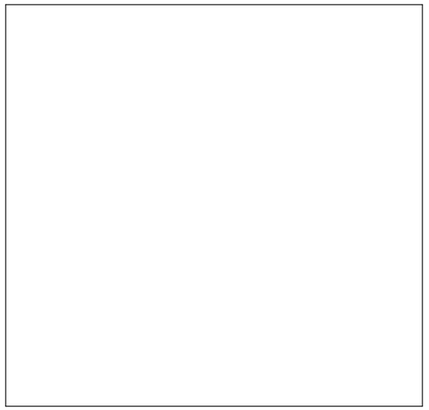

File: buffers.kicad_sch

fpanel

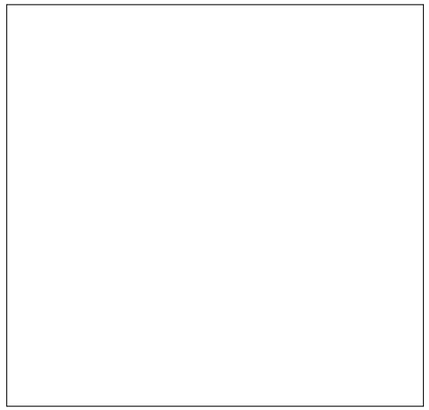

File: fpanel.kicad_sch

80C188CPU

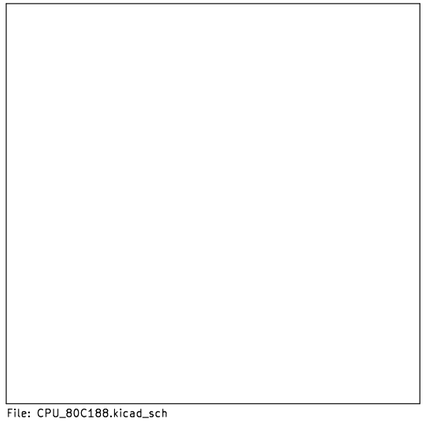

File: CPU_80C188.kicad_sch

Memory

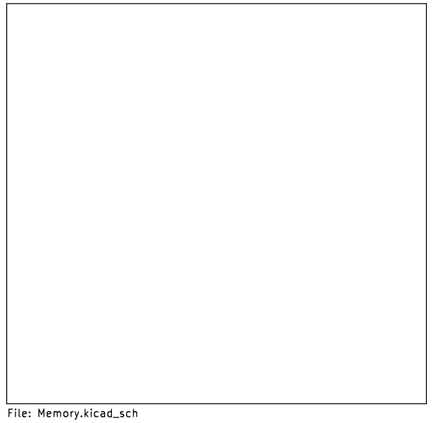

File: Memory.kicad_sch

bus sharing

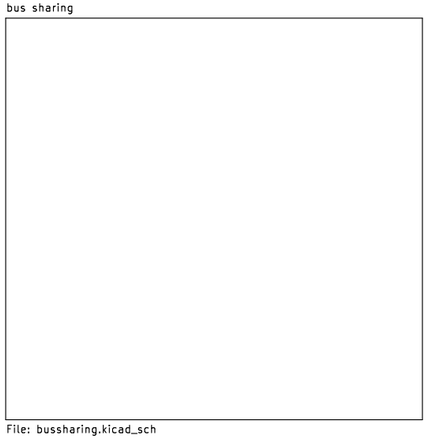

File: bussharing.kicad_sch

mapper

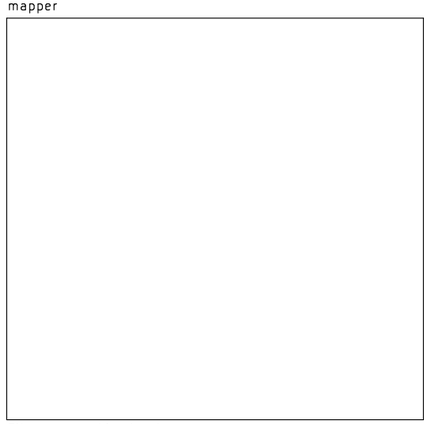

File: mapper.kicad_sch

P3
CONN_02X25

VCC	VCC	1	2	VCC		VCC
	D15	3	4	D31		
	D14	5	6	D30		
	D13	7	8	D29		
	D12	9	10	D28		
	D11	11	12	D27		
	D10	13	14	D26		
	D9	15	16	D25		
	D8	17	18	D24		
D7	D7	19	20	D23		
D6	D6	21	22	D22		
D5	D5	23	24	D21		
D4	D4	25	26	D20		
D3	D3	27	28	D19		
D2	D2	29	30	D18		
D1	D1	31	32	D17		
D0	D0	33	34	D16		
	BUSERR	35	36	UDS		
	VPA	37	38	LDS		
	VMA	39	40	S2		
	BHE	41	42	S1		
	IPL2	43	44	S0		
	IPL1	45	46	AUXCLK3		
	IPL0	47	48	AUXCLK2		
GND	GND	49	50	GND		GND

P2
CONN_02X25

VCC	VCC	1	2	VCC		VCC
A15	A15	3	4	A31		
A14	A14	5	6	A30		
A13	A13	7	8	A29		
A12	A12	9	10	A28		
A11	A11	11	12	A27		
A10	A10	13	14	A26		
A9	A9	15	16	A25		
A8	A8	17	18	A24		
+12V	+12V	19	20	+12V		+12V
A7	A7	21	22	A23		
A6	A6	23	24	A22		
A5	A5	25	26	A21		A21
A4	A4	27	28	A20		A20
A3	A3	29	30	A19		A19
A2	A2	31	32	A18		A18
A1	A1	33	34	A17		A17
A0	A0	35	36	A16		A16
-12V	-12V	37	38	-12V		-12V
	IC3	39	40	TEND1		
	IC2	41	42	DREQ1		DREQ1
	IC1	43	44	TEND0		
	IC0	45	46	DREQ0		DREQ0
	AUXCLK1	47	48	AUXCLK0		
GND	GND	49	50	GND		GND

P1
CONN_02X25

VCC	VCC	1	2	VCC		VCC
RD	RD	3	4	E		
WR	WR	5	6	ST		
IORQ	IORQ	7	8	PHI		
MREQ	MREQ	9	10	INT2		
M1	M1	11	12	INT1		
BUSACK	BUSACK	13	14	CRUCLK		
bCLK	bCLK	15	16	CRUOUT		
		17	18	CRUIN		
NMI	NMI	19	20	RES_IN		RES_IN
RES_OUT	RES_OUT	21	22	USER8		
BUSRQ	BUSRQ	23	24	USER7		
WAIT	WAIT	25	26	USER6		
HALT	HALT	27	28	USER5		
RFSH	RFSH	29	30	USER4		
EIRQ7	EIRQ7	31	32	USER3		
EIRQ6	EIRQ6	33	34	USER2		
EIRQ5	EIRQ5	35	36	USER1		
EIRQ4	EIRQ4	37	38	USER0		
EIRQ3	EIRQ3	39	40			
EIRQ2	EIRQ2	41	42			
EIRQ1	EIRQ1	43	44			
EIRQ0	EIRQ0	45	46			
I2C_SCL	I2C_SCL	47	48	I2C_SDA		I2C_SDA
	GND	49	50	GND		GND

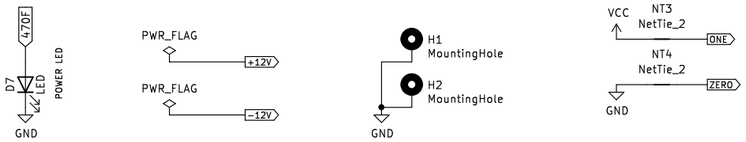
470F
D7
LED
POWER LED
GND
PWR_FLAG
+12V
PWR_FLAG
-12V
H1
MountingHole
H2
MountingHole
GND
VCC
NT3
NetTie_2
ONE
NT4
NetTie_2
ZERO
GND

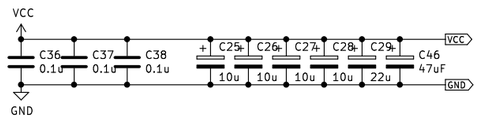
VCC
C36
0.1u
C37
0.1u
C38
0.1u
C25
10u
C26
10u
C27
10u
C28
10u
C29
22u
C46
47uF
VCC
GND
GND

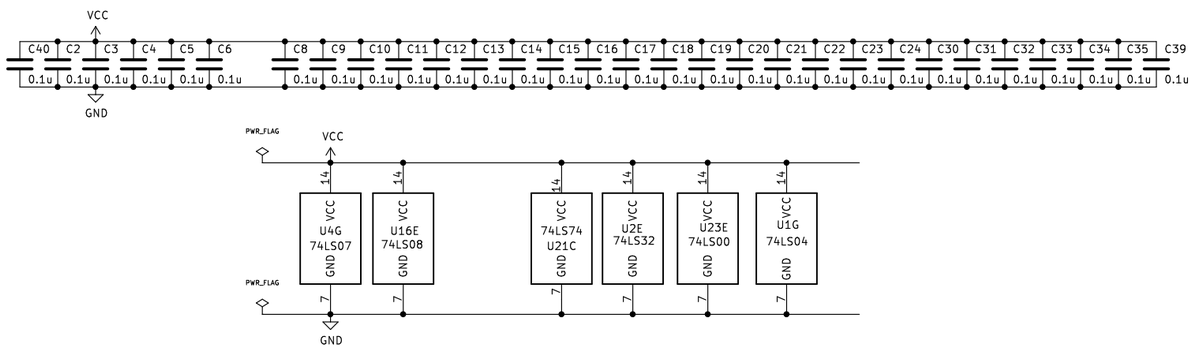
VCC
C40 C2 C3 C4 C5 C6 C8 C9 C10 C11 C12 C13 C14 C15 C16 C17 C18 C19 C20 C21 C22 C23 C24 C30 C31 C32 C33 C34 C35 C39
0.1u 0.1u 0.1u 0.1u 0.1u 0.1u 0.1u 0.1u 0.1u 0.1u 0.1u 0.1u 0.1u 0.1u 0.1u 0.1u 0.1u 0.1u 0.1u 0.1u 0.1u 0.1u 0.1u 0.1u 0.1u 0.1u 0.1u 0.1u 0.1u 0.1u 0.1u 0.1u 0.1u
GND
PWR_FLAG
VCC
U4G
74LS07
U16E
74LS08
74LS74
U21C
U2E
74LS32
U23E
74LS00
U1G
74LS04
GND

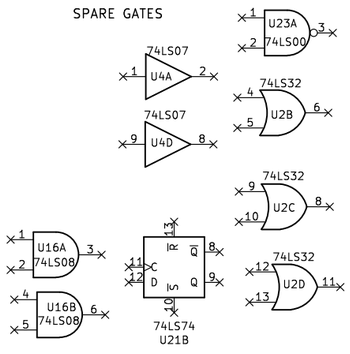
SPARE GATES
U23A
74LS00
74LS07
U4A
74LS32
U2B
74LS07
U4D
74LS32
U2C
U16A
74LS08
U16B
74LS08
74LS74
U21B
74LS32
U2D

Z80 BUS INTERFACE

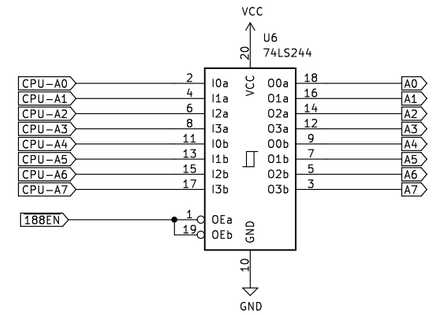

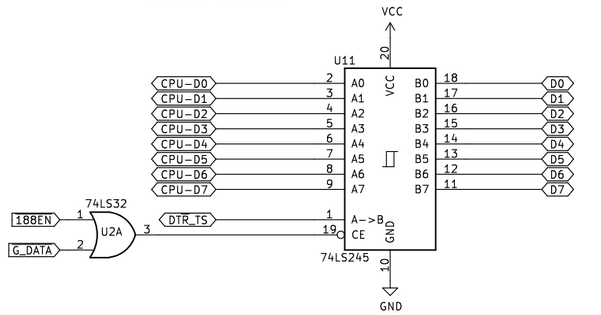

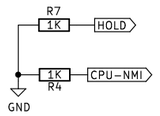

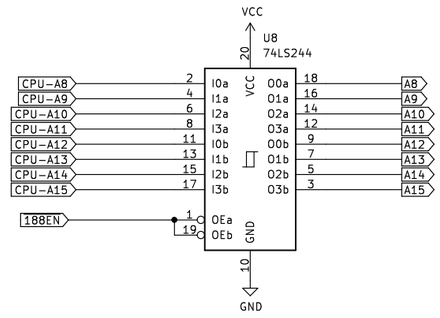

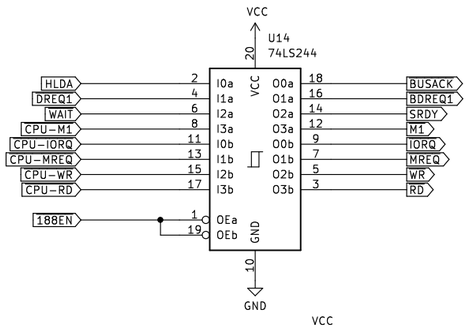

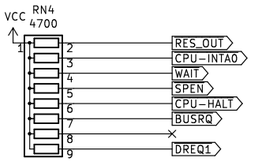

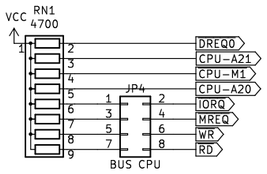

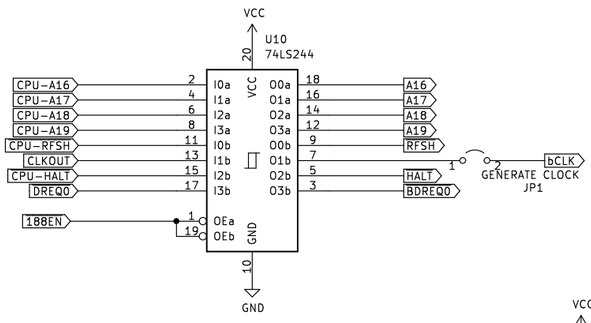

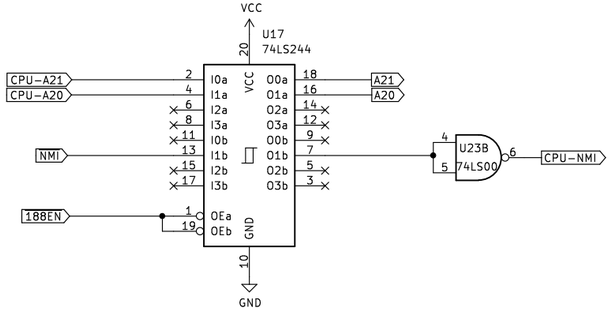

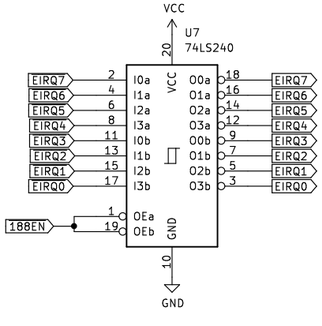

FRONT PANEL LED OUTPUT

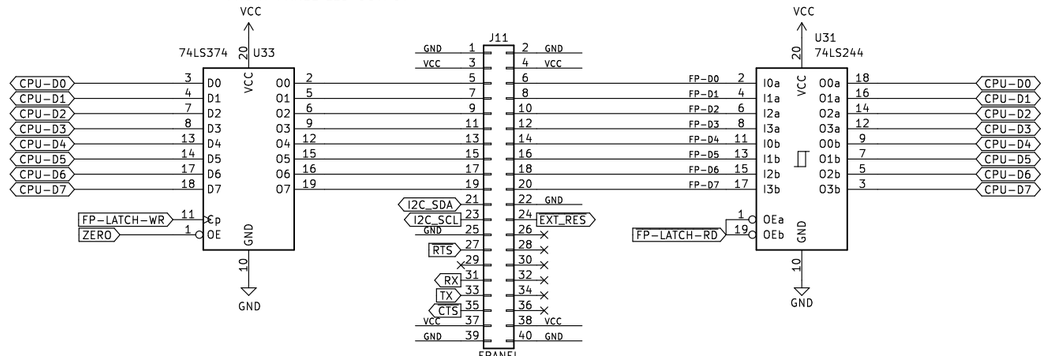

U33 NOTE: USE 74HCT374 TO SOURCE OR SINK ADEQUATE CURRENT TO DRIVE LEDS ON FRONT PANEL

J11 NOTE:

PINS 5, 7, 9, 11, 13, 15, 17, 19 ARE FOR LED STATUS FOR ROMWBW FRONT PANEL INDICATOR

PINS 6, 8, 10, 12, 14, 16, 18, 20 ARE FOR SWITCH INPUTS FOR ROMWBW FRONT PANEL

PINS 21, 23 ARE FOR I2C CONNECTION (SDA & SCL)

PINS 25, 27, 29, 31, 33, AND 35 ARE FOR TTL SERIAL CONNECTOR TO UART

PINS 22, 24 ARE FOR EXTERNAL RESET SWITCH

FRONT PANEL SWITCH INPUT

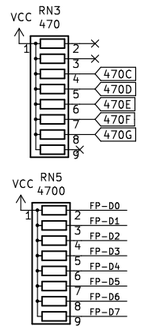

Note: IO Address Port $96
1–2 =off – A7 (high)
3–4 =on – A6 (low)
5–6 =on – A5 (low)
7–8 =off – A4 (high)
9–10 =on – A3 (low)
11–12 =off – A2 (high)
13–14 =off – A1 (high)
15–16 =on – A0 (low)

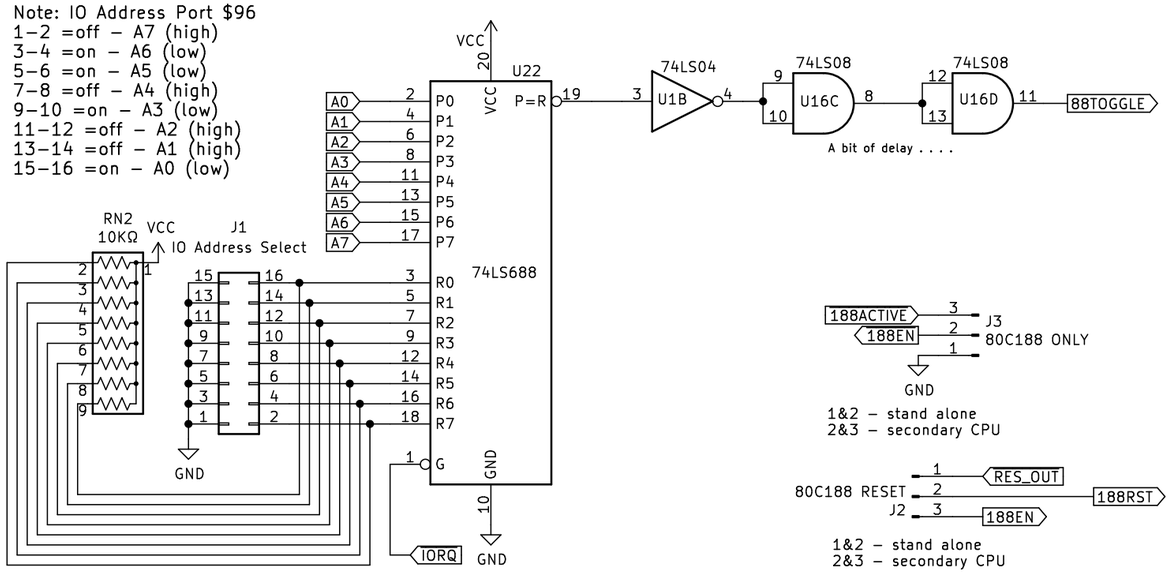

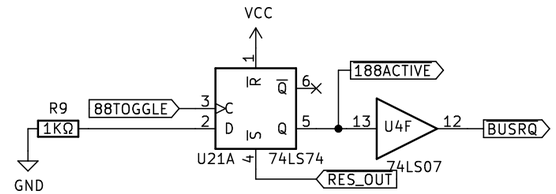

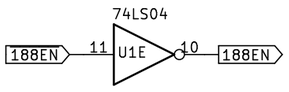

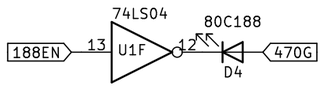

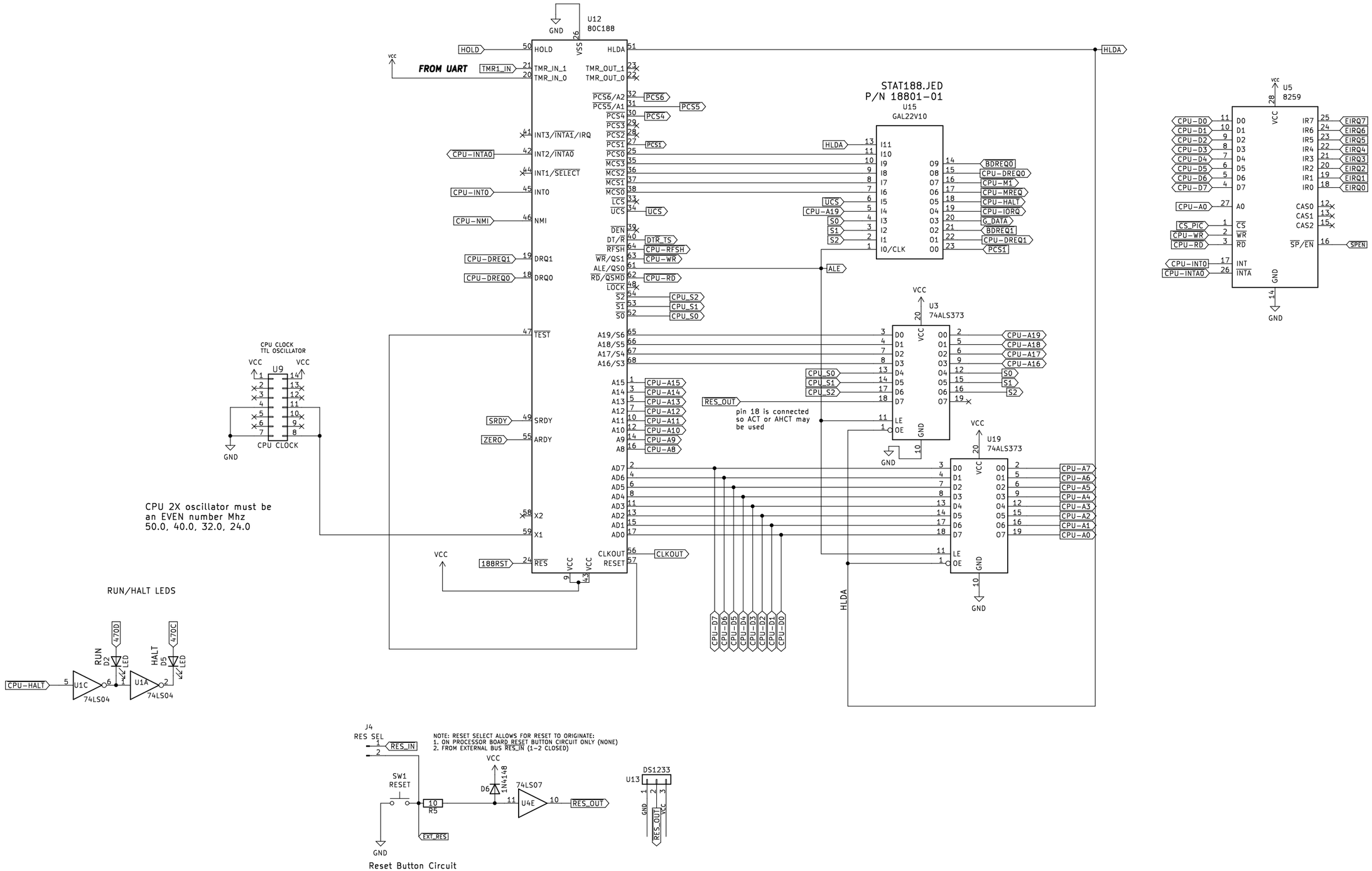
U12
80C188
FROM UART
STAT188.JED
P/N 18801-01
U15
GAL22V10
U5
8259
U3
74ALS373
U19
74ALS373
CPU CLOCK
TTL OSCILLATOR
U9
CPU CLOCK
CPU 2X oscillator must be
an EVEN number Mhz
50.0, 40.0, 32.0, 24.0
pin 18 is connected
so ACT or AHCT may
be used
RUN/HALT LEDS
U1C
74LS04
U1A
74LS04
J4
RES SEL
NOTE: RESET SELECT ALLOWS FOR RESET TO ORIGINATE:
1. ON PROCESSOR BOARD RESET BUTTON CIRCUIT ONLY (NONE)
2. FROM EXTERNAL BUS RES_IN (1-2 CLOSED)
SW1
RESET
74LS07
U4E
DS1233
U13
Reset Button Circuit

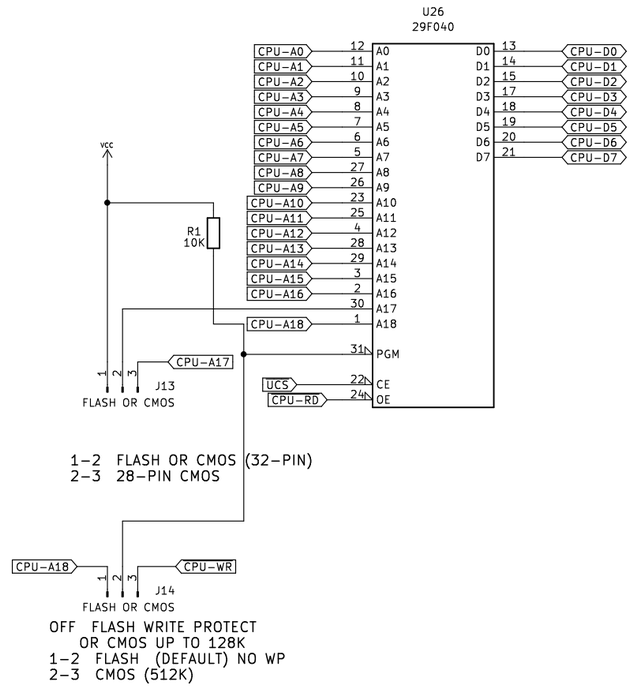

ROM

FLASH 39SF010 (128K)
ALTERNATES: 39SF020, 29F020, 29F010
39SF040, 29F040 (512K) NOT RECOMMENDED

CMOS 27C010 (128K, 32pin)
ALTERNATE 27C020
28pin: 27C512(64K), 27C256(32K)

DEFAULT CHIP: 39SF010 (128K FLASH)
DEFAULT JUMPERS: 1–2, 1–2 (BOTH)

29F040 SHOWS ALL PIN ASSIGNMENTS

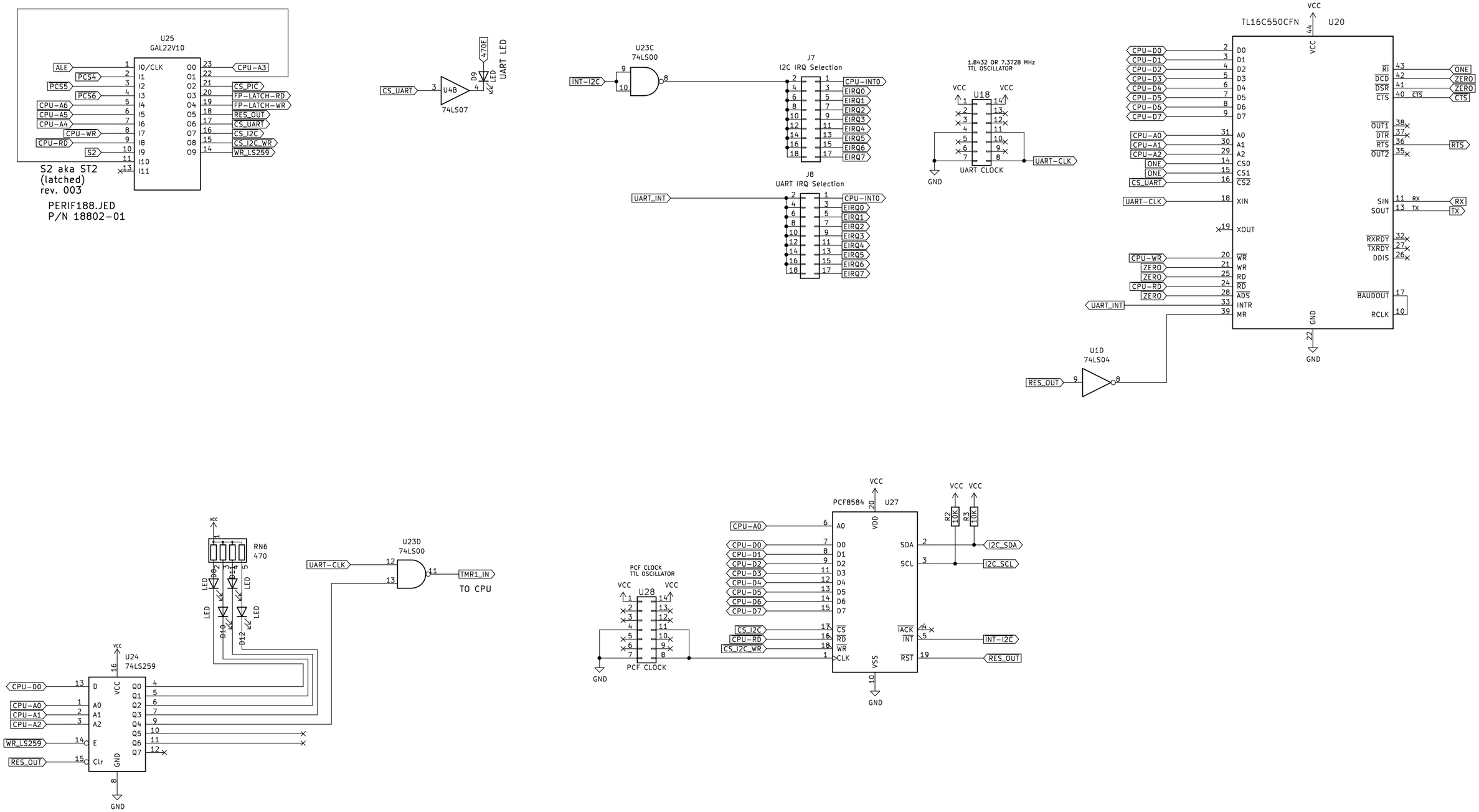
U25
GAL22V10
S2 aka ST2
(latched)
rev. 003
PERIF188.JED
P/N 18802-01
U4B
74LS07
UART LED
U23C
74LS00
J7
I2C IRQ Selection
J8
UART IRQ Selection
1.8432 OR 7.3728 MHz
TTL OSCILLATOR
U18
UART CLOCK
TL16C550CFN
U20
U1D
74LS04
RN6
470
U23D
74LS00
TO CPU
U24
74LS259
PCF CLOCK
TTL OSCILLATOR
U28
PCF CLOCK
PCF8584
U27