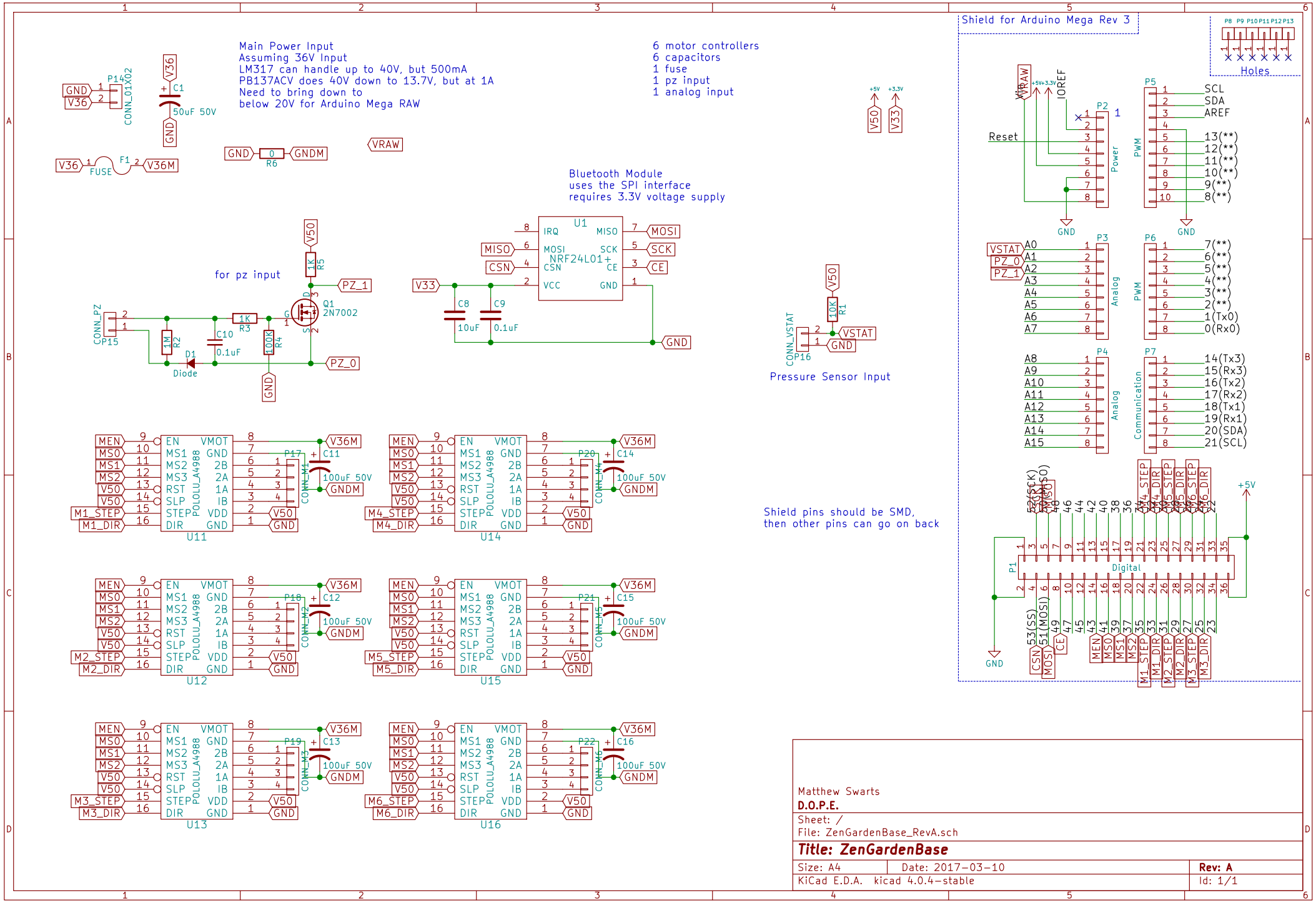
Main Power Input
Assuming 36V Input
LM317 can handle up to 40V, but 500mA
PB137ACV does 40V down to 13.7V, but at 1A
Need to bring down to
below 20V for Arduino Mega RAW
6 motor controllers
6 capacitors
1 fuse
1 pz input
1 analog input
Bluetooth Module
uses the SPI interface
requires 3.3V voltage supply
for pz input
Pressure Sensor Input
Shield pins should be SMD,
then other pins can go on back
Shield for Arduino Mega Rev 3
Holes
Reset
Power
Analog
Digital
Communication
PWM
U1
NRF24L01+
Q1
2N7002
Diode
POLOLU_A4988
U11
U12
U13
U14
U15
U16
Matthew Swarts
D.O.P.E.
Sheet: /
File: ZenGardenBase_RevA.sch
Title: ZenGardenBase
Size: A4
Date: 2017-03-10
Rev: A
KiCad E.D.A. kicad 4.0.4-stable
Id: 1/1