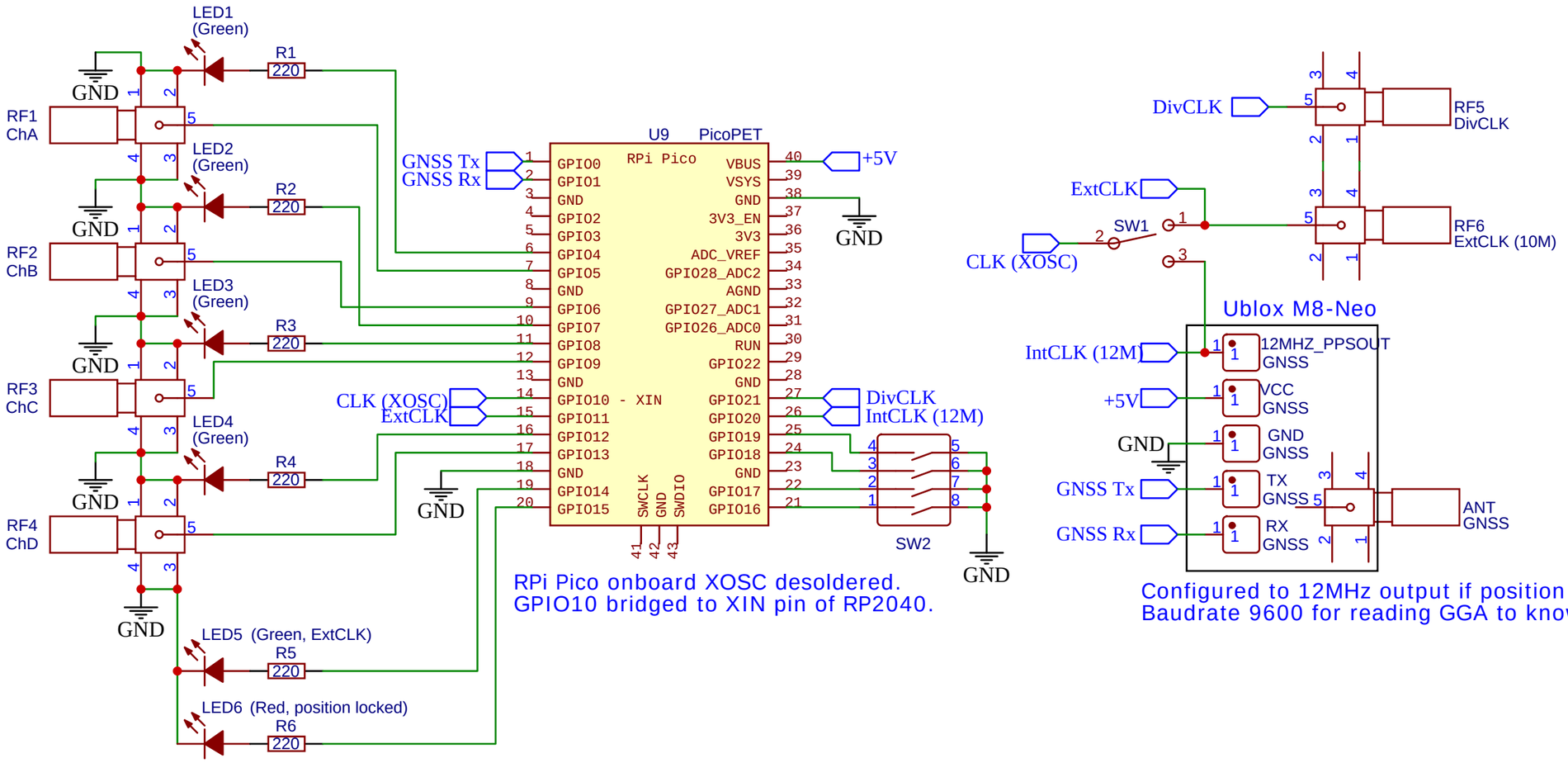

RPi Pico onboard XOSC desoldered.
GPIO10 bridged to XIN pin of RP2040.

Configured to 12MHz output if position locked or not.
Baudrate 9600 for reading GGA to know if position locked.

TITLE: PicoPET (Hammond casing)		REV: 1.0
EasyEDA	Company: Rarach Time	Sheet: 1/1
	Date: 2021-11-14 Drawn By: .md	