Emotibot

HRI ‘24 Student Design Challenge

Official Documentation

Social, Therapeutic, & Robotic Systems (STaRS) Lab
Mississippi State University

Last Updated: 05/13/2025, JT

Table of Contents:

Overview 2
Fabrication 3
Hardware 5
Full Assembly 6
Usage 8
Codebase 12
References 13

Overview

Emotibot was designed to portray emotion using multi-modal communication. This tool elicits engagement from users and changes its portrayed state based on user presence and interactions. Emotional state is portrayed using colored flashing cheeks, variously pitched “animalese” vocalizations [1], and changes in speed of a simulated heartbeat vibration.

This system consists of three main objects: two user-facing creatures and a companion base object. Each of the two creatures possesses a different simulated personality, so they respond differently to the same stimuli (being approached, picked up, etc.).

The Emotibot system.

The taller creature exhibits an outgoing personality. It expresses a sad emotional state when no motion or approaching user is detected. When it detects motion or user presence, it shifts to a happy emotional state.

The shorter creature exhibits an introverted personality. It expresses a happy emotional state when no motion or approaching user is detected. When it detects motion or user presence, it shifts to an anxious emotional state.

This project was developed as part of the Student Design Challenge for the 2024 HRI Conference. The short paper and demonstration video for this project can be found at https://dl.acm.org/doi/10.1145/3610978.3641265.

Fabrication

The creature coverings were crocheted by hand, using two colors of yarn. Plastic safety eyes are attached to the covering, and padding inserts were made according to the approximate size of the coverings. Padding inserts for the creatures are made in a way that accommodates a thin pocket for the internal hardware components to be placed inside.

Heating issues can be a concern when using tight-fitting padding inserts, but the components have proved to produce negligible heat in our (not extensive) testing.

The Raspberry Pi within the crocheted house, however, produces much more heat than the components within the creatures. As a solution, we currently do not produce padding to go on top of the Raspberry Pi, and only create a cushion to be placed beneath it. It is mainly used to shape the house itself and is not substantially dense, as users are not intended to engage directly with the house.

The crochet pattern for the two creatures can be found here. A pattern for the crocheted house, as well as guidance on creating padding inserts for the creatures and house are in progress.

Hardware

Creatures

The tall and short creatures use identical hardware components. Each creature is equipped with a NodeMCU ESP-WROOM-32 microcontroller, an Adafruit DRV2605L haptic driver breakout board, an Adafruit mini vibration motor, a BNO055 IMU breakout board, a strand of 4 RGBW NeoPixel lights, and a mini Bluetooth speaker. Each creature is powered by a rechargeable lithium polymer battery. The creatures' onboard microcontrollers power most of their modalities (light and heartbeat vibration), monitor motion data from the IMU, and handle communication from the base object.

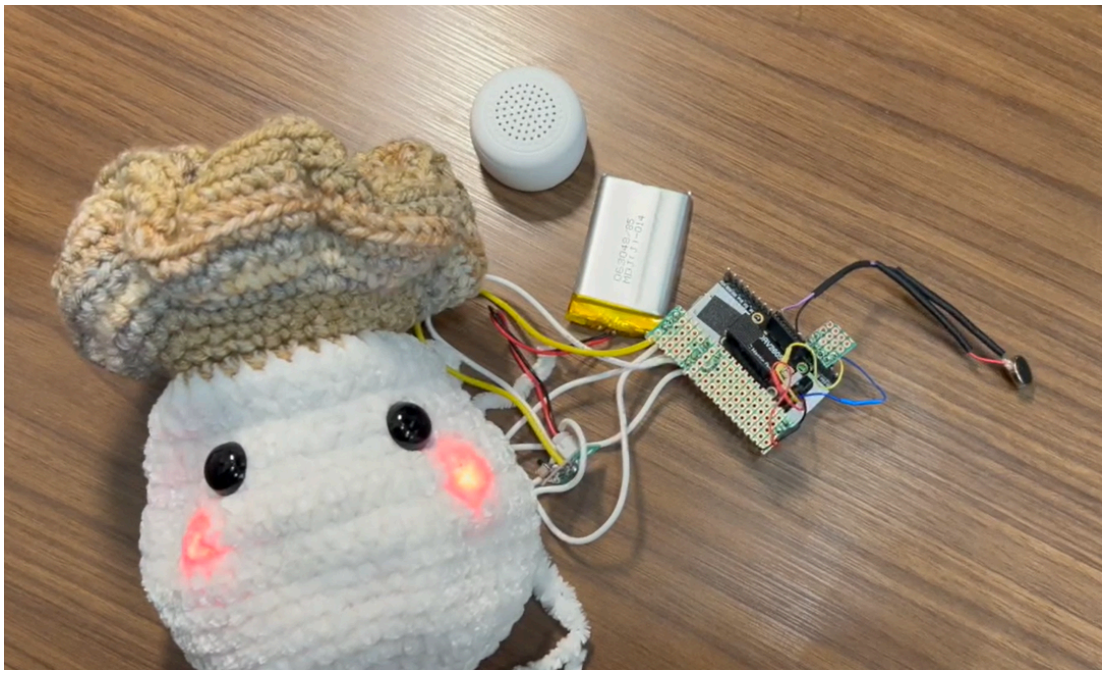

Base Object

The base object hardware consists of an ultrasonic sensor and a Raspberry Pi 3. Currently, the base object is powered using a PiSugar portable battery, but it can also be plugged into either a wall outlet or other portable power source. The Raspberry Pi is responsible for parsing ultrasonic sensor data and communicating changes in user presence to the two creatures. Additionally, audio generation for the two creatures takes place on the Raspberry Pi, which is connected to each creature's Bluetooth speaker. General communication to the creatures' microcontrollers also takes place over Bluetooth connection.

Full Assembly

Zipper Attachment

In our initial prototype, we laced up the creatures using an extra piece of yarn and the crochet stitch gaps closest to the back. This proved to cause the edges of the covering to wear down from repeated tying and retying. This method for closing the creatures was also incredibly time consuming and not very appealing.

For the second and current prototype of the creatures, we hand-sewed a zipper into the back of the creatures to allow for easy closing and reopening of the creature while testing and developing.

Small bean bags (here, used as weights) are also inserted into the bottom of each crochet covering to help the creatures stand up easily.

NeoPixel Attachment

Currently, the NeoPixel strips in each creature are taped or otherwise adhered directly to the crocheted covering from the inside, before the padding is inserted.

In the future, we would greatly prefer to permanently sew the NeoPixels into the covering (potentially using the singular variant of the lights and capacitive thread, or some similar setup) or otherwise affix them in a more secure manner.

Hardware

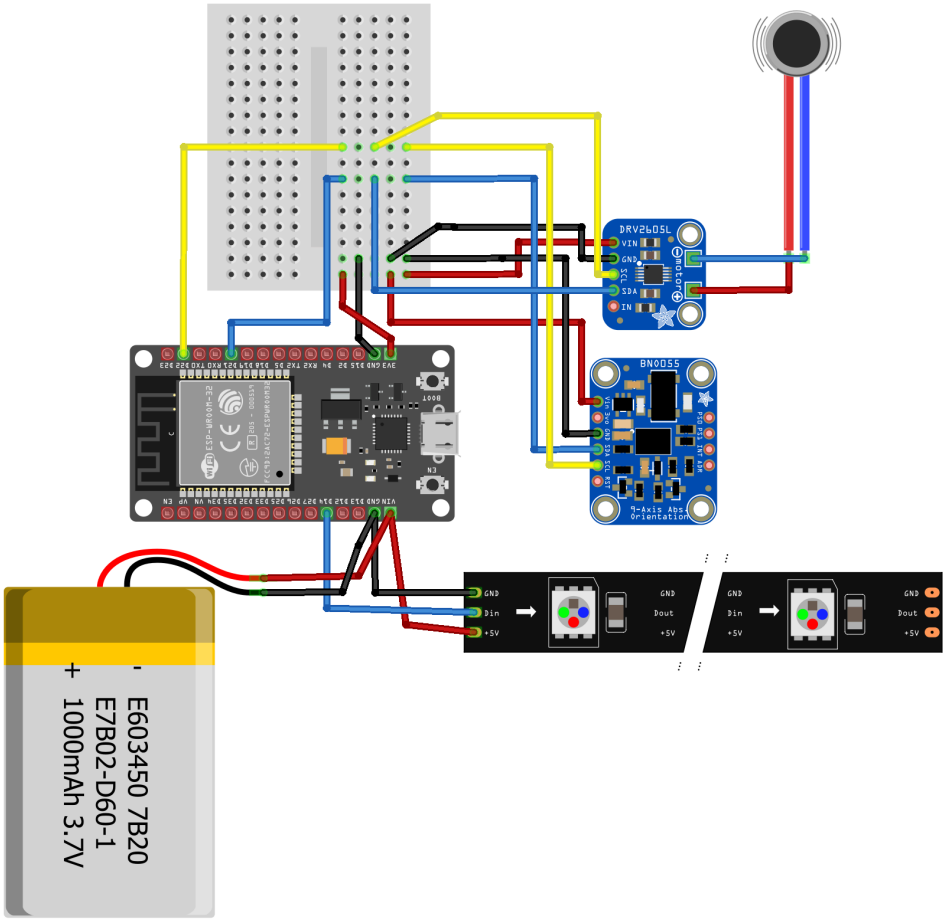

PCB proto-board was cut and used to connect adjacent pins to outgoing wires, and female headers were added in a way that these proto-board pieces could be plugged into male headers on the ESP board. Unused male headers on the ESP were desoldered and Kapton tape was placed over sharp edges and parts of the boards that could touch while inside the covering.

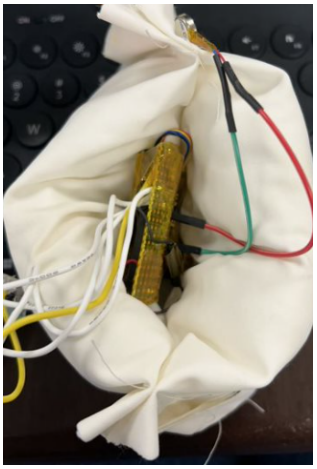
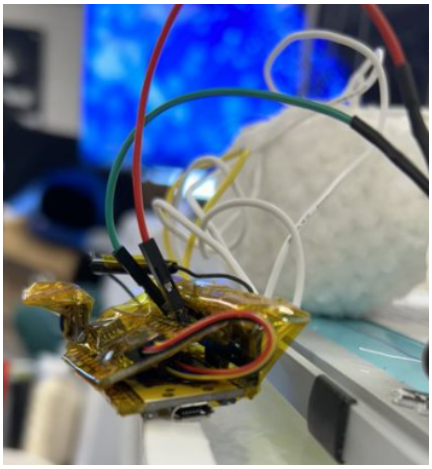
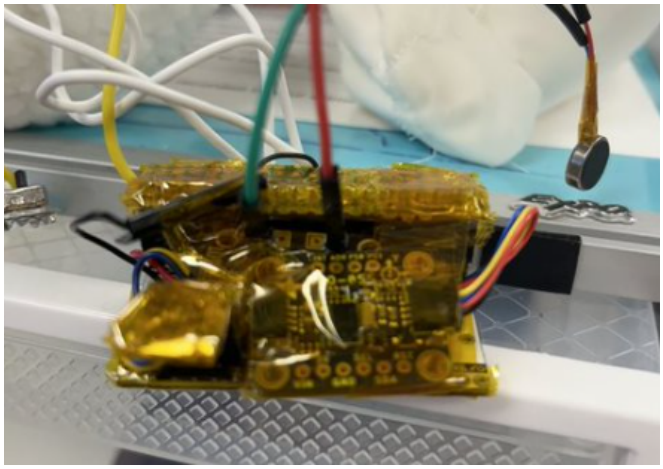

Usage

Turning On Emotibot

In the system's current state, a few components must be turned on and allowed to set up in a particular order for boot up to occur properly.

1. **Turn on Bluetooth speakers.**

   Turn on each Bluetooth speaker separately by holding down the power button. The speaker's light indicator should turn on and blink blue, and it should make a startup noise (three notes ascending).

2. **Connect Bluetooth speakers to each other.**

   If the speakers have been paired together before, it is possible that they may pair together automatically. You will know when this pairing occurs when an additional noise is made by one or both of the speakers (this will be different than the startup sound, one note) and one of the speaker's indicator lights changes from a blink to a constant light.

   To pair the speakers manually, double-click the power button on one of the speakers. You should hear a noise (one note) and one of the speaker's indicator lights should stop blinking. After the speakers are on and connected, you may gently place them into the back area of the coverings through the zipper opening.

3. **Turn on creatures (power switch for ESPs and boards).**

   Locate the power switch in each creature (see image below). Ensure that a charged battery is properly connected to the plug next to the power switch, then turn the switch to the ON position. Gently nestle the switch inside the covering near the zipper opening, then close the zipper.

   Note that the next step should be completed somewhat timely, as the speakers may automatically turn off after several minutes if they are left idle.

4. **Turn on Raspberry Pi.**

   Connect power to the Raspberry Pi using your power source of choice. Turning on the Raspberry Pi will automatically run a series of bash scripts that initialize Bluetooth connection to both the speaker set and each creature's individual ESP microcontroller. This startup will take approximately 1 minute to execute fully.

   You should hear yet another noise from the speakers once the speaker Bluetooth connection is successful. There is no explicit indicator for the ESP connection.

Turning Off Emotibot

The creatures themselves can be safely powered down at any time by switching their power switches to the OFF position. The speakers must be individually powered down by holding down their respective power buttons until a sound is heard (two notes descending).

There are a couple of ways to properly shut off the Raspberry Pi: using PiSugar's custom button, or manually shutting down through ssh connection.

See this documentation for steps on accessing the PiSugar power management interface, which can be done any time the Raspberry Pi is powered on. The current system utilizes a PiSugar configuration to send a shutdown signal upon a custom button press (we used Double Tap), which allows the computer to end processes properly before power is cut. We found that this worked best when selecting the "Custom Shell" action for the Double Tap option, and manually putting in a command that shuts down the system. Note that this command should have something arbitrary concatenated to it besides `shutdown`, as the interface picks up on the command and switches it to the "Shutdown" action automatically. Using this configuration, you can send a shutdown signal and turn off power within a few seconds by double-clicking the "custom" button on the side of the PiSugar board (on the left side in the picture below, farthest from the battery level lights).

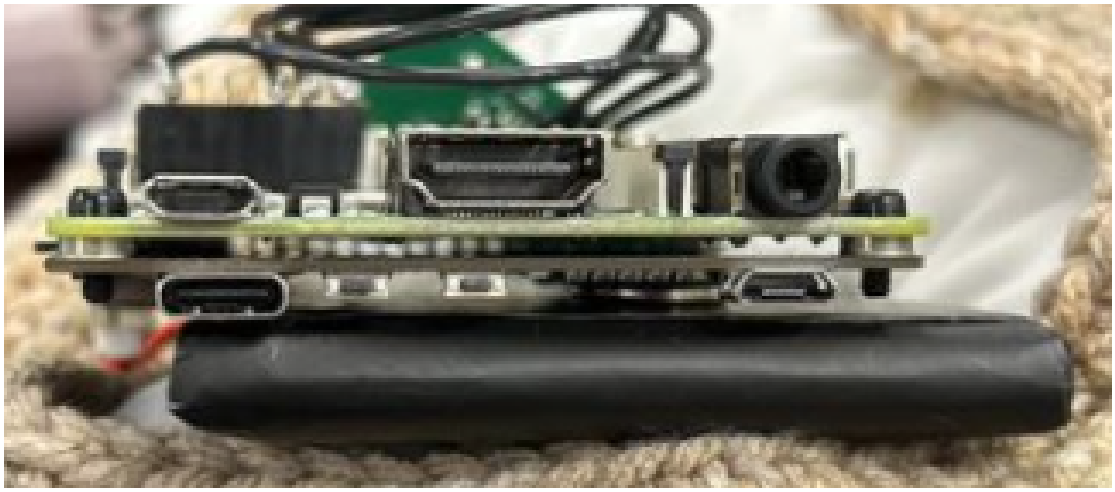

Alternatively, you can ssh into the Raspberry Pi and execute a simple `sudo shutdown now` command to end processes and wireless connections.

Codebase

The codebase for this project, which includes code and scripts to be loaded onto the Raspberry Pi and microcontroller components, can be found at https://github.com/jadethomp/Emotibot (Accessed 5/13/25).

References

[1] https://github.com/equalo-official/animalese-generator/