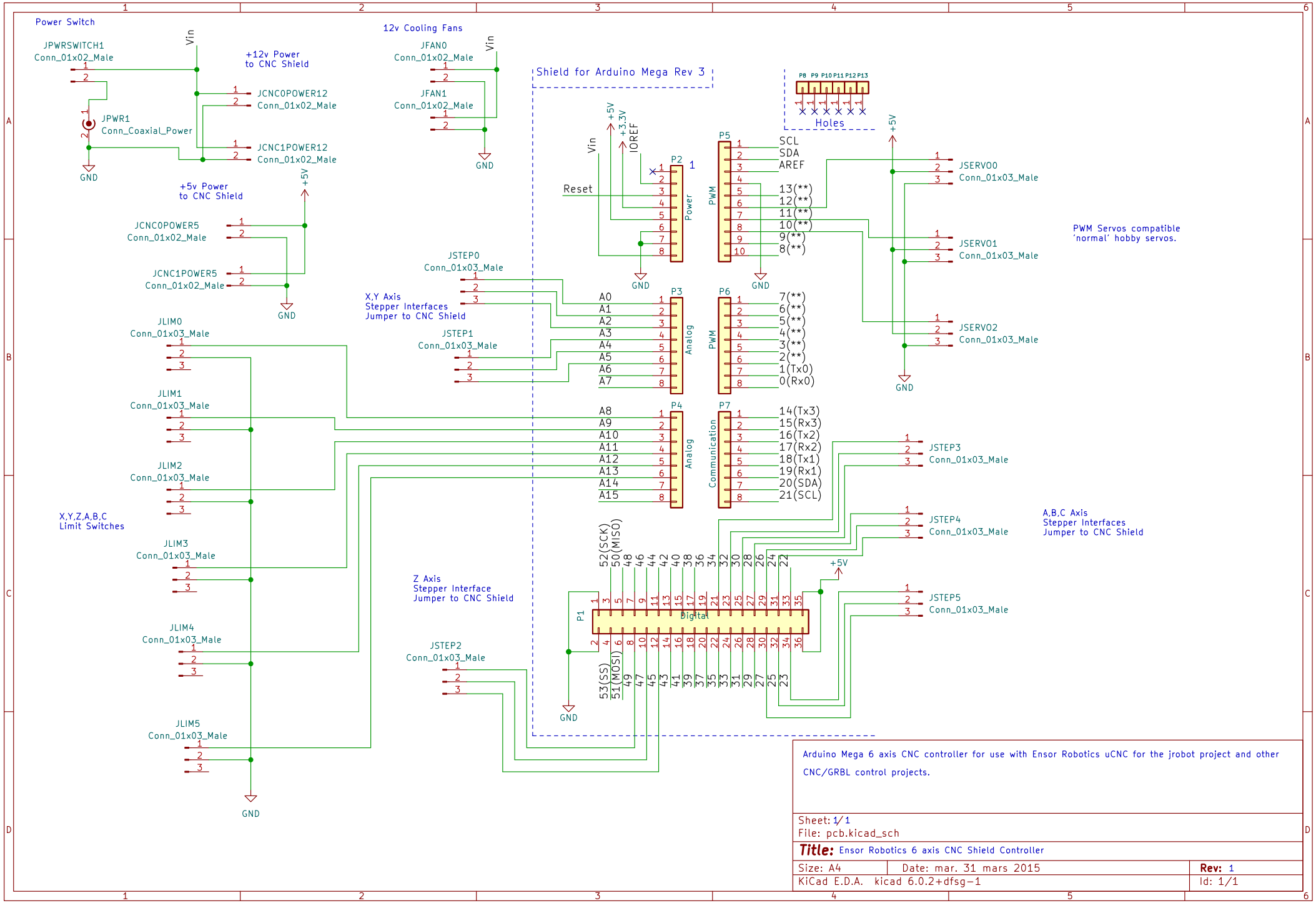

Arduino Mega 6 axis CNC controller for use with Ensor Robotics uCNC for the jrobot project and other CNC/GRBL control projects.

Sheet: 1/1
File: pcb.kicad_sch

Title: Ensor Robotics 6 axis CNC Shield Controller

Size: A4	Date: mar. 31 mars 2015	**Rev:** 1
KiCad E.D.A. kicad 6.0.2+dfsg-1		Id: 1/1