Service Manual Supplement

3000GT SPYDER

1995 Volume 3

FOREWORD

This Service Manual Supplement has been prepared with the latest service information available at the time of publication. It is subdivided into various service groups that are unique to the retractable hardtop. Each section may contain one or more of the following: diagnosis, disassembly, repair, installation procedures, specifications, and tightening references. Service groups that are not specific to the retractable hardtop can be found in Volumes 1 & 2. Use of this manual will aid in properly performing any servicing necessary to maintain or restore the high levels of performance and reliability designed into these outstanding vehicles.

Mitsubishi Motors Corporation and Mitsubishi Motor Sales of America, Inc. reserve the right to make changes in design or to make additions to or improvements in its products without imposing any obligations upon itself to install them on its products previously manufactured.

© 1995 Mitsubishi Motor Sales of America, Inc. Printed in U.S.A.

MSSP-101B-95

GROUP INDEX

General 00
Electronic Control Suspension (ECS) 33B
Service Brakes 35
Body 42
Exterior 51
Interior 52
Chassis Electrical 54
Heater, Air Conditioning and Ventilation 55
Alphabetical Index ..... [redacted]
Quick Reference Chart ..... [redacted]
Hatchback-To-Convertible Wiring Harness Connector Changes

WARNINGS REGARDING SERVICING OF SUPPLEMENTAL RESTRAINT SYSTEM (SRS) EQUIPPED VEHICLES

WARNING!

(1) Improper service or maintenance of any component of the SRS, or any SRS-related component, can lead to personal injury or death to service personnel (from inadvertent firing of the air bag) or to the driver (from rendering the SRS inoperative).

(2) If it is possible that the SRS components are subjected to heat over 93°C (200°F) in baking or in drying after painting, remove the SRS components (air bag module, SRS diagnosis unit, front impact sensors) beforehand.

(3) Service or maintenance of any SRS component or SRS-related component must be performed only at an authorized MITSUBISHI dealer.

(4) MITSUBISHI dealer personnel must thoroughly review this manual, and especially its GROUP 52B – Supplemental Restraint System (SRS) and GROUP 00 – Maintenance Service in Volume 1, before beginning any service or maintenance of any component of the SRS or any SRS-related component.

NOTE

Section titles with asterisks (*) in the table of contents in each group indicate operations requiring warnings.

GENERAL

CONTENTS

GENERAL DATA AND SPECIFICATIONS 28
GENERAL INFORMATION ABOUT THE RETRACTABLE HARDTOP SYSTEM 7
HOMELINK™ UNIVERSAL TRANSMITTER .. 22
INTRODUCTION 2
LUBRICATION AND MAINTENANCE 29
PRECAUTIONS BEFORE SERVICE 27
QUICK TROUBLESHOOTING GUIDE HARD TONNEAU 11
QUICK TROUBLESHOOTING GUIDE HARDTOP AND HARD TONNEAU..... 14
RECOMMENDED LUBRICANTS AND LUBRICANT CAPACITIES 30
SPARE TIRE, JACK AND TOOL SET STORAGE 22
SPYDER CLEANING RECOMMENDATIONS.. 21
VEHICLE IDENTIFICATION 5
VEHICLE WASHING 22

GENERAL INFORMATION

INTRODUCTION

The addition of a retractable hardtop feature creates changes to several other systems and components. These changes are summarized below. Detailed information can be found on the reference pages.

GROUP #	GROUP DESCRIPTION	CHANGE SUMMARY
33	Front Suspension	• Spyder-unique coil spring rate
33B	Electronic Control Suspension (ECS)	• Relocation of ECS control unit • Wiring harness changes • Coupe's ECS control unit mounting bracket modified to accommodate Spyder • Available modified as a service part
34	Rear Suspension	• Spyder-unique coil spring rate
35	Service Brakes	• Relocated ABS electronic control unit • ECU must be removed to perform system diagnostics • Spyder-unique proportioning valve
42	Body	Body Structure: • Incorporation of additional body strengthening components • Major body modifications
		Doors: • Spyder-unique due to strengthening components • Hole must be drilled in new service part to accept wire harness
		Door Windows: • Incorporate "Express-Down" feature when operating retractable hardtop • Automatic raising feature when pressing and holding retractable hardtop "CLOSE" switch • Operates normally using switches when not operating hardtop • Wiring harness changes • Drivers and passenger side window has 2 additional relays • Passenger side is controlled through hardtop ECU
		Front Fenders: • Spyder-unique • Lower portion modified to accommodate additional lower A-pillar structure • Lower mounting changed • RH fender has hole for mounting motor antenna
		Hardtop "CLOSE"/"OPEN" and hard tonneau "CLOSE"/"OPEN" switch replace Active Aero switch in center console
		Hard Tonneau: • Hard tonneau replaces liftgate • Forward opening, rear hinged • Powered by electro-hydraulic system • Driver's liftgate release lever is used for hard tonneau manual release • Twin, cable-actuated, gear motor-released latches with integrated limit switches • Tonneau hinge-mounted hardtop down-stop lock prevents hardtop movement
		Quarter Windows: • Power instead of fixed • Non-independent operation
		Roof: • Steel roof and liftgate replaced by two-piece retracting composite roof • Powered by electro-hydraulic system • Spyder-unique heated rear window replaces heated liftgate glass • Uses coupe timer and switch
		Weatherstrips: • Spyder-unique
		Windshield Header: • Electro-mechanical header latch system • Single motor-driven assembly with dual latches with integrated limit switches • Manual override release/latch feature

GROUP #	GROUP DESCRIPTION	CHANGE SUMMARY
42	Body (continued)	• Wiring harness changes
51	Exterior	Drip Moulding • Modified coupe part Hard Tonneau Spoiler: • Spyder-unique • Non-moveable design with integrated high-mount stop light
		Liftgate Lock Cylinder: • Not used for Spyder • Replaced by emblem cover
		Rear Bumper Decal (LH): • MITSUBISHI decal is carry-over part without diamond star • Spyder-unique location
		Rear Bumper Decal (RH) • SPYDER VR4 and SL decal are Spyder-unique • Spyder-unique location
		Rear Bumper Upper Extensions: • LH and RH modified to accommodate Spyder-unique body structure
		Side Air Dam: • Modified to accommodate Spyder-unique body structure
52	Interior	Front Pillar Trim: • Modified coupe part
		Front Seats: • Seat belt guides Spyder-unique • Seat recline angle restricted
		Headlining: • Hard, molded, vinyl wrapped, multi-section • A/C in-car temperature sensor relocated to center headlining
		Luggage Compartment Floor Boxes: • Modified coupe parts (LH) & (RH)
		Luggage Compartment Trim: • Spyder-unique (soft trim) • Floor board replaced by an object-in-trunk sensor • Carry-over cargo lamp assembly, new switch and location changes • Wiring harness changes
		Quarter Trim: • Spyder-unique • Courtesy lights carry-over coupe parts
		Rearview Mirror: • Spyder-unique, self-dimming, lighted • Spyder-unique mounting location and mounting button • Coupe's mounting button may be existing but is not used and is covered by a garnish
		Rear Seatbacks and Locking System: • Spyder-unique
		Seat Belts (Front and Rear): • Spyder-unique • Mounting points relocated
		Sunvisors: • Spyder-unique
54	Chassis Electrical	CD (Ccmpact-Disc) Auto Changer: • CD changer cover deleted • Location is in same proximity as coupe • Spyder-unique front and rear mounting brackets • Surrounded by Spyder-unique body structure • Accessible through door in body structure behind RH rear seatback • Can be serviced by removing rear-facing body structure cover

GROUP #	GROUP DESCRIPTION	CHANGE SUMMARY
54	Chassis Electrical (continued)	HomeLink™ Universal Transmitter: • All-new unit • Located in center of windshield header garnish • Must be removed to access header latch manual override • Wiring harness changes
		Motor Antenna: • Relocated from rear fender to front fender • Spyder-unique mounting hardware (some relocated coupe parts) • Relocated relay is mounted in passenger compartment, behind glove box • Wiring harness changes
		Radio Amplifier: • Spyder has a different amplifier • Externally appears the same as coupe • Internally modified for better bass • Same attaching hardware
		Rear Combination Lights: • LH and RH modified to accommodate Spyder-unique body structure • Not available as a service part modified for the Spyder • Modify prior to installation
		Theft Alarm System: • Relocated light automatic shut-off unit • Relocated keyless entry antenna and receiver • Coupe's keyless entry receiver mounting bracket modified to accommodate Spyder, available modified as a service part
55	Heater, Air Conditioning, and Ventilation	Climate Control Temperature Sensor: • Located in rear headlining section • See page 55-1 in this Manual for information on operating the system when the hardtop is open • Wiring harness changes
	Spare and Full Size Tire	Spare Tire: • When not in use, should be stored in well, same as coupe Full Size Tire: • When not in use, cannot be stored in spare tire well; reinstall object-in-trunk sensor, and place tire far left to clear hardtop down-stop

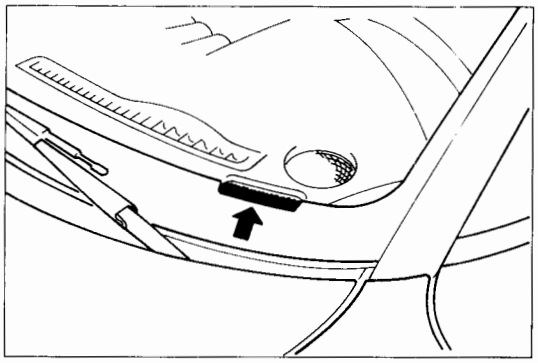

VEHICLE IDENTIFICATION

VEHICLE IDENTIFICATION NUMBER LOCATION

The vehicle identification number (V.I.N.) is located on a plate attached to the top of the instrument panel.

VEHICLE IDENTIFICATION CODE CHART PLATE

All vehicle identification numbers contain 17 digits. The vehicle number is a code which tells country, make, vehicle type, etc.

<1995 MODELS>

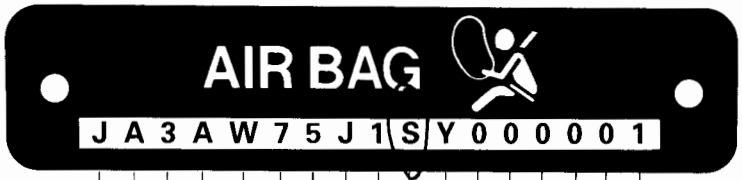

1st Digit	2nd Digit	3rd Digit	4th Digit	5th Digit	6th Digit	7th Digit	8th Digit	9th Digit	10th Digit	11th Digit	12th to 17th Digits
Country	Make	Vehicle type	Others	Line	Price class	Body	Engine	*Check digit	Model year	Plant	Serial number
J- Japan	A- Mitsubishi	3- Passenger Car	A- Driver and Passenger Air Bag	M- 3000GT FWD N- 3000GT AWD V- 3000GT FWD Convertible W- 3000GT AWD Convertible	5- Sports 6- Premium 7- Ultimate	4- 3-door Hatchback 5- Convertible	J- 3.0 dm³ (181.4 cu. in.) [DOHC-MFI] K- 3.0 dm³ (181.4 cu. in.) [DOHC-MFI-Turbo]	1 2 3 - - - - - 9 X	R- 1994 Year S- 1995 Year	Y- Nagoya Plant	000001 to 999999

NOTE
*"Check digit" means a single number or letter X used to verify the accuracy of transcription of vehicle identification number.

V.I.N. (except sequence number)	Brand	Engine displacement	Models code
JA3AV65J□SY	Mitsubishi 3000GT <FWD> (Spyder SL)	3.0 dm³ (181.4 cu. in.) [DOHC-MFI]	Z11ABRPML7M
JA3AW75K□SY	Mitsubishi 3000GT <AWD> (Spyder VR4)	3.0 dm³ (181.4 cu. in.) [DOHC-MFI-TURBO]	Z16ABJGFL7M

Theft protection label

For original parts

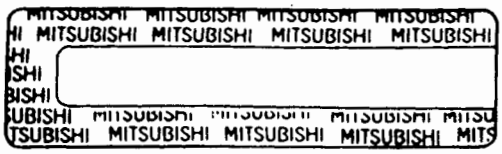

For replacement parts

THEFT PROTECTION

In order to protect against theft, a Vehicle Identification Number (VIN) is attached as a label to the hard tonneau.

In addition, a theft-protection label is attached to replacement parts for the hard tonneau.

Caution regarding tonneau repairs:

1. **When repainting original tonneau do so after first masking the theft-protection label, and, after painting, be sure to peel off the masking tape.**
2. **The theft-protection label for replacement parts may be covered by masking tape, so such parts may be able to be painted as is. If masking tape is not on the label, be sure to cover it. The masking tape should be removed after painting is finished.**
3. **The theft-protection label should not be removed from original parts or replacement parts.**

LOCATIONS

Target area (A: for original equipment parts, B: for replacement parts)

Tonneau

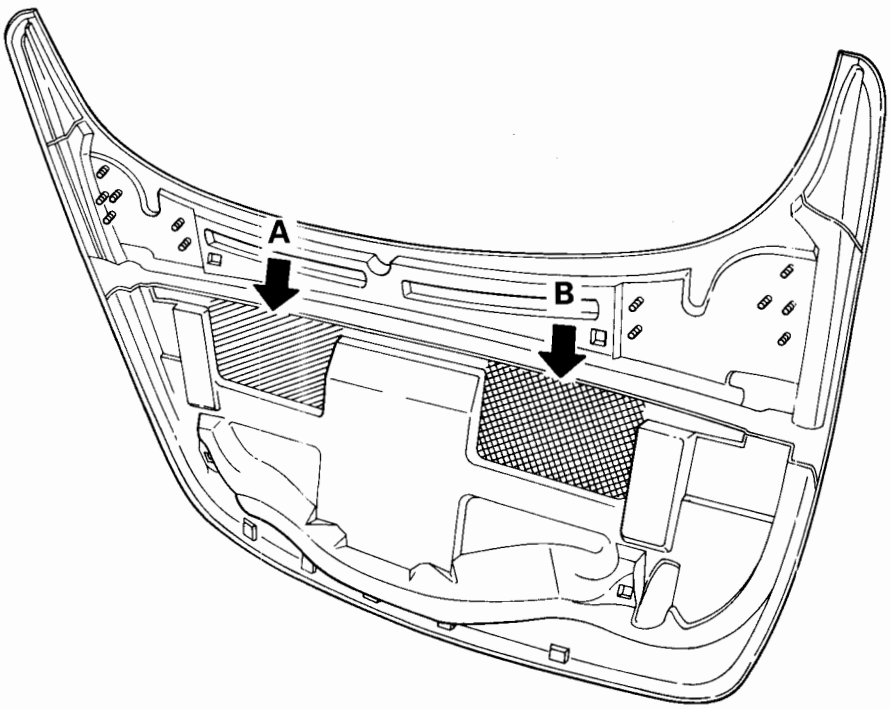

GENERAL INFORMATION ABOUT THE RETRACTABLE HARDTOP SYSTEM

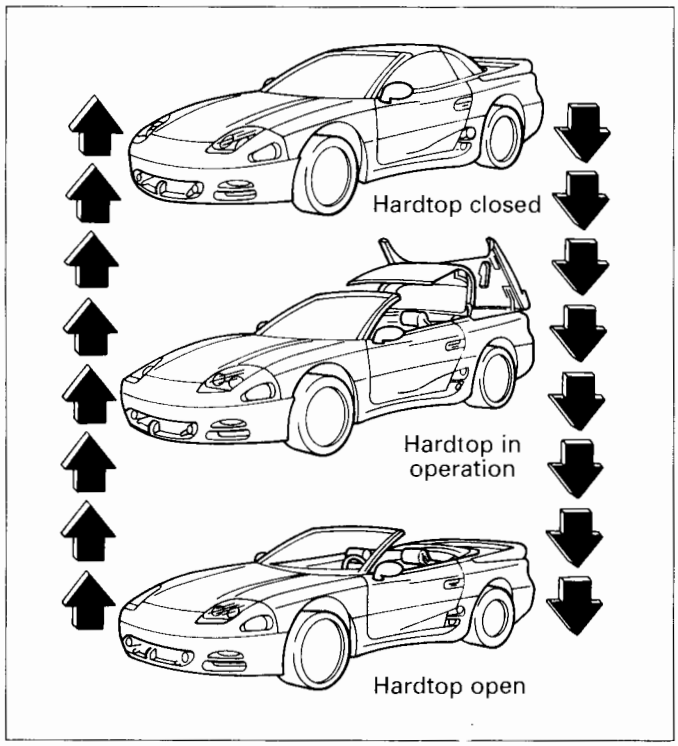

This car has a "one-touch" (or single-switch) system, with a built-in delay safety feature, for operating the retractable hardtop, hard tonneau, windshield header latches, quarter windows and power door windows sequentially. The delay feature only works when closing the hardtop; it stops the hardtop several centimeters (inches) from the windshield in case there is something between the hardtop and where it secures to the windshield header. Releasing and pressing the hardtop switch on the "CLOSE" side will resume operation.

The hardtop system also has another feature called an automatic "all-window glass-closed and up" feature. This feature allows the operator to raise the door glass, and close the quarter windows simultaneously, but only after the hardtop has closed and the hard tonneau has fully latched. For more information and important precautions on this feature and all the power windows, refer to **POWER QUARTER WINDOWS AND DOOR WINDOWS** in this section.

While the hardtop is being opened or closed (which includes the automatic opening and closing of the hard tonneau) a chime will sound and the red indicator lamp to the left of the hardtop switch will flash at the normal rate of 1 flash per second. The vehicle **MUST NOT** be driven until the chime and indicator turn off. (Note that the hard tonneau indicator will not light when operating the hardtop.)

In order for the closing of the hardtop to be complete, the header latches must have latched the hardtop, the quarter windows and door windows must have fully closed, and the hard tonneau must have fully latched. Otherwise, the chime and indicator will not turn off. The chime will sound for 1 second to indicate the closing of the hardtop is complete. To confirm that the hardtop is latched, push up on the hardtop after the 1 second chime turns off.

If a problem is encountered by the system, such as if an object is detected in the hardtop stowage area, the system will only allow the hardtop to open halfway, and stop. The chime and indicator will flash at twice the normal rate until the problem is resolved.

The switch located next to the hardtop switch is for operating the hard tonneau independently when operating the hardtop is not desired (refer to **NORMAL OPERATION - HARD TONNEAU,** in this section).

Before operating the hardtop system or hard tonneau the parking brake must be set and the gear selector should be in the "P" (PARK) (automatic transaxle), or neutral position (manual transaxle). Then, start the vehicle.

For complete operating procedures, refer to **NORMAL OPERATION - OPENING** (or **CLOSING**) **RETRACTABLE HARDTOP,** or **NORMAL OPERATION - HARD TONNEAU,** in this section.

NOTE
Should either the retractable hardtop or the hard tonneau's power systems become inoperable they can be operated manually (refer to **MANUAL OPERATION - OPENING** [or **CLOSING**] **RETRACTABLE HARDTOP,** or **MANUAL OPERATION - HARD TONNEAU,** in this section).

Caution

(1) <u>WHEN OPENING THE RETRACTABLE HARDTOP,</u> always make sure there are no items or packages in the hardtop stowage area. Even a small article could scratch the hardtop's finish or damage the hardtop, glass windows or mechanisms. Personal injury could result.

(2) The retractable hardtop stowage area has an object-in-trunk sensor that will restrict operation of the hardtop system if certain articles are within the top stowage area. Object shape, size, material, weight or placement may affect detection. <u>ALWAYS</u> check the hardtop stowage area for items when opening the hardtop.

(3) When opening or closing the retractable hardtop, keep hands clear from roof panel

joints and any part of the hardtop or hard tonneau mechanisms.

(4) Keep hands and any part of the body away from moving parts such as power quarter windows, power door windows, and the top of the windshield header where the hardtop secures.

(5) Before and during opening and closing of the hardtop or hard tonneau, make sure that your passengers are aware that you will operate the system. Otherwise, personal injury may result from the quarter windows unexpectedly retracting or closing and the door windows raising or lowering.

(6) Operating the retractable hardtop system without the engine running may discharge the vehicle battery, resulting in hard engine starting or a no start condition.

(7) Once the hardtop is lowered do not place any cargo in or around the hardtop.

(8) Make sure the hard tonneau is closed; driving with the hard tonneau incompletely closed is hazardous.

(9) To avoid damage, do not sit or place excessive weight on the hard tonneau or the trim panels above the rear seatbacks.

(10) Never operate the retractable hardtop or the hard tonneau while the vehicle is in motion.

(11) Never press the hardtop "OPEN" switch solely to retract the quarter windows after the hardtop has closed and latched.

(12) Never press the hardtop "OPEN" switch solely to lower the door windows.

OBJECT-IN-TRUNK SENSOR

The Spyder has an object-in-trunk sensor located in the cargo/hardtop stowage area. The sensor consists of a pressure-sensitive mat bonded to the removable trunk floor board. The sensor is designed to restrict operation of the hardtop system if articles are within the hardtop stowage area. Object size, shape, material, weight and placement may affect detection. **ALWAYS** check the stowage area for items when opening the hardtop. Even a small article could scratch the hardtop's finish or damage the hardtop, glass windows or mechanisms. Personal injury could result.

To remove the object-in-trunk sensor, raise the front of it, disconnect the wire connector at the luggage compartment floor box, then remove the sensor from the stowage area.

NOTE

When you reinstall the sensor, be sure to reconnect the wire connector, otherwise the hardtop will only open partway and stop, until the sensor is reconnected.

COLD WEATHER DRIVING

Before opening or closing the retractable hardtop be sure to clean off any snow or ice from the vehicle, particularly the hardtop roof and tonneau, which could cause damage when the hardtop and/or tonneau is operated. Cleaning off the hardtop and tonneau will also avoid getting snow and ice in the cargo/hardtop stowage area which could melt and refreeze.

Do not operate the hardtop or tonneau if icing has not allowed either system to function. When icing has occurred, allow the vehicle to stand in a warm area to thaw.

POWER QUARTER WINDOWS AND DOOR WINDOWS

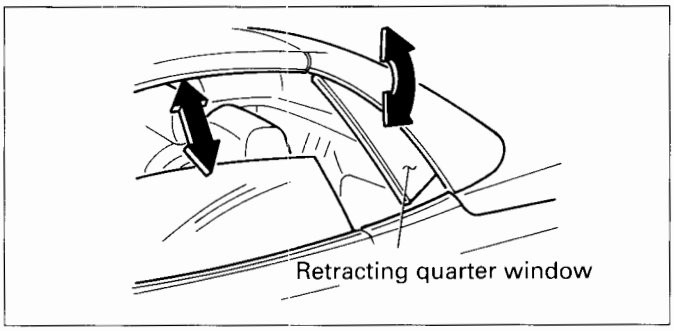

The power quarter windows and door windows are part of the retractable hardtop's "one-touch" system.

Unlike the door windows which have separate drive motors, the quarter windows cannot be operated individually because one motor drives both windows simultaneously. No switch is provided to operate the quarter windows separately. **DO NOT** use the quarter windows for ventilation; they must remain closed while the hardtop is closed and latched.

When the hardtop opens, automatically the quarter windows retract and the door windows lower. But only when closing the hardtop, what is called the automatic "all-window glass-closed and up" feature, can be used to close the quarter and door windows simultaneously. This feature can be used for convenience for when you want to secure and lock the vehicle after having the hardtop open.

To use this feature, for instance when closing the hardtop to secure the vehicle, press and hold the hardtop "CLOSE" switch after the safety stop feature stops the hardtop near the windshield. Holding the switch after the header latches latch, and the hard tonneau latches, will close the quarter windows and door windows.

NOTE

1. The quarter windows may be fully closed before the door windows. So continue to

press and hold the "CLOSE" switch until the quarter windows and door windows are closed and the 1 second chime sounds. Then, if you wish, use the door window switches to raise or lower the door windows.

2. Although the door windows can be raised and lowered independently of the quarter windows using the door window switches, they will also operate simultaneously with the quarter windows regardless of what position they are in when the hardtop "OPEN" or CLOSE" switch is pressed.

Caution

(1) DO NOT at any time press the hardtop "OPEN" switch to solely open the windows. Pressing the "OPEN" switch solely to open any of the window glass will, without notice, unlatch the hardtop and hard tonneau, and possibly start opening the hard tonneau and hardtop. DO NOT drive the vehicle with the header latches not fully latched.

(2) Whenever the hardtop "OPEN" switch is accidentally pressed, open the hardtop 101.6 - 152.4 mm (4 - 6 inches) and then close the hardtop.

(3) When opening the hardtop, ALWAYS be sure BOTH quarter windows have retracted. DO NOT open the hardtop if BOTH windows do not fully retract.

(4) The hardtop may not open if the quarter windows do not retract. Therefore, do not attempt to open the hardtop manually until the headlining is removed, and the quarter windows are retracted manually. This can be done using a 5 mm allen wrench. Insert the 5 mm allen wrench into the center of the quarter window motor and turn clockwise to retract both quarter windows.

(5) Do not force the door or quarter windows.

LOW OR DISCHARGED BATTERY

(1) If the vehicle battery voltage is less than 10 volts for more than 2 consecutive seconds, the hardtop ECU will shut down until 10 or more volts is detected.

(2) If the vehicle battery is discharged, the battery must be charged or the car must be started and the battery allowed to recharge before attempting to resume hardtop operation.

(3) If the battery cannot be charged, or the car started, the closing of the hardtop, opening and closing of the hard tonneau or header latches can be operated manually. To do this, refer to the appropriate heading under **MANUAL OPERATION** - in this section.

OVER-CHARGED BATTERY

The hardtop ECU will instantly shut down whenever 16 or more volts is detected, and turn on after the voltage has dropped below 16 volts. This is a good indication of a faulty charging system.

HARD TONNEAU

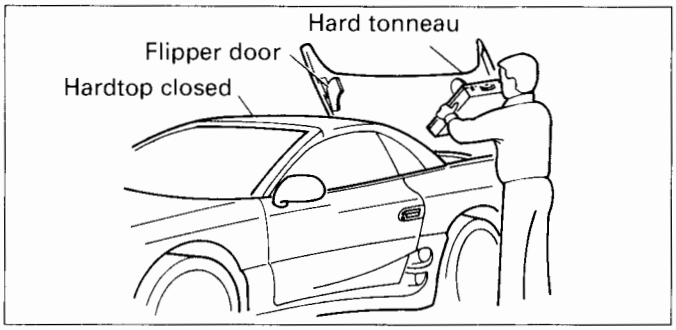

The hard tonneau covers the retractable hardtop when the hardtop is open, or it covers the stowage area, which can be used for cargo only when the hardtop is closed. The hard tonneau may be opened and closed without operating the hardtop, but only when the hardtop is closed and latched. When the hardtop is open the hard tonneau switch is rendered inoperative.

The hard tonneau can be opened and closed several ways:
- automatically with the retractable hardtop operation;
- independently by pressing the hard tonneau switch;
- manually if the power system becomes inoperable.

NORMAL OPERATION - HARD TONNEAU

1. Set the parking brake. Make sure the gear selector lever is in the "P" (PARK) (automatic transaxle), or neutral position (manual transaxle).
2. Start the engine.

Caution
Operating the hard tonneau system without the engine running may discharge the vehicle's battery, resulting in hard engine starting or a no start condition.

3. Press and hold the hard tonneau switch on the "OPEN" or "CLOSE" side of the switch. Momentarily the hard tonneau will operate.

NOTE
When the switch is pressed the red indicator lamp to the right of the switch will flash and a chime will sound until the hard tonneau has closed and latched.

Caution
(1) WHEN OPENING THE RETRACTABLE HARDTOP, always make sure there are no items or packages in the hardtop stowage area. Even a small article could scratch the hardtop's finish or damage the hardtop, glass windows or mechanisms. Personal injury could result.
(2) The retractable hardtop stowage area has an object-in-trunk sensor that will restrict operation of the hardtop system if certain articles are within the top stowage area. Object shape, size, material, weight or placement may affect detection. ALWAYS check the hardtop stowage area for items when opening the hardtop.
(3) Once the retractable hardtop is opened and stowed do not place any cargo in or around it.
(4) Make sure the hard tonneau is closed and latched; driving with hard tonneau incompletely closed is hazardous.
(5) To avoid damage, do not sit or place excessive weight on the hard tonneau or the trim panels above the rear seatbacks.
(6) When opening or closing the hard tonneau keep hands and any part of the body away from moving parts, such as the flipper doors (located at the front ends of the hard tonneau) and along where the hard tonneau seals to the vehicle body.

QUICK TROUBLESHOOTING GUIDE FOR THE HARD TONNEAU

(For information and troubleshooting on the hardtop and hard tonneau systems together, see **NORMAL OPERATION - OPENING [or CLOSING] RETRACTABLE HARDTOP,** in this section. For Diagnostics and Testing refer to GROUP 42.)

DESCRIPTION OF PROBLEM	POSSIBLE CAUSE	ACTION TO TAKE	COMMENTS
Hard Tonneau does not operate.	• The gear selector is not in "P" (PARK) (automatic transaxle). • The gear selector is not in neutral (manual transaxle), and the parking brake is not applied.	• Set the parking brake and place the gear selector in "P" (PARK) (automatic transaxle), then start the engine. • Set the parking brake and place the gear selector in neutral (manual transaxle), then start the engine.	Always apply the parking brake before operating the hardtop or the hard tonneau.
Hardtop is open and hard tonneau will not open using the hard tonneau switch.	Normal operation: tonneau switch is electrically locked-out.		In an emergency hard tonneau can be opened manually (refer to MANUAL OPERATION - HARD TONNEAU in this section).
Hardtop appears to be closed, but hardtop chime and indicator sound and blink at twice the normal rate, and the hard tonneau will not open or close using the hard tonneau switch.	Hardtop is not fully latched.	Open the hardtop 101.6 - 152.4 mm (4 - 6 in.) then close the hardtop again using the hardtop "CLOSE" switch. Release the switch when the chime and indicator turn off. Wait for the 1 second chime, then push up on the hardtop to be sure it has latched.	• Service the vehicle. • In an emergency, the header latches can be operated manually (refer to MANUAL OPERATION - HEADER LATCHES in this section.
Hard tonneau will not open or close without engine running.	Vehicle battery is discharged to less than 10 volts.	• Recharge battery. • Start the car and allow the battery to recharge.	Make sure all accessories are off, and do not operate hardtop or hard tonneau while battery is recharging.
	Vehicle battery is overcharged (16 or more volts).	Turn on some or all accessories to lower the battery voltage below 16 volts.	Could indicate possible charging system malfunction.
Hard tonneau will not open, or opens slowly, with engine running, but pump can be heard running.	• Pump's bypass valve may not be fully in the "POWER" position. • Low pump pressure.	Turn the bypass valve to the "POWER" position until it stops.	If turning bypass valve does not solve problem, service the vehicle.
Hard tonneau's chime and indicator sounding and blinking at twice the normal rate, will not turn off when the tonneau appears to be closed.	Indicates that hard tonneau is not fully closed and latched.	Open hard tonneau and check to see that nothing is preventing the hard tonneau from closing, then close the hard tonneau. If the tonneau still will not latch, push down on both front ends of the tonneau to engage latches.	Service the vehicle if you have to push down on the hard tonneau to get it to latch.
Only one hard tonneau latch releases and tonneau does not open.	Latch mechanisms may require service.	DO NOT continue to operate tonneau or hardtop.	• Service the vehicle. • In an emergency, the tonneau can be opened manually (refer to MANUAL OPERATION - HARD TONNEAU in this section).
Hard tonneau's chime and indicator sound and blink at twice the normal rate, but does not appear to be associated with any noticeable problem.	May indicate a general malfunction.	DO NOT operate the hardtop or hard tonneau.	• Service the vehicle. • In an emergency either system can be operated manually (refer to the appropriate heading under MANUAL OPERATION in this section).

RETRACTABLE HARDTOP

NORMAL OPERATION - OPENING RETRACTABLE HARDTOP

1. Set the parking brake. Make sure the gear selector lever is in the "P" (PARK) (automatic transaxle), or neutral position (manual transaxle).
2. Be sure that the exterior of the hardtop is completely clean and dry.
3. Start the engine.

Caution
Operating the retractable hardtop system without the engine running may discharge the vehicle battery, resulting in hard engine starting or a no start condition.

Caution
(1) WHEN OPENING THE RETRACTABLE HARDTOP, always make sure there are no packages in the hardtop stowage area. Even a small article could scratch the hardtop's finish or damage the hardtop, glass windows or mechanisms. Personal injury could result.
(2) The retractable hardtop stowage area has an object-in-trunk sensor that will restrict operation of the hardtop system if certain articles are within the hardtop stowage area. Object shape, size, material, weight or placement may affect detection. ALWAYS check the hardtop stowage area for items when opening the hardtop.
(3) When opening the hardtop, ALWAYS be sure BOTH quarter windows have retracted. DO NOT open the hardtop if BOTH windows do not fully retract until the headlining is removed, and the quarter windows are retracted manually. This can be done using a 5 mm allen wrench. Insert the 5 mm allen wrench into the center of the quarter window motor and turn clockwise to retract both quarter windows.

4. Press and hold the hardtop "OPEN" switch to open the hardtop.

NOTE
(1) When the hardtop "OPEN" switch is pressed sequentially the quarter windows retract and door windows lower, and the header latches unlatch, and the hard tonneau unlatches and begins to open along with the hardtop.
(2) If the hardtop only opens halfway and stops, and the chime and indicator flash and sound at twice their normal rate, that is an indication that:
- an object has been detected by the object-in-trunk sensor or,
- the object-in-trunk sensor is not connected.

Remove the object or reconnect the sensor, then go to Step 5.

5. Press and hold the hardtop "OPEN" switch. Release the switch after the hard tonneau has closed and latched and the chime and indicator have turned off. The chime will sound for 1 second to indicate the opening of the hardtop is complete.

NOTE
If the hardtop stops and reverses direction and stops at the halfway closed position, that is an indication that:
- an object that was not detected earlier (due to size, shape, material, weight or placement) has now been detected by the object-in-trunk sensor, or;
- an item has just been placed in the top stowage area while the hardtop was being opened.

Remove the object and resume opening the hardtop.

6. If desired, raise the door window glass using the door window switches.

AIR CONDITIONING - WHEN HARDTOP IS OPEN

When the hardtop is open, the in-car temperature sensor for the air conditioning is now reading the temperature inside the hardtop stowage area. Therefore, when using the A/C set the "MODE" to the desired selection and select the fan speed using "FAN". Set the temperature control ("TEMP") to a comfortable setting as required. The A/C system is not designed to cool the vehicle with the hardtop open.

NORMAL OPERATION - CLOSING RETRACTABLE HARDTOP

1. Set the parking brake. Make sure the gear selector lever is in the "P" (PARK) (automatic transaxle), or neutral position (manual transaxle).
2. Start the engine.

Caution
Operating the retractable hardtop system without the engine running may discharge the battery, resulting in hard engine starting or a no start condition.

3. Press and hold the hardtop switch on the "CLOSE" side until the hardtop stops near the windshield header, then release the switch.

NOTE
The hardtop has a safety stop feature that stops the hardtop near the windshield.

4. Make sure there is nothing atop the windshield header where the hardtop secures.
5. Press the "CLOSE" switch and release it only

after the quarter windows and door windows have fully closed, the hard tonneau has closed and latched, and the chime and indicator have turned off. The chime will sound for 1 second to indicate closing of the hardtop is complete.

NOTE
(1) The quarter windows may be fully closed before the door windows. If you wish, use the door window switches to lower the door windows.
(2) Although the door windows can be raised and lowered independently of the quarter windows using the door window switches, they will also operate simultaneously with the quarter windows regardless of what position they are in when the hardtop "OPEN" or "CLOSE" switch is pressed.

Caution
(1) DO NOT at any time press the hardtop "OPEN" switch to solely open the windows. Pressing the "OPEN" switch solely to open any of the window glass will, without notice, unlatch the hardtop and hard tonneau, and possibly start opening the hard tonneau and hardtop. DO NOT drive the vehicle with the header latches not fully latched.
(2) Whenever the hardtop "OPEN" switch is accidentally pressed, open the hardtop 101.6 - 152.4 mm (4 - 6 inches) and then close the hardtop.

6. To confirm that the hardtop is latched, push up on the front of the hardtop.

   If the hardtop is not latched, open it 101.6 - 152.4 mm (4 - 6 inches), then repeat Steps 5 and 6.

NOTE
If you still cannot latch the hardtop, operate the latches manually (refer to **MANUAL OPERATION - HEADER LATCHES**, in this section).

Caution
In an emergency, do not force the windows. If the quarter windows do not close, service the quarter window system.

NOTE
Although the rear compartment area is primarily intended for hardtop stowage, it may be used as a trunk or luggage compartment when the hardtop is in the closed position. Before lowering the hardtop, any item in this area must be removed.

Caution
Make sure there are no items or packages in the cargo/hardtop stowage area when you open the hardtop. Even a small article could scratch the hardtop's finish or damage the hardtop, glass windows or mechanisms.

ROOFTOP CARRIER AND LUGGAGE RACK

A rooftop or luggage carrier of any type or design **MUST NOT** be used on the Spyder's retractable hardtop or hard tonneau. This includes, but is not limited to ski, bicycle or luggage racks. Damage to the retractable hardtop and/or hard tonneau may result.

THEFT-ALARM SYSTEM

NOTE

1. The theft-alarm system operates as described in the Owner's Manual, with the exception where references to the hatchback are made; the Spyder's hard tonneau replaces the hatchback. The hard tonneau cannot be unlocked by key.
2. The theft-alarm system is fully functional when the hardtop is open.
3. When the hardtop is open and the alarm is armed, the hard tonneau can still be manually opened and closed without activating the alarm.

QUICK TROUBLESHOOTING GUIDE FOR THE HARDTOP AND HARD TONNEAU

(For information and troubleshooting on the hard tonneau system alone, see **NORMAL OPERATION - HARD TONNEAU,** in this section. For Diagnostics and Testing refer to GROUP 42.)

DESCRIPTION OF PROBLEM	POSSIBLE CAUSE	ACTION TO TAKE	COMMENTS
Hardtop or tonneau do not operate.	• The gear selector is not in "P" (PARK) (automatic transaxle). • The gear selector is not in neutral (manual transaxle), and the parking brake is not applied.	• Set the parking brake and place the gear selector in "P" (PARK) (automatic transaxle), then start the engine. • Set the parking brake and place the gear selector in neutral (manual transaxle), then start the engine.	Always apply the parking brake before operating the hardtop or the hard tonneau.
Hardtop is open and hard tonneau will not open using the hard tonneau switch.	Normal operation; tonneau switch is electrically locked-out.		In an emergency hard tonneau can be opened manually (refer to MANUAL OPERATION - HARD TONNEAU, in this section).
Hardtop appears to be closed, but hardtop chime and indicator sound and blink at twice the normal rate, and the hard tonneau will not open or close using the hard tonneau switch.	Hardtop is not fully latched.	Open the hardtop 101.6 - 152.4 mm (4 - 6 inches), then close the hardtop again using the hardtop "CLOSE" switch. Release the switch when the chime and indicator turn off. Wait for the 1 second chime, then push up on the hardtop to be sure it has latched.	In an emergency, the header latches can be operated manually (refer to MANUAL OPERATION - HEADER LATCHES, in this section).
Hardtop and/or tonneau will not open or close without engine running.	Vehicle battery is discharged to less than 10 volts.	• Recharge the battery. • Start the car and allow the battery to recharge.	Make sure all accessories are off and do not operate the hardtop or hard tonneau while the battery is recharging.
	Vehicle battery is over-charged (16 or more volts).	Turn on some or all accessories to lower the battery voltage below 16 volts.	Could indicate possible charging system malfunction.
Hard tonneau and/or hardtop will not open, or opens slowly, with engine running, but pump(s) can be heard running.	• Pump's bypass valve(s) may not be fully in the "POWER" position. • Low pump pressure.	Turn the bypass valve to the "POWER" position until it stops.	If turning bypass valve does not solve the problem, service the vehicle.
Hard tonneau's chime and indicator sounding and blinking at twice the normal rate, will not turn off when the tonneau appears to be closed.	Indicates that hard tonneau is not fully closed and latched.	Open hard tonneau and check to see that nothing is preventing the hard tonneau from closing, then close the hard tonneau. If the tonneau still will not latch, push down on both front ends of the tonneau to engage latches.	Service the vehicle if you have to push down on the hard tonneau to get it to latch.
Only one hard tonneau latch releases and tonneau does not open.	Latch mechanisms may require service.	• DO NOT continue to operate tonneau or hardtop. • Service the vehicle.	In an emergency, the tonneau can be opened manually (refer to MANUAL OPERATION - HARD TONNEAU, in this section).
Hardtop stops at halfway open position while opening, and chime and indicator sound and blink at twice the normal rate.	• Object-in-trunk sensor disconnected. • Object detected by object-in-trunk sensor.	• Reconnect object-in-trunk sensor. • Remove detected object.	

Hardtop opens, but then reverses direction, and stops halfway closed.	• Object detected by object-in-trunk sensor. • An object has been placed in the stowage area while the hardtop was being opened.	Remove detected object.	
Hardtop stops several inches from the windshield header while closing.	Normal operation.	Release the switch, make sure nothing is between the header and the hardtop, and press the switch again.	Normal condition; hardtop has a safety feature that allows you to check that nothing is between the header and the hardtop.
Hard tonneau or hardtop's chime and indicator sound and blink at twice the normal rate, but does not appear to be associated with any noticeable problem.	May indicate a general malfunction.	• DO NOT operate the hardtop or hard tonneau. • Service the vehicle.	In an emergency either system can be operated manually (refer to the appropriate heading under Manual Operation, in this section).

GENERAL INFORMATION ON MANUAL OPERATION OF THE RETRACTABLE HARDTOP SYSTEM

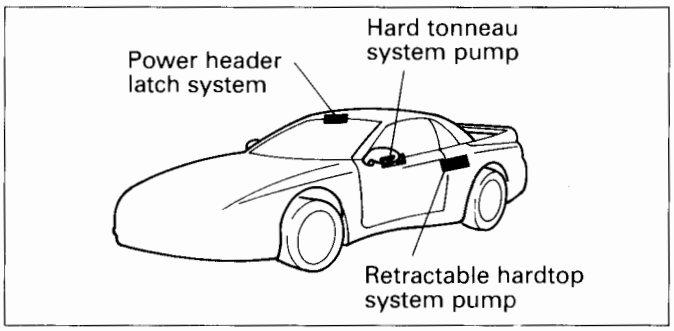

The retractable hardtop system consists of two separate hydraulic systems; one powers the retractable hardtop and the other powers the hard tonneau. There is also a power latch system located in the windshield header.
If one or more systems become inoperable, refer to the appropriate heading or combinations of headings, depending on the circumstances:

- **NORMAL OPERATION - OPENING (or CLOSING) RETRACTABLE HARDTOP**
- **NORMAL OPERATION - HARD TONNEAU**
- **MANUAL OPERATION - OPENING (or CLOSING) RETRACTABLE HARDTOP**
- **MANUAL OPERATION - HARD TONNEAU**
- **MANUAL OPERATION - HEADER LATCHES**

NOTE

(1) Before you attempt to operate any system manually, check that nothing was overlooked that might otherwise allow normal automatic operation, such as:
   - Make sure the manual bypass valve for each hydraulic pump/motor is in the "POWER" position. The system may not work properly or at all if the valves are not closed all the way.
   - Be sure the object-in-trunk sensor is connected.
   - Make sure the vehicle battery is charged and, if possible, the engine running. If battery voltage is less than 10 volts, the hardtop system may not have enough energy to operate properly or at all.
   - Check that the battery is not overcharged; the hardtop ECU will instantly shut off at 16 volts and will not turn on until voltage drops below 16 volts.

(2) Once you are reasonably satisfied that normal operation is not possible then proceed with manual operation.

MANUAL OPERATION - HARD TONNEAU

OPENING THE HARD TONNEAU

1. Set the parking brake. Make sure the gear selector lever is in the "P" (PARK) (automatic transaxle), or neutral position (manual transaxle).
2. Open the vehicle passenger side door. Fold the passenger side rear seatback down to expose the carpeting behind the seats.
   The hard tonneau's pump/motor is on the passenger side.

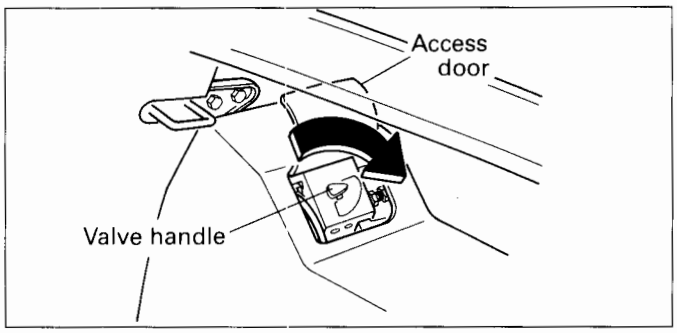

3. Open the passenger side access door on your left, and reach in and rotate the bypass valve handle clockwise 90° to the "MANUAL" position, until it stops.

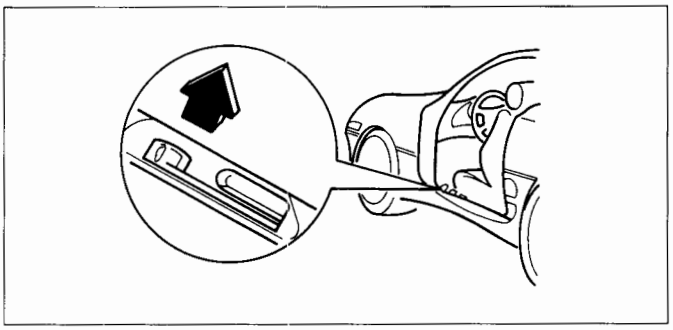

4. Pull the hard tonneau release lever, located to the left beside the driver's seat, up to release the hard tonneau. Make sure both latches are released.

Caution

Never pull the tonneau release lever, except to operate the hard tonneau manually. Otherwise the tonneau will not be fully closed. Driving with the tonneau incompletely closed is hazardous.

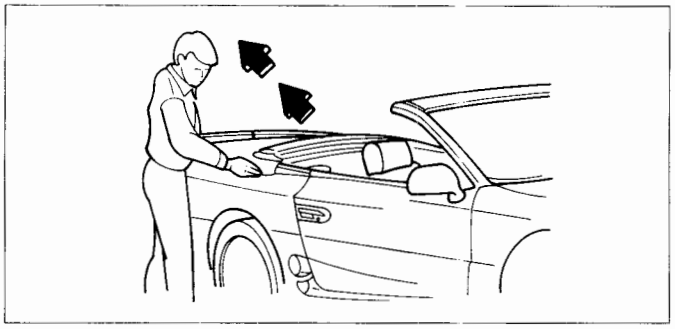

5. Standing at the passenger side, grasp the hard tonneau along the side from underneath, with both hands placed near the front and side center. Slowly lift until it is all the way up.

NOTE
Hydraulic back-pressure created in the hard tonneau system prevents the hard tonneau from being raised quickly.

Caution
The hard tonneau may close unexpectedly before you return the bypass valve to the "POWER" position.

6. Immediately reach in and return the bypass valve to the "POWER" position by rotating the handle counterclockwise 90° until it stops. This will keep the hard tonneau up without additional support.

Caution
If the bypass valve is not completely closed after raising the hard tonneau it may slowly close without warning.

CLOSING THE HARD TONNEAU

1. Open the vehicle's passenger side door. Reach in and rotate the bypass valve handle clockwise 90° to the "MANUAL" position, until it stops.

Caution
The hard tonneau may begin to close immediately when the bypass valve is turned to the "MANUAL" position.

2. Using gentle but firm pressure, push down on the hard tonneau until it is completely closed.

NOTE
The hard tonneau will not slam closed due to the back-pressure in the hydraulic system. **DO NOT APPLY EXCESSIVE FORCE TO CLOSE THE HARD TONNEAU.**

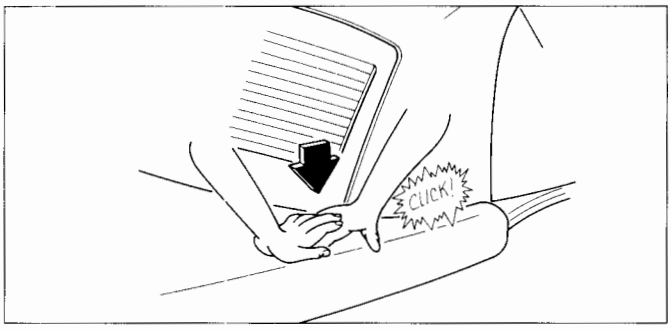

3. Using a hand-on-hand method, press down on the hard tonneau to latch it. You should hear a click when it latches. Make sure that it is latched by gently, but firmly, pulling up on the hard tonneau near the front and side center (near the latch). Repeat for the other latch.

Caution
Make sure the hard tonneau is closed and latched before driving.

4. Return the bypass valve to the "POWER" position until it stops.
5. Close access door.
6 Return seatback to its fully upright position and lock in place.

NOTE
The manual bypass valve must be in the "POWER" position in order to operate the hard tonneau electrically.

MANUAL OPERATION - RETRACTABLE HARDTOP

CLOSING RETRACTABLE HARDTOP

Caution
Closing the retractable hardtop requires two individuals. If you encounter <u>any</u> difficulties, do not continue to close the hardtop and seek assistance/help.

1. Set the parking brake. Make sure the gear selector lever is in the "P" (PARK) (automatic transaxle), or neutral position (manual transaxle).
2. Start the engine.

NOTE
If the engine will not start and the battery does not have enough energy to lower the door glass windows, open both vehicle doors.
This will allow the hardtop's seals to mate correctly to the door glass windows when they shut, after the hardtop is closed.

3. Press and hold the hardtop switch on the "CLOSE" side.

NOTE
At this time the hard tonneau should open revealing the folded hardtop. If it does not open, see **MANUAL OPERATION - HARD TONNEAU**, in this section.

4. Fold the driver side rear seatback down to expose the carpeting behind the seatbacks. The retractable hardtop pump/motor is on the driver side.

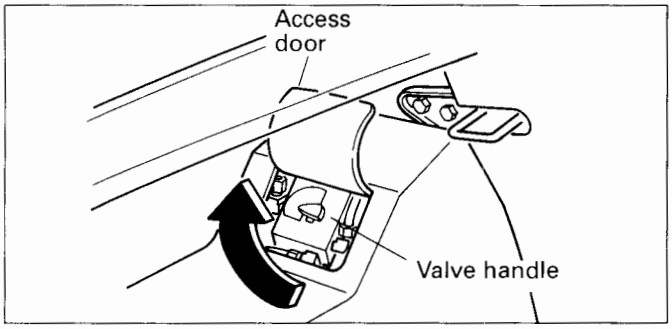

5. Open the access door on the driver side, reach in and rotate the bypass valve handle clockwise 90° to the "MANUAL" position, until it stops.

NOTE: This procedure requires two people.
For illustration clarity, only one person is shown.

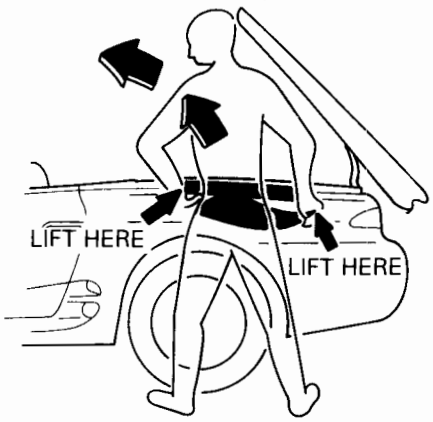

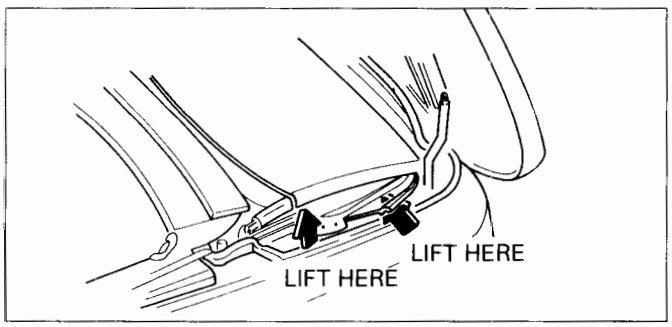

6. With you on one side of the vehicle and your helper on the other, each put one hand under the rear portion of the hardtop, and the other hand under the front portion of the hardtop.

Caution

(1) Keep your fingers clear of the hardtop hinges, mechanism and roof joints.

(2) To avoid risk of personal injury, remove all jewelry (rings, bracelets, wristwatches, etc.) from your hands.

(3) DO NOT lift the hardtop by the quarter windows. Damage to the quarter window system and/or personal injury may result.

NOTE: This procedure requires two people.
For illustration clarity, only one person is shown.

7. Using a constant lifting motion slowly lift the hardtop approximately halfway up.

NOTE
Hydraulic back-pressure created in the hydraulic system prevents the hardtop from being raised quickly.

NOTE: This procedure requires two people.
For illustration clarity, only one person is shown.

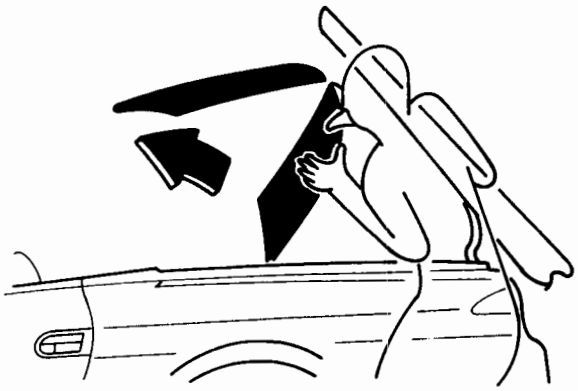

8. Push only on the rear portion of the hardtop as shown above; DO NOT PUSH ON THE REAR WINDOW. Push the hardtop forward until it drops into the windshield header latches.
9. Close header latches. Refer to **MANUAL OPERATION - HEADER LATCHES**, in this section.
10. Close hard tonneau. Refer to **MANUAL OPERATION - HARD TONNEAU**, in this section.

Caution

(1) DO NOT drive the vehicle if the hardtop is not properly latched to the windshield header. Driving with the top incompletely latched is hazardous.

(2) In an emergency, do not force the windows. If the quarter windows do not close, remove the headlining, and retract the quarter windows manually. This can be done using a 5 mm allen wrench. Insert the 5 mm allen wrench into the center of the quarter window motor and turn clockwise to retract both quarter windows.

11. Return the bypass valve to the "POWER" position by rotating the handle counterclockwise 90°.
12. Close the access door.
13. Return the seatback to its fully upright position and lock in place.

OPENING RETRACTABLE HARDTOP

Caution

(1) To prevent damage to hardtop system components (especially the quarter windows), manual operation should only be performed by trained technicians, for the sole purpose of vehicle servicing or repair.

(2) Manual operation of the retractable hardtop requires two individuals.

1. Set the parking brake. Make sure the gear selector lever is in the "P" (PARK) (automatic transaxle), or neutral position (manual transaxle).
2. Start the engine.
3. Open the hard tonneau one of three ways:
   - automatically using the hardtop "OPEN" switch;
   - automatically using the hard tonneau "OPEN" switch;
   - manually, if either system becomes inoperable.

NOTE
When the hardtop "OPEN" switch is pressed sequentially the following may occur: the quarter windows may retract and door windows lower, and the header latches unlatch, and the hard tonneau unlatches and begins to open.

4. Unlatch the hardtop one of two ways:
   - automatically using the hardtop "OPEN" switch;
   - manually if either system becomes inoperable. (refer to **MANUAL OPERATION - HEADER LATCHES**, in this section).

Caution

(1) The quarter windows must be fully retracted in order for the header latches to unlatch. If the quarter windows do not retract, remove the headlining, and manually retract the windows. This can be done using a 5 mm allen wrench. Insert the 5 mm allen wrench into the center of the quarter window motor and turn clockwise to retract both quarter windows.

(2) The header latches must be unlatched before opening the hardtop. If the header latches do not unlatch they can be opened manually (refer to MANUAL OPERATION - HEADER LATCHES, in this section).

(3) Remove any items from the hardtop stowage area.

5. Fold the driver side rear seatback down to expose the carpeting behind the seatbacks. The retractable hardtop pump/motor is on the driver side.

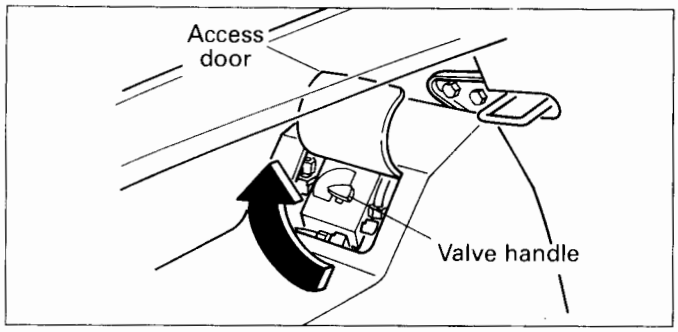

6. Open the access door on the driver side, reach in and rotate the bypass valve handle clockwise 90° to the "MANUAL" position, until it stops.

NOTE: This procedure requires two people.
For illustration clarity, only one person is shown.

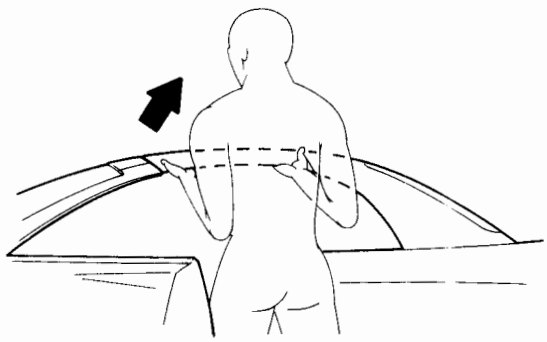

7. Open both vehicle doors. With a person on each side of the vehicle, lift along the side portions of the hardtop front roof panel until the hardtop is halfway open.

NOTE
Hydraulic back-pressure created in the hardtop hydraulic system prevents the hardtop from being lowered quickly.

Caution
Keep your fingers clear of the hardtop hinges, mechanism and roof joints.

NOTE: This procedure requires two people.
For illustration clarity, only one person is shown.

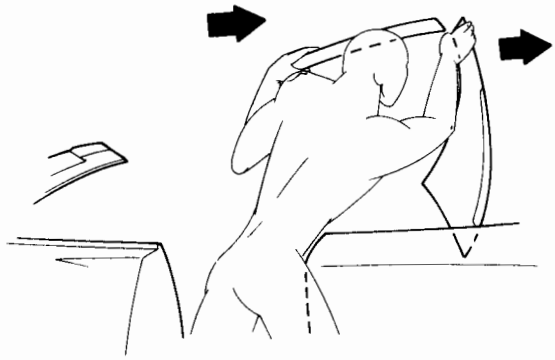

8. To move the hardtop into the stowage area, each person must place one hand on the rear portion of the hardtop at the top of the quarter window opening, and the other hand at the front edge of the hardtop. Pull the front portion while pushing the rear portion to get the hardtop moving into the stowage area.

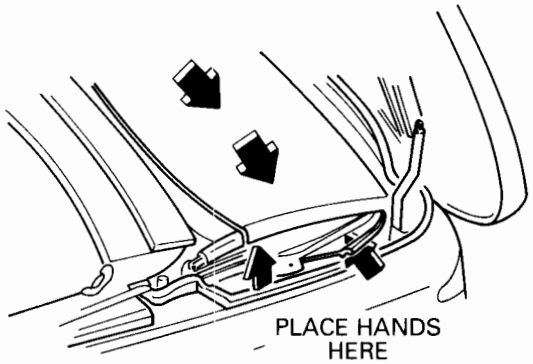

9. Push the hardtop until it is 3/4 open. Then, place both hands under the rear portion of the hardtop to slow it to a stop.

Caution
Be sure to keep your hands and arms from getting caught under the hardtop.

10. Return the bypass valve to the "POWER" position by rotating the handle counterclockwise 90° as required.
11. Close the access door.

12. Return the seatback to its fully upright position and lock in place.
13. If necessary, close the hard tonneau manually.

Caution
Make sure the hard tonneau is closed and latched before driving.

MANUAL OPERATION - HEADER LATCHES

NOTE
A special wrench is provided for removal and reinstallation of the HomeLink™ Universal Transmitter, and it is also used to manually operate the header latches. The special wrench is located inside the CD (Compact-Disc) changer access door behind the passenger side rear seatback.

The HomeLink™ Transmitter may also be removed using a standard #2 cross-tip screwdriver. The header latches may also be operated using a standard 1/4" square drive ratchet and extension.

Caution
When operating the header latches manually, always be sure to remove the wrench from the header latch motor immediately. Otherwise, personal injury may result if the tool is not removed and the hardtop switch is pressed.

TO OPEN OR CLOSE HEADER LATCHES

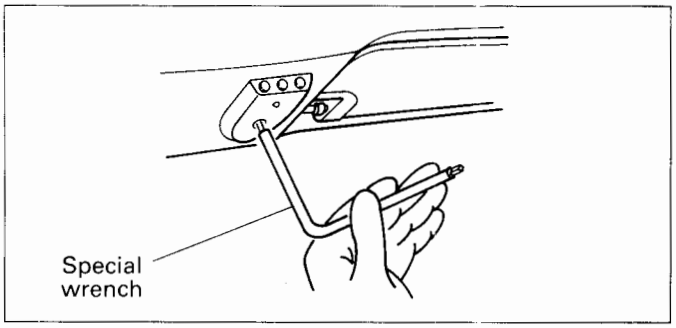

1. Using the special wrench (or a screw driver), remove the screw securing the HomeLink™ Universal Transmitter to the windshield header garnish.
2. Pull HomeLink™ Transmitter down from the header garnish, and move to one side out of your way.

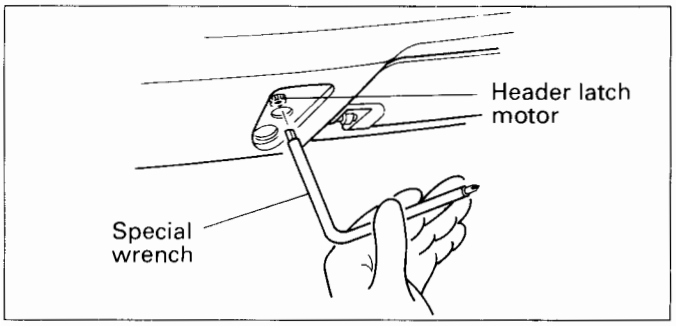

3. Using the special wrench (or a 1/4" square drive ratchet and extension), insert it into the latch motor and turn the wrench (1) full turn clockwise to close the latches.

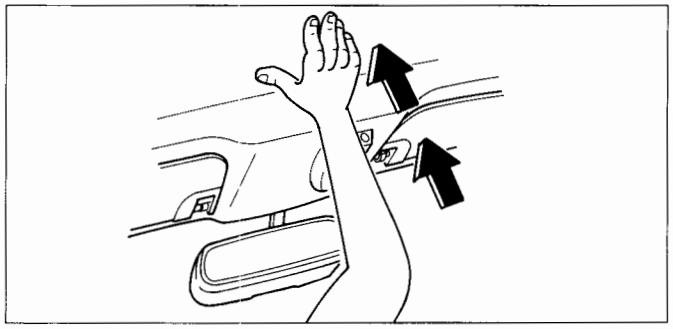

4. To confirm that the hardtop is latched, push up on the front of the hardtop. If the hardtop is not latched, turn the wrench (1) full turn counterclockwise and repeat Steps 3 and 4.
5. Remove the special wrench (or ratchet and extension).
6. Tuck the HomeLink™ Transmitter wires up into the header garnish, and reinstall the HomeLink™ with the screw.
7. Return the special wrench to the tray, and return the seatback to its fully upright position and lock in place.

SPYDER CLEANING RECOMMENDATIONS

INTERIOR

HEADLINING

Clean with a mild soap or a reliable vinyl cleaner. Apply a small amount of solution with a clean cloth or sponge, then wipe with a damp cloth. When the lather has been removed, wipe again with a soft, clean cloth.

HARD TONNEAU PAD

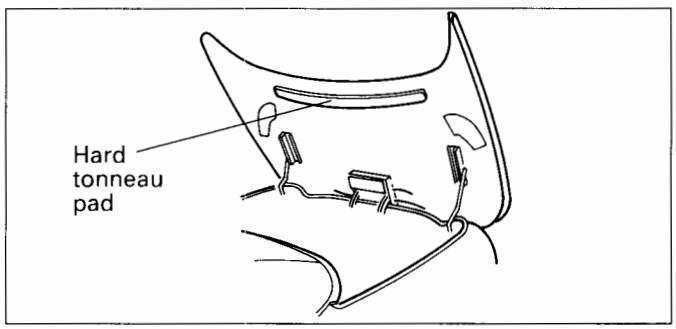

Regularly vacuum the hard tonneau pad to keep it free of dust and dirt.

EXTERIOR

ABOUT THE SPYDER FINISH

The retractable hardtop and hard tonneau have been finished with same high-quality finish as the rest of the vehicle.

WASHING

Always make sure the retractable hardtop is closed and latched. Otherwise, water may enter the vehicle's interior, causing damage. As with the rest of the vehicle, wash it out of direct sunlight, using a mild soap and water solution. Start washing from the roof panels, working downward, using a sponge. After washing, wipe with a chamois or soft cloth.

NOTE
When using a high-pressure washer avoid directing high pressure spray at the weatherstrips.

WAXING THE RETRACTABLE HARDTOP AND HARD TONNEAU

The retractable hardtop and hard tonneau should be waxed like the rest of the vehicle. When waxing around the weatherstrip mating surfaces of the retractable hardtop and hard tonneau, be careful not to put any wax on the weatherstrips. If stained with wax the weatherstrip may not maintain a weatherproof seal with other components. If wax is accidentally applied to the weatherstrip, remove it promptly before it dries.

POLISHING THE RETRACTABLE HARDTOP AND HARD TONNEAU

Treat them the same recommended way as you would the rest of the vehicle.

SPARE TIRE, JACK AND TOOL SET STORAGE

The spare tire, jack and tool set are stowed in the cargo/hardtop stowage area. To access them, first close and latch the retractable hardtop, then open the hard tonneau using the hard tonneau "OPEN" switch, or use manual operation.

Caution
Lowering the retractable hardtop part way to open the hard tonneau is not recommended. You could easily scratch the hardtop while removing the spare tire. Use the hard tonneau "CLOSE/OPEN" switch.

For taking the jack, tire, etc. in and out, first disconnect and remove the object-in-trunk sensor (located in the cargo/hardtop stowage area covering the spare tire, tool set and luggage compartment floor boxes). For information on removal of the object-in-trunk sensor see page 00-9, in this section.

NOTE
It is easier to remove the spare tire from the passenger side (it is closer to you). You may want to protect your clothing and the vehicle finish by covering the rear fender.

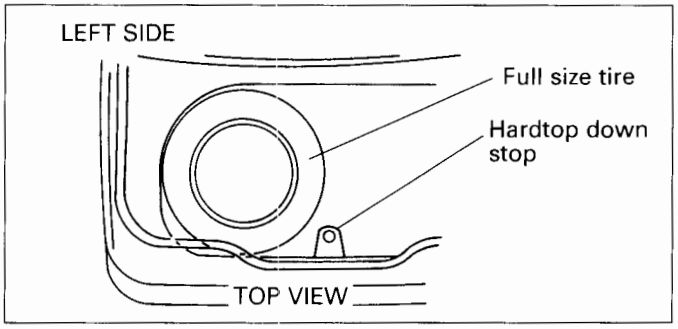

To store the full size tire, reinstall the object-in-trunk sensor and reconnect the wire connector, and place the tire to the far left in the stowage area.

Caution
(1) The stowage compartment for the spare tire is intended ONLY for the spare, not the full size tire and wheel.
(2) Make sure the hardtop down stop clears the tire while closing the hard tonneau.

For more information regarding handling the spare, jacking and tire changing, etc., see the Owner's Manual.

HOMELINK™ UNIVERSAL TRANSMITTER

The HomeLink™ Transmitter is located in the center of the windshield header garnish. It provides a convenient way to consolidate the functions of up to three individual handheld transmitters into one built-in device. Once trained, the HomeLink™ Transmitter is designed to repeat both the frequency and the security code of the hand-held transmitters used for garage doors, security gates, or most radio frequency receivers. With the optional Lighting Package, home/office lighting systems, and security systems can be operated with the HomeLink™ Universal Transmitter.

Continuous power is supplied to HomeLink™ Transmitter by the vehicle's battery and charging system.

PROPER TRAINING TECHNIQUE

Caution
During this procedure, the system that you are training will be made to operate if it is within range of either the HomeLink™ or the hand-held transmitter. Make sure that people or objects are clear of the garage door, gate, etc. that you are training.

NOTE
The vehicle's engine should be turned off while training the transmitter.

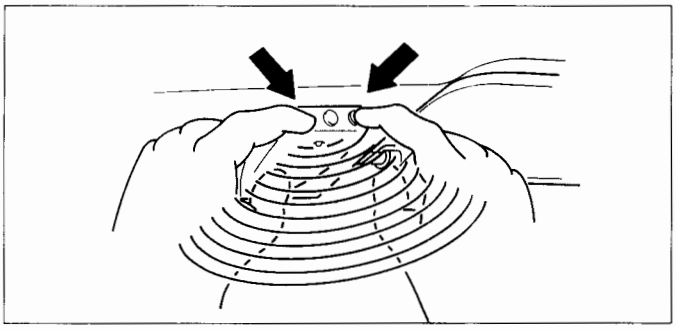

1. If you have previously trained this HomeLink™ Transmitter, proceed to Step 2. Hold down the outside two buttons on the HomeLink™ Transmitter until the red light begins to flash rapidly, then release both buttons.

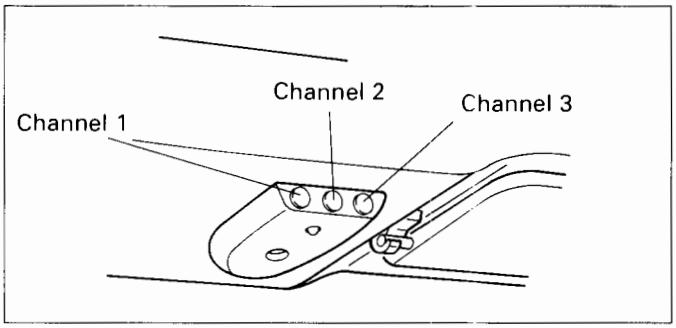

2. Decide which one of the three HomeLink™ channels you want to train.

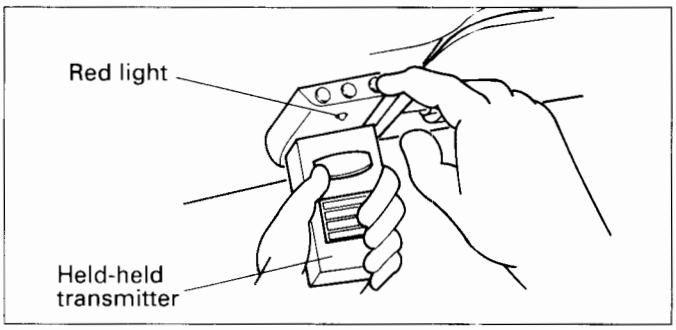

3. Hold the end of your hand-held transmitter against the bottom of the HomeLink™ Transmitter so that you can see the red light.

NOTE
In order to train, you must hold the handheld transmitter less than one inch from the HomeLink™ Transmitter.

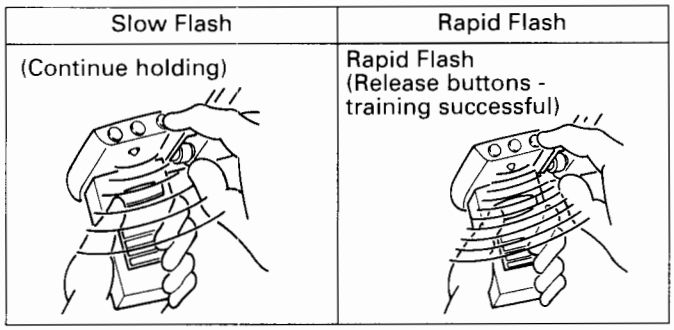

4. Press the desired HomeLink™ button until the red light flashes slowly. **Do not release the button.** Continue holding the button and press the hand-held transmitter button through Step 5.

5. Hold down both buttons until you see the red light on the HomeLink™ Transmitter flash rapidly (this may take 10-90 seconds). Then release both buttons.

TRANSMITTER COMPATIBILITY

If the HomeLink™ Transmitter has not indicated a successful train, note the brand name, model number, and frequency of the hand-held transmitter and refer to Table 1. Table 1 is a listing of all commonly known garage door opener transmitters, and identifies the different transmitters as compatible or not compatible with the HomeLink™ Transmitter.

- If the hand-held transmitter is identified in Table 1, is confirmed compatible to the HomeLink™ Transmitter and does not activate the receiver, refer to the diagnostic steps below.
- If the hand-held transmitter is identified in Table 1 and is confirmed not compatible to the HomeLink™ Transmitter, inform the customer of the problem and advise them to call HomeLink™ for product discounts on replacement garage door systems.
- If the hand-held transmitter is not identified in Table 1 and has not been successfully trained to the HomeLink™ Transmitter, contact HomeLink™ for technical assistance at 1-800-355-3515. Make sure you identify the brand name, model number, and frequency of the hand-held transmitter (if possible) for the HomeLink™ operator.

TRAINING PROBLEM DIAGNOSIS

- **NO SUCCESSFUL TRAIN INDICATION (INDICATOR LIGHT DOES NOT FLASH RAPIDLY) AND HOMELINK™ TRANSMITTER DOES NOT PROPERLY ACTIVATE RECEIVER**

If the HomeLink™ Transmitter does not train, please follow these steps to identify the cause of the problem.

1. Verify that the system (garage door opener, etc.) operates properly with the original transmitter.
2. Verify that the red light on the HomeLink™ Transmitter glows when any button is pushed. If the light glows,proceed to Step 4.
3 If the light does not glow, verify that battery power is available at the connector to the HomeLink™ Transmitter, replace the fuse and/or fix the vehicle wiring. If battery power is confirmed and the light still fails to operate, replace the HomeLink™ Transmitter with a new unit.
4. Verify that the hand-held transmitter has an effective battery. If a new battery is needed, replace and repeat training sequence.
5. Try reorienting the hand-held transmitter and repeating the training sequence. One effective way of reorienting is to touch a different side of the hand-held transmitter to the HomeLink™ Transmitter during training, i.e. place the opposite end of the handheld transmitter against the HomeLink™ Transmitter.
6. If the hand-held transmitter is confirmed compatible in Table 1 and does not properly activate the receiver after completing the above steps, then the HomeLink™ Transmitter may be defective and should be replaced. If the HomeLink™ has been previously replaced for the same problem, contact HomeLink™ at 1-800-355-3515 for additional assistance.

- **SUCCESSFUL TRAIN INDICATION (RAPID FLASH) BUT HOMELINK™ TRANSMITTER DOES NOT PROPERLY ACTIVATE RECEIVER**

NOTE
The effective range of the HomeLink™ Transmitter may differ from that of the original hand-held transmitter.

If the HomeLink™ Transmitter appears to have trained (rapid flash), but does not activate the system receiver, follow these steps to identify the cause of the problern:

1. Verify that the system (garage door opener, etc.) operates properly with the original transmitter.
2. Verify that the hand-held transmitter has an effective battery. If a new battery is needed, replace and repeat training sequence.
3. Try reorienting the hand-held transmitter and repeating the training sequence. One effective way of reorienting is to touch a different side of the hand-held transmitter to the HomeLink™ Transmitter during training, i.e. place the opposite end of the hand-held transmitter against the HomeLink™ Transmitter.
4. If the problem persists, and the hand-held transmitter is confirmed compatible in Table 1, then the HomeLink™ Transmitter may be defective and should be replaced. If the HomeLink™ Transmitter has been replaced for the same problem, contact HomeLink™ at 1-800-355-3515 for additional assistance.

NOTE
Should the vehicle be stolen, advise the customer to immediately retrain all their HomeLink™ programmed receiver codes in all applicable radio frequency appliances with their original hand-held transmitter.

TABLE 1

LIST OF TESTED GARAGE DOOR OPENERS

Brand Name	Manufacturer	Model #	FCC ID	Frequency MHZ	Train?	Comments	Need receiver verification?
Chamberlain	Chamberlain	G-3684	BYF8GKG3684	390	YES		
Chamberlain	Chamberlain	66LC	-	390	YES		
Crusader	Advance Industries	-	BSH8YN213	340	YES		
Genie	Genie	AT85-P	B8Q8KL	390	YES		
Genie	Genie	AT85	-	390	YES	AT85 @ 290MHZ may have problems like AT79 below.	
Genie	Genie	AT90	B8Q8KL	390	YES		
Genie	Genie	MAT85	B8Q8KL	390	YES		
Genie	Genie	MAT90	B8Q8KL	390	YES		
Genie	Genie	AT285P	B8Q8KL	390	YES		
Genie	Genie	AT95	B8Q8KL	390	YES		
Genie	Genie	AT35A	-	390	YES		YES
Genie	Genie	AT79	-	290	NO	"Oscillator is FM, too wide for data reception **"	
Genie	Genie	AT55	-	290	NO	"Oscillator is FM, too wide for data reception **"	
Genie	Genie	GWK	-	390	YES		
Heathkit	-	-	-	-	YES		
Jeckson	-	47-1001	ELY547-471001-T	315	YES		
Lift-A-Dor	Genie	LDT901	B8QGT50	390	YES		
Liftmaster	Chamberlain	G3466	132B873A	290	YES		
Liftmaster	Chamberlain	G3467	132B873A	400	NO	Illegal transmit frequency.	
Linear	Linear	DT-2A	CJF793	310	YES		
Linear	Linear	SNT00016	EF4793	304	YES		
Linear	Linear	EK11T	CJF793	290	YES		YES
Linear	Linear	SNT00016	EF4793	304	YES		
Linear	Linear	D-22B	CJF793	304	YES		
Linear	Linear	DT4	CJF794	310	YES		
Linear	Linear	SNT00048B	EFF4SNT00048B	304	YES		
Linear	Linear	MDT	EF4DNT00052	318	NO	Doesn't stay "on" long enough.	
Micom	International Dynamics	ESP-T9	ESP-T10	312	YES		
Micom	International Dynamics	ESP-T9	ESP-T10	312	YES		
CodeAble	Multi-Elmac (Stanley)	3010	BX79KG	300	YES		
Multi-Elmac	-	3089	-	300	YES		
Multi-Code	Stanley	-	A9K X Multicode	-	YES		
Multi-Code	Stanley	3070	BX79KGMICRO-10	300	YES		
Multi-Code	Stanley	3032	BX79KGT	300	YES		
Multi-Code	Multi-Elmac (Stanley)	1054	1054	250	NO	Illegal transmit frequency.	
Multi-Code	-	3034	-	300	YES		
Multi-Code	Stanley	3033	BX79KGT	300	YES		
Multi-Elmac	Multi-Elmac (Stanley)	1048	1048	250	NO	Illegal transmit frequency.	
Multi-Code	Stanley	3060	BX79KGMINI	299	YES		
Multi-Code	Multi-Elmac (Stanley)	1098	1098	301	YES		
Multi-Code	Martec	MK-1010	10-JCQMK-1010	300	YES		
Pulsar	Pulsar (Allister)	PDX9921	BPB83PXMIT	288	YES		
Allister	Pulsar (Allister)	ADX9931	BQA83XMIT	318	YES		
Allister	Pulsar (Allister)	ADX9932	BQA83XMIT	318	YES		
Allister	Pulsar (Allister)	ADX9933	BQA83XMIT	318	YES		
Allister	Pulsar (Allister)	ADX9934	BQA83XMIT	318	YES		
Allister	Pulsar (Allister)	ADX9935	BQA83XMIT	318	YES		
Allister	Pulsar (Allister)	ADX9936	BQA83XMIT	318	YES		

Brand Name	Manufacturer	Model #	FCC ID	Frequency MHZ	Train?	Comments	Need receiver verification?
Allister	-	20	-	340	NO	"Very Subtle FSK, can not distinguish"	
Sears	Sears	-	139-654020	-	YES		
Sears	Sears	-	139.664953	-	YES		
Sears	Sears	-	139.66403O	-	YES		
Sears	Sears	-	HBW3CQ139.53738	390	YES		
Sears	Sears	9B53718	-	390	YES		
Sears	Sears	9B53708	-	390	YES		
Shima	Shima	T-18B	-	304	YES	Must repeat button push to keep transmitter on.	
Shima	Shima	Style D	-	319	YES		
Stanley	Stanley	2986	-	310	YES		
Stanley	Stanley	1047	1047	310	YES		
Stanley	Stanley	1050	1050	310	YES		
Stanley	Stanley	1076	A9K9KG LMX	310	YES		
Stanley	Stanley	1079	A9K9KG LMX	310	YES		
Stanley	Stanley	1016	-	-	YES		
Stanley	Stanley	-	-	310	YES		
Stanley	Stanley	331-1052	A9K99G TPEN-1	310	YES		
Stanley	Stanley	1077	A9K9KG LMX	310	YES		
Telectron	Telectron	TP-21	-	230	NO	Outside of HomeLink™ operating band width.	
Telectron	Telectron	T-80	-	230	NO	Outside of HomeLink™ operating band width.	
Telectron	Telectron	T-80G	-	245	NO	Illegal transmit frequency.	
Telectron	Telectron	T-22A	-	247	NO	Illegal transmit frequency.	YES
Touch-n-Go	Advance Industries	-	BSH8YN205	360	YES		

"** Data stream and frequency is compatible, 3 samples found to be un-trainable due to wide band transmission."

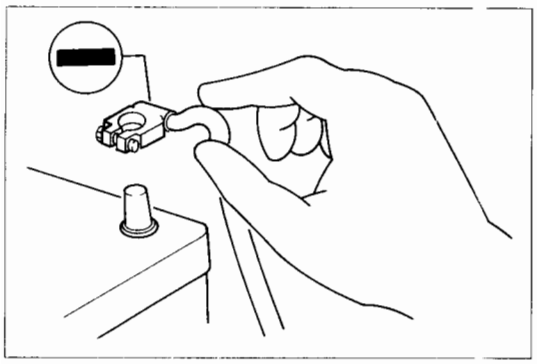

PRECAUTIONS BEFORE SERVICE

SERVICING THE ELECTRICAL SYSTEM

1. Before proceeding with work on the electrical system, the following must never be done:
   Unauthorized modifications of any electrical device or wiring, because such modifications might lead to a vehicle malfunction, over-capacity, or short circuit, that could possibly result in a vehicle fire.
2. When servicing the electrical system, disconnect the negative terminal from the battery.

Caution

1. **Before connecting or disconnecting the negative battery terminal, be sure to turn off the ignition switch and the lighting switch.**
2. **After completion of work steps, reconnect the negative battery terminal, warm up the engine, and allow the vehicle to idle for approximately 5 minutes under the conditions described below. This procedure will allow the vehicle's computer-controlled systems to stabilize.**

   Engine coolant temperature: 80 - 95° C (176 - 203° F)
   Lights, electric fans, accessories: OFF
   Transaxle: neutral position
   (A/T models: "N" or "P")
   Steering wheel: neutral (center) position

SERVICING OR ADJUSTING THE RETRACTABLE HARDTOP SYSTEM

Caution

Mechanical adjustments to, or replacement of components of the retractable hardtop system, with the exception of hard and soft trim, will require that the hardtop ECU be run through "auto-configuration" using the ASC INCORPORATED computerized diagnostic system. When applicable DO NOT perform any adjustment or replacement of those retractable hardtop components without having the latest version of the ASC INCORPORATED diagnostic system.

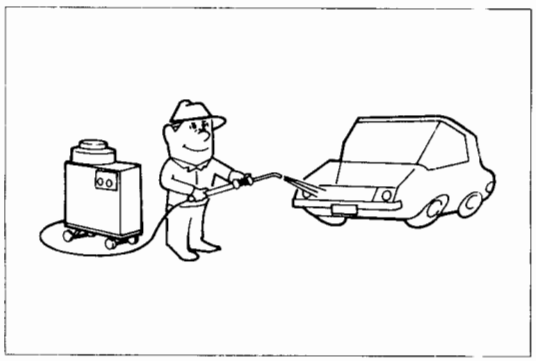

VEHICLE WASHING

If high-pressure car-washing equipment or steam car-washing equipment is used to wash the vehicle, avoid directing high pressure spray at the weatherstrips.

GENERAL DATA AND SPECIFICATIONS

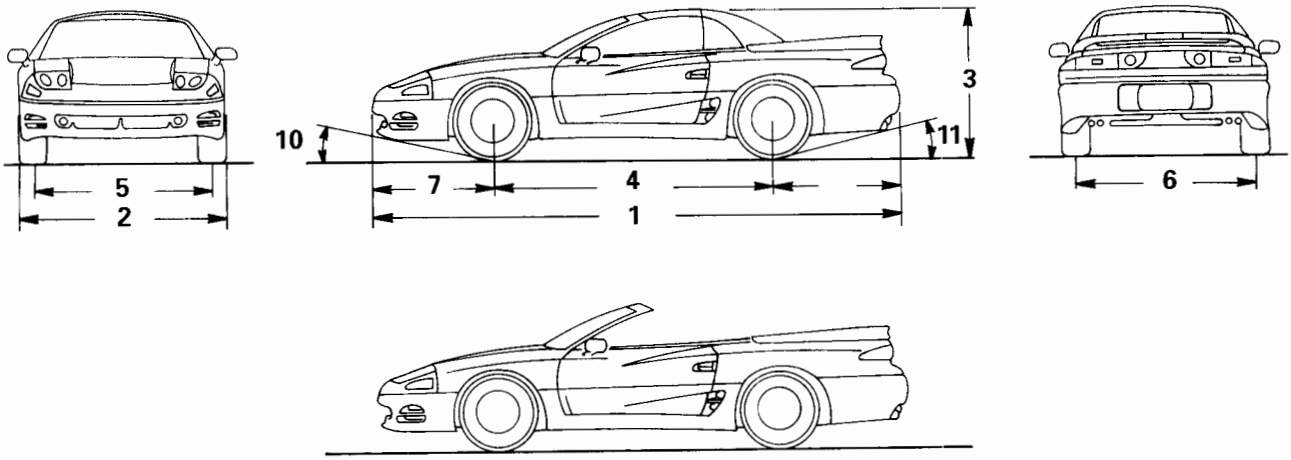

GENERAL SPECIFICATIONS

Items	Models		3000GT SL Spyder <DOHC> (Non-Turbo)	3000GT VR-4 Spyder <DOHC> (Turbo)
Vehicle dimensions mm (in.)				
Overall length		1	4,565 (179.7)	4,545 (178.9)
Overall width		2	1,840 (72.4)	1,840 (72.4)
Overall height		3	1,285 (50.6)	1,285 (50.6)
Wheelbase		4	2,470 (97.2)	2,470 (97.2)
Tread	Front	5	1,560 (61.4)	1,560 (61.4)
	Rear	6	1,580 (62.2)	1,580 (62.2)
Overhang	Front	7	1,025 (40.4)	1,025 (40.4)
	Rear	8	1,050 (41.3)	1,050 (41.3)
Minimum running ground clearance		9	145 (5.7)	145 (5.7)
Angle of approach degrees		10	12.2°	12.2°
Angle of departure degrees		11	16.9°	16.9°
Vehicle weight kg (lbs.)				
Curb weights				
M/T			1,450 (3,197)	1,725 (3,803)*
A/T			1,490 (3,285)	—
Gross vehicle weight rating			2,050 (4,519)	2,205 (4,861)
Gross axle weight rating				
Front			1,090 (2,403)	1,145 (2,524)
Rear			960 (2,116)	1,060 (2,337)
Seating capacity			4	4
For Engine and Transaxle Specifications, refer to Volume 1 of the Service Manual.				

NOTE
* <4WS>

LUBRICATION AND MAINTENANCE

The retractable hardtop system has been designed to provide reliable, maintenance-free service under normal driving conditions. This is accomplished by using specially formulated, self-lubricating, long wearing components.
Most of these components do not require lubrication. The only parts requiring periodic lubrication are the header latches, hard tonneau latches, and hard tonneau lifting mechanism slide tracks. Note that lubrication, where it is not required, may actually deteriorate the materials or attract dirt which could cause rapid wear and/or component breakage.

MAINTENANCE SCHEDULES

Due to the virtually maintenance-free design of the retractable hardtop system maintenance schedules are not required. Typically, wiping off the mechanism component with a clean damp cloth to remove dust and dirt is all that is needed.

SEVERE SERVICE

Vehicles operating under severe service conditions will require more frequent cleaning of system components under one or more of the following conditions:

Operation of the vehicle
(1) Driving in sandy areas
(2) Driving in salty areas
(3) Driving in dusty conditions

HARD TONNEAU AND RETRACTABLE HARDTOP HYDRAULIC SYSTEM FLUID

When it is necessary to re-fill the pump reservoir, hydraulic cylinders, hoses, or the entire hydraulic system, MIL-H-5606 **(AVIATION HYDRAULIC FLUID)**, or equivalent, can be used in the tonneau and hardtop hydraulic systems. Some examples of this aviation hydraulic fluid are Mobil Aero HFA, Aeroshell Fluid 4, or Royco 756. When it is necessary to top-off the reservoir, SAE 10W may be used.

As the name implies, the fluid must be an aviation-type fluid, not an automotive or other type. **DO NOT** use any other fluid or oils other than what is specified. Other types or weights of fluids or oils may slow operation, particularly during cold weather.

Generally, but not in all instances, if the hardtop ECU detects slower-than-normal operation (in this case due to using the wrong hydraulic fluid), it will set a diagnostic trouble code (DTC). The DTC can only be recovered using the ASC INCORPORATED computerized diagnostic system.

In addition to slowing operation, other oils may not be compatible with system components such as the O-ring seals.

Warning
When servicing the hydraulic system, use protective eyewear. Also, wear gloves and clothing that cannot be penetrated by the hydraulic fluid. If fluid contacts the skin, wash the area thoroughly with soap and water or waterless hand soap. Do not use gasoline, thinner, or solvents to clean the fluid from the skin.

LUBRICANTS - GREASES

Semi-solid lubricants bear the NLGI designation and are further classified as grades 0, 1, 2, 3, etc. Whenever "Chassis Lubricant" is specified, Multi-Purpose Grease, NLGI grade 2, should be used.

RECOMMENDED LUBRICANTS AND LUBRICANT CAPACITIES TABLE

RECOMMENDED LUBRICANTS

Items	Recommended Lubricants
Retractable hardtop hydraulic pump/motor	System factory-filled with MIL-H-5606 (AVIATION HYDRAULIC FLUID), or equivalent. For re-filling the pump reservoir, hydraulic cylinders, hoses, or the entire hydraulic system use Mobil Aero HFA, Aeroshell Fluid 4, or Royco 756, or equivalent. When topping-off the reservoir, SAE 10W may be used.
Hard tonneau pump/motor	
Quarter windows mechanisms	Multipurpose grease NLGI Grade 2
Header latch mechanism	
Hard tonneau slide mechanism	

LUBRICANT CAPACITIES TABLE

Description	Metric Measure (dm^3)	U.S. Measure
Retractable hardtop hydraulic system	.976 dm^3 (976 ml)	1.03 qt
Hard tonneau hydraulic system	.614 dm^3 (614 ml)	.65 qt

ELECTRONIC CONTROL SUSPENSION (ECS)

CONTENTS

ECS CONTROL UNIT (SPYDER-UNIQUE RELOCATION) **2**
Removal and Installation 2

ECS CONTROL UNIT (SPYDER-UNIQUE RELOCATION)

REMOVAL AND INSTALLATION

NOTE
Refer to Volume 1 of the Service Manual for more information.

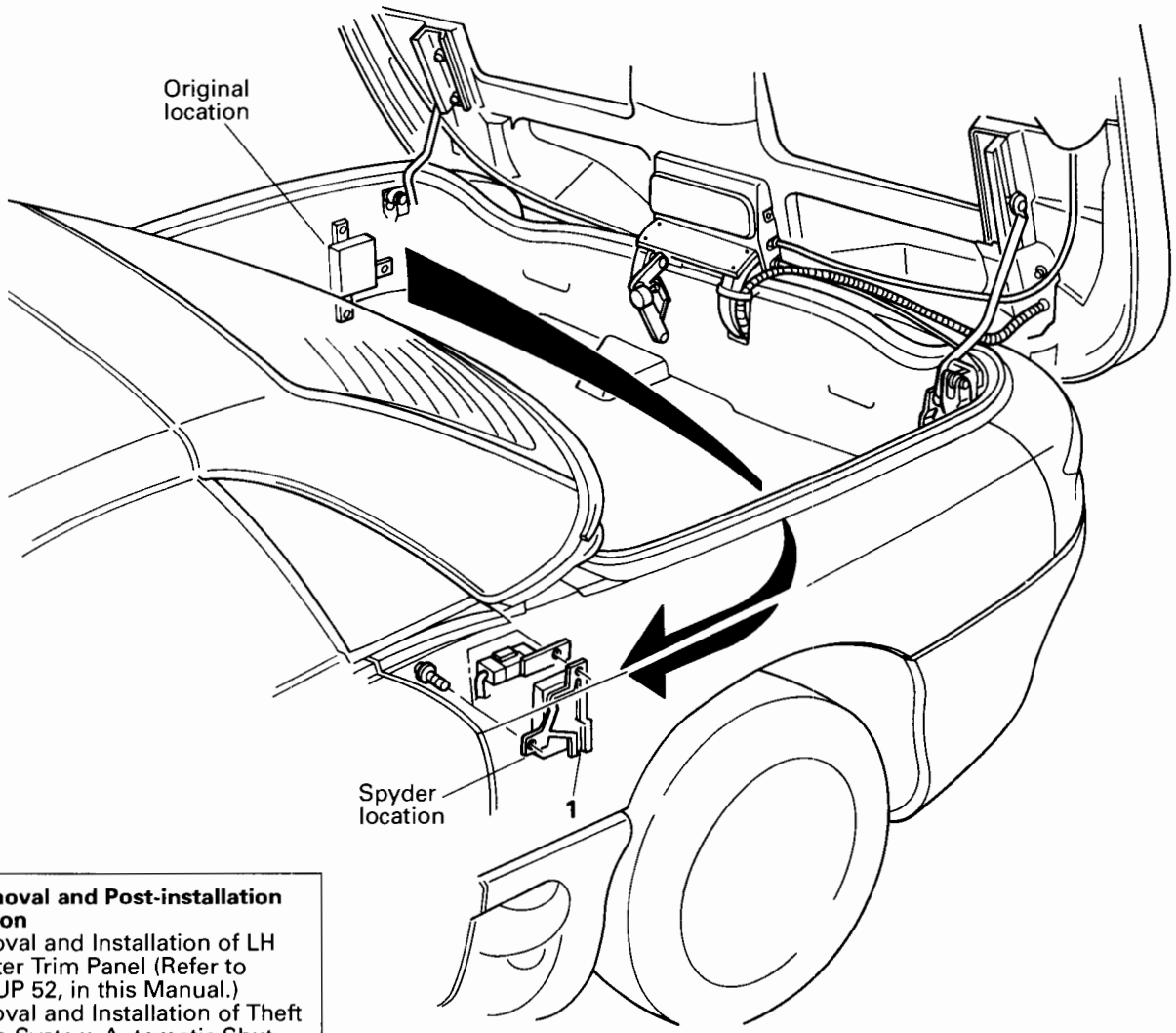

Pre-removal and Post-installation Operation
- Removal and Installation of LH Quarter Trim Panel (Refer to GROUP 52, in this Manual.)
- Removal and Installation of Theft Alarm System Automatic Shut-Off Unit and Keyless Entry Receiver Assembly (Refer to GROUP 54, in this Manual.)

NOTE
The ECS control unit mounting bracket for the Spyder has been modified. When replacing this part use the Spyder-unique service part.

Removal step

1. ECS control unit

SERVICE BRAKES

CONTENTS

ABS CONTROL UNIT (SPYDER-UNIQUE RELOCATION) 2
Removal and Installation 2

ABS ELECTRONIC CONTROL UNIT (SPYDER-UNIQUE RELOCATION)

REMOVAL AND INSTALLATION

NOTE
Refer to Volume 1 of the Service Manual for more information.

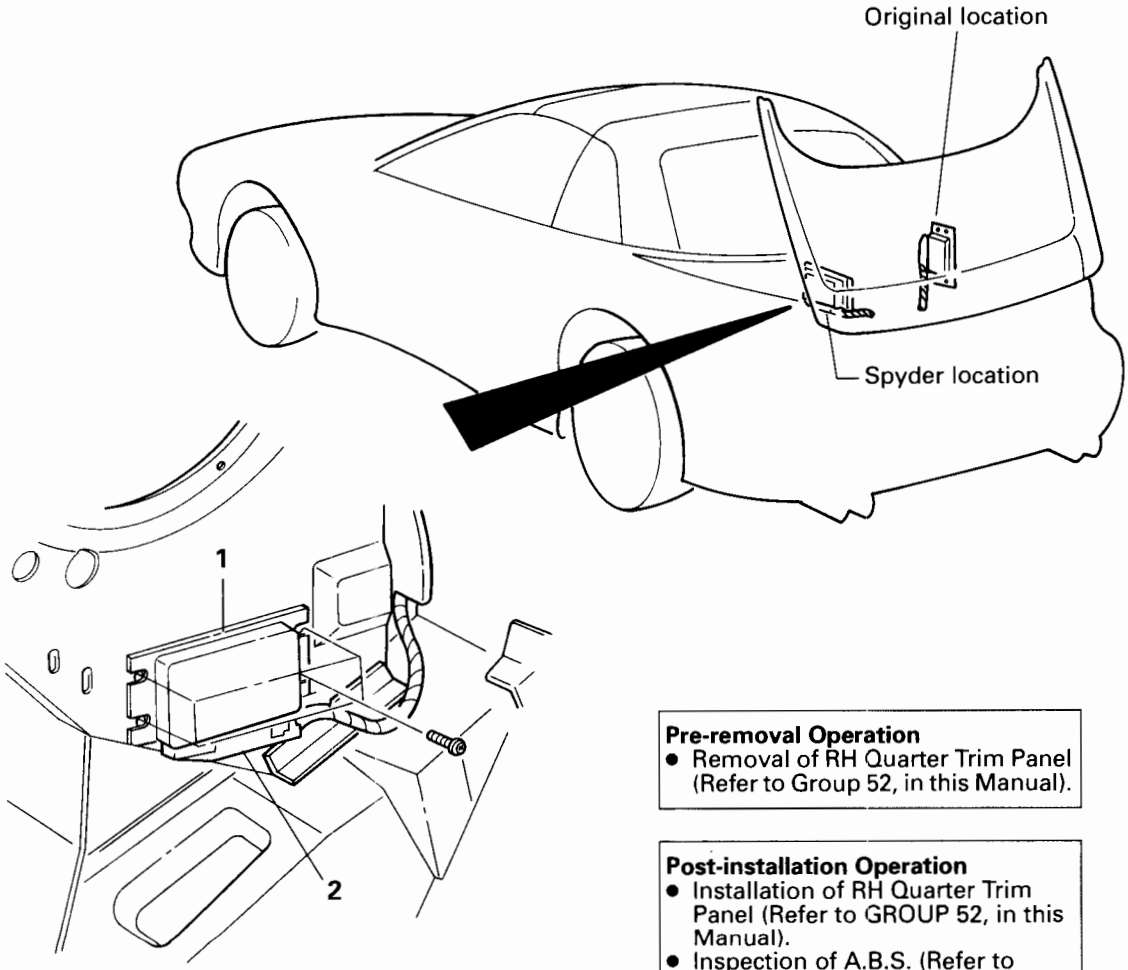

Pre-removal Operation
- Removal of RH Quarter Trim Panel (Refer to Group 52, in this Manual).

Post-installation Operation
- Installation of RH Quarter Trim Panel (Refer to GROUP 52, in this Manual).
- Inspection of A.B.S. (Refer to Volume 1 of the Service Manual).

Removal steps

1. Electronic control unit
2. ◆◆ Control unit connector connection

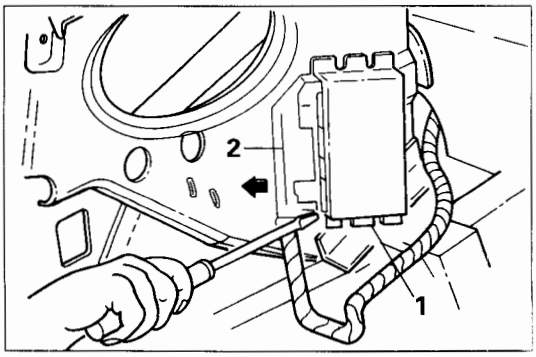

SERVICE POINT OF REMOVAL

2. REMOVAL OF CONTROL UNIT CONNECTOR

Carefully insert a screwdriver into the lock section as illustrated, and carefully pull out the connector from below.

BODY

CONTENTS

BODY DIMENSIONS AND MEASUREMENT METHODS **264**

BODY STRUCTURE
- ASC Incorporated Installed Parts 267
- Mitsubishi Installed Parts 266

CHIME MODULE AND TURN-SIGNAL AND HAZARD FLASHER UNIT **260**

DIAGNOSTICS AND TESTING **15**
- Auto-configuration 17
- Circuit Diagrams
  - Chime Module 144
  - Data Link Connector (DLC) 148
  - Driver Door Power Window System 138
  - Hard Tonneau Latch System 137
  - Hardtop and Hard Tonneau Control Switch 142
  - Hardtop and Hard Tonneau Hydraulic Pumps 147
  - Header Latch System 136
  - LEDs 145
  - Object-in-trunk Sensor 143
  - Passenger Door Power Window System 140
  - Potentiometers 146
  - Power Quarter Window 135
  - Retractable Hardtop Power Distribution and Control 134
- Configuration Diagrams
  - Interior 24
  - Luggage Compartment 26
  - Overall 23
- Diagnostic Trouble Code (DTC) Identification List 47
- ECU Connector Location and Terminal Disengagement 19-21
- Grounding Locations 18
- Inspection and Verification 32
- Notes and Terms 16,17
- Pinpoint Tests
  - No DTCs Present 49
  - With DTCs Present 75
- Recommended Wire Repair 22
- Retractable Hardtop Operation 29
- Symptom Chart
  - No DTCs Present 33
  - With DTCs Present 35
- Trouble Shooting Hints
  - No DTCs Present 41
  - With DTCs Present 43
- Warnings and Cautions 15
- Wire Color Codes 28

DOOR LOCATING PIN AND RECEIVER **240**

DOOR WINDOW RELAYS **239**

FRONT FENDER **219**
- Lower Fender Bracket 220

GENERAL INFORMATION **3**
- Description
  - About the Automatic Header Latch System 3
  - About the Hard Tonneau 3
  - About the Hardtop and Power Quarter Windows 3
  - About the Object-in-trunk Sensor 4
  - General Precautions 4
  - Overview 3

HARD TONNEAU **183**

HARD TONNEAU HYDRAULIC SYSTEM PUMP/MOTOR **193**

HARD TONNEAU HYDRAULIC SYSTEM PUMP/MOTOR AND CYLINDERS **190**

HARD TONNEAU LATCH SYSTEM **188**

HARD TONNEAU MECHANISM **186**

HARD TONNEAU POSITION SENSOR (POTENTIOMETER) **195**

HARD TONNEAU SEQUENCE OF OPERATION
- Closing 8
- Opening 7

HARDTOP AND HARD TONNEAU CONTROL SWITCH **257**

HARDTOP ELECTRONIC CONTROL UNIT (ECU) **263**

HYDRAULIC SYSTEM BLEEDING
- Acceptable Levels of Trapped Air Bubbles 215
- Hard Tonneau System Bleeding 216
- Hardtop System Bleeding 216
- Pre-bleeding Notes 215

HYDRAULIC SYSTEM DIAGRAMS **214**

OBJECT-IN-TRUNK SENSOR **261**

CONTINUED ON NEXT PAGE

QUARTER WINDOW **233**
Drive Cable 235
Position Sensor 237
Window 233
RETRACTABLE HARDTOP ASSEMBLY **200**
RETRACTABLE HARDTOP, FRONT ROOF PANEL **197**
RETRACTABLE HARDTOP HYDRAULIC SYSTEM PUMP/MOTOR **213**
RETRACTABLE HARDTOP HYDRAULIC SYSTEM PUMP/MOTOR AND CYLINDERS **209**
RETRACTABLE HARDTOP POSITION SENSOR (POTENTIOMETER) **207**
RETRACTABLE HARDTOP SEQUENCE OF OPERATION
Closing 6
Opening 5
ROOF GLASS **224**
General
Glass Wipe, Primers, Adhesive and Glass Installation Items 221
Replacement of Moulding (Bonding Type) 222
SEALANT AND ADHESIVES
Rear Roof Glass 10
Weatherstrips 10
SERVICE ADJUSTMENT PROCEDURES **149**
Door Locating Pin 181
Front Rail Weatherstrip and Holder 170
Hard Tonneau 171
Tonneau Flipper Doors 179
Tonneau Hinge 171
Tonneau Latches 171
Tonneau Manual Release System 178
Hard Tonneau Position Sensor (Potentiometer) 182
Power Quarter Window 162
Quarter Window 164
Quarter Window Cables, Synchronization of 163
Quarter Window Guiding System (Rudder) 166
Quarter Window Position Sensors 168
Retractable Hardtop Assembly 149
Retractable Hardtop Down Stop 158
Down Stop Height Adjustment 158
Down Stop Lock Adjustment 159
Retractable Hardtop Position Sensor (Potentiometer) 182
Retractable Hardtop System, Adjustment of 151
Adjustment Points 157
Gap Between Front and Rear Roof Panels 153
Hardtop Flushness to Windshield Header 152
Hardtop Locator Pins 151
Hardtop Roof Crown 154
Hardtop Roof Lock-up Before Closing 152
Hardtop Upstops 151
Header Latch Garnishes 151
Weatherstrips, All Hardtop Related 151
Windshield Header Power Latch System 160
Latch Actuator Adjustment 160
Latch Height Adjustment 161
SPECIAL TOOLS **12**
SPECIFICATIONS **9**
General 8
Sealants and Adhesives 10
WEATHERSTRIP **242**
A-pillar Weatherstrip Holder 242
Front Rail 248
Front Rail Weatherstrip Holder 248
Hard Tonneau 246
Hardtop 250
Hardtop Weatherstrip Holder 250
Quarter Window Sash Seal 244
Rear Rail Inner 252
Windshield Header 242
Windshield Header Weatherstrip Holder 242
WINDSHIELD HEADER POWER LATCH SYSTEM **254**

GENERAL INFORMATION

DESCRIPTION

Overview

The retractable hardtop system is actually composed of five separate systems that work in unison. The systems are as follows:

- retractable hardtop
- power quarter windows
- automatic header latch system
- hard tonneau
- object-in-trunk sensor (trunk floor)

The hard tonneau and hardtop have their own electric, motor-driven pumps that actuate hydraulic cylinders. An electronic control unit (ECU) controls all electrical functions of the hardtop system. In addition this includes lowering and raising of the door window glass when operating the hardtop.

Manual transaxle-equipped vehicles have the ECU connected to the vehicle speed sensor and the parking brake switch. This prevents operation of the retractable hardtop or the hard tonneau if the vehicle is moving 3-5 mph or more. Automatic transaxle-equipped vehicles have the ECU connected to the PARK switch and the speed sensor. Operating the hardtop and/or hard tonneau while the vehicle is in motion is hazardous. Never operate the hardtop and/or tonneau while the vehicle is in motion. In addition, always set the parking brake before operating the hardtop or hard tonneau. The retractable hardtop system should only be operated with the ignition switch in the "ON" position and with the engine running.

About the Hardtop and Power Quarter Windows

The retractable hardtop consists of two composite roof panels hinged where the panels join and also at the body. A mechanized rear shelf panel that rests above the rear seatbacks is forward when the hardtop is closed. When the hardtop is open, the shelf panel moves back to cover the gap at the hard tonneau. In an emergency, the hardtop can be closed manually by bypassing the hydraulic pump. Opening the hardtop manually should only be performed by trained service personnel. The retractable hardtop system has a "one-touch" (or single-switch) system, with a built-in delay safety feature when closing the hardtop. This allows the operator to make sure nothing is between the header and the hardtop when it closes.

During operation of the hardtop, the quarter windows automatically retract into the sides of the rear roof panel. The quarter windows cannot be operated independently of hardtop operation; they move to full open (retracted) position when the hardtop is opened, and full closed when the hardtop is closed. The door windows can be operated after the retractable hardtop operation is complete.

About the Automatic Header Latch System

The windshield header contains the automatic latch system. The dual latches are driven by a single electric motor controlled by the ECU. The latches may be manually operated in an emergency by removing the HomeLink™ Universal Transmitter and using a standard 1/4" square drive ratchet and extension to drive the motor. A special combination HomeLink™ Transmitter removal and installation tool/header latch wrench is provided. It is located inside the CD changer compartment. When operating the header latches manually, always be sure to remove the wrench from the header latch motor immediately. Otherwise personal injury may result if the tool is not removed and the hardtop switch is pressed.

About the Hard Tonneau

The hard tonneau covers the hardtop when it is open, and covers the stowage area when the hardtop is closed. The tonneau is a one-piece composite with a serviceable fixed spoiler and center high mount

stop light. It is hinged at the rear, opening from the front. Twin, cable-actuated, gear motor-released latches (with manual release), secure the hard tonneau. The hard tonneau may be operated independently of the hardtop by means of the hard tonneau "OPEN"/"CLOSE" switch. It can be operated only with the ignition switch in the "ON" position. The hard tonneau cannot be opened independently if the hardtop is open; the switch is electrically locked-out. The hard tonneau system should only be operated with the engine running.

About the Object-In-Trunk Sensor

The object-in-trunk sensor consists of two electrically conductive grids separated by an insulator, and laminated together to form a pressure-sensitive mat. The mat is bonded to a rigid board and covered with a low-pile carpet. A short pigtail connector on the mat connects to the rear harness in the luggage compartment floor box. The object-in-trunk sensor must be connected for the hardtop system to operate, as the ECU can detect if the sensor is not connected. When the object-in-trunk sensor is disconnected, the hardtop system is restricted.

The purpose of the object-in-trunk sensor is to prevent the hardtop (or objects) from being damaged if an object is within the hardtop stowage area when the hardtop is being stowed. When opening the hardtop, and an object is detected in the hardtop stowage area, the hardtop will only open halfway and not proceed until the object is removed. Similarly, if an object is within the stowage area or placed in there while the hardtop is operating, but is not heavy enough to be detected, and the hardtop contacts it while opening, the hardtop will reverse direction and stop halfway closed until the object is removed.

General Precautions

During normal system operation, a chime and visual warning indicator lights (next to the hardtop and hard tonneau control switches) alert the vehicle occupants that the hardtop is not fully open or closed, or that the tonneau is not fully closed. When a problem is encountered by the system, the chime and indicators will sound and flash at twice the normal rate. The chime will sound for 1 second to indicate that the opening or closing of the hardtop is complete. When the tonneau closes the chime and indicator turn off (no 1 second chime like the hardtop) to indicate closing of the hard tonneau is complete.

The system should only be operated when the vehicle is stationary, the transmission is in "PARK" (A/T) or Neutral (M/T), the parking brake set, and the engine is idling. If the battery becomes discharged (battery voltage below 10 volts), the system's ECU will not permit the hardtop or hard tonneau to operate. If the battery voltage exceeds 16 volts, the system's ECU will shut down until the voltage drops to 16 or lower.

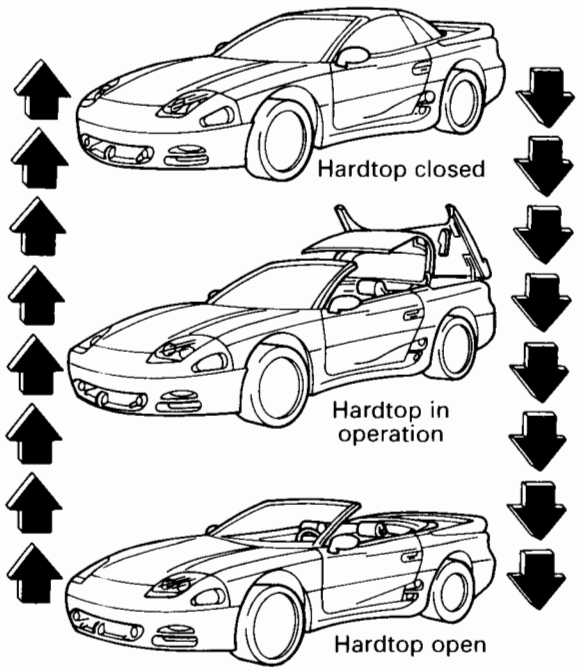

TSB Revision

RETRACTABLE HARDTOP SEQUENCE OF OPERATION - OPENING

Conditions:

- Hardtop and hard tonneau completely closed and latched
- Ignition "ON" with engine running at idle
- Transmission in "PARK" (A/T) or "Neutral" (M/T)
- Parking brake set
- Vehicle battery fully charged
- All vehicle accessories off
- All items or packages removed from hardtop stowage area

NOTE

(1) If the hardtop "OPEN" switch is released before the hardtop is fully open, the hardtop stops in mid-movement. Pressing the switch a second time causes the hardtop to continue the opening cycle. Whenever the hardtop "OPEN" switch is pressed, released, and pressed again, an audible sound may be heard as the hard tonneau latch motors release and reset.

(2) System operational time may vary due to conditions such as vehicle age and condition, ambient temperature (affecting oil viscosity), battery condition, and level of hardtop ECU software.

Time lapse tolerance +20/-10 seconds

1. Press and hold the "HARDTOP OPEN" switch.	
Time Lapse:	Operation
0.0 sec to 4 sec:	• Chime and indicator light comes on and stays on until the end of the hardtop open cycle. • Door windows open and quarter windows retract.
4 sec to 11 sec:	• Hard tonneau and header latches unlatch. • Hard tonneau pump/motor starts and raises the hard tonneau to the full open position and turns off.
10 sec to 18 sec:	• Hardtop pump/motor starts and moves the hardtop to the fully open position and turns off.
18 sec to 25 sec:	• Hard tonneau pump/motor starts and moves the hard tonneau to the fully closed and latched position and turns off. • One second chime sounds indicating the completion of the hardtop open cycle. • Chime and indicator turn off.
2. Release the switch.	

RETRACTABLE HARDTOP SEQUENCE OF OPERATION - CLOSING

Conditions:

- Hardtop completely opened and hard tonneau closed and latched
- Ignition "ON" with engine running at idle.
- Transmission in "PARK" (A/T) or "Neutral" (M/T)
- Parking brake set
- Vehicle battery fully charged
- All vehicle accessories off

NOTE

(1) If hardtop "CLOSE" switch is released before the hardtop is fully closed, the hardtop stops in mid-movement. Pressing the switch a second time causes the hardtop to continue the closing cycle.

(2) System operational time may vary due to conditions such as vehicle age and condition, ambient temperature (affecting oil viscosity), battery condition and level of hardtop ECU software.

Time lapse tolerance +20/-10 seconds

1. Press and hold the "HARDTOP CLOSE" switch.	
Time Lapse:	Operation
0.0 sec to 5 sec:	• Chime and indicator light comes on and stays on until the end of the hardtop close cycle. • Hard tonneau latches release and the hard tonneau opens to the full open position.
5 sec to 16 sec:	• Hardtop pump/motor starts and raises the hardtop to the safety stop approximately 270 mm (10 inches) from the header and stops.
0 sec to 6 sec:	• Hardtop switch must be pressed a second time. • Hardtop closes and latches. • Hard tonneau pump/motor starts the tonneau to the close position. • Hard tonneau closes and latches.
6 sec to 11 sec:	• Quarter windows and door windows extend and close. • One second chime sounds indicating the completion of the hardtop close cycle. • Chime and indicator turn off.
2. Release the switch.	

HARD TONNEAU SEQUENCE OF OPERATION - OPENING

Conditions:

- Hard tonneau closed and latched.
- Ignition "ON" with engine running at idle.
- Transmission in "PARK" (A/T) or "Neutral" (M/T)
- Parking brake set
- Vehicle battery fully charged
- All vehicle accessories off
- Hardtop closed (hard tonneau will not operate with the hard tonneau switch if hardtop is stowed)

NOTE

(1) If hard tonneau "OPEN" switch is released before the hard tonneau is fully open, the hard tonneau stops in mid-movement. Pressing the switch a second time causes the hard tonneau system to continue to the open position. Whenever the hard tonneau "OPEN" switch is pressed, released and pressed again, an audible sound may be heard as the hard tonneau latches release and reset.

(2) System operational time may vary due to conditions such as vehicle age and condition, ambient temperature (affecting oil viscosity), battery condition and level of hardtop ECU software.

Time lapse tolerance +10/-5 seconds

1. Press and hold the "HARD TONNEAU OPEN" switch.	
Time Lapse:	Operation
0.0 sec to 7 sec:	• Chime/indicator light comes on and stays on until the hard tonneau is closed and latched. • Hard tonneau latches release. • Hard tonneau pump/motor starts and moves the hard tonneau to the fully open position.
2. Release the switch	

HARD TONNEAU SEQUENCE OF OPERATION - CLOSING

Conditions:

- Hard tonneau completely open
- Ignition "ON" with engine running at idle
- Transmission in "PARK" (A/T) or "Neutral" (M/T)
- Parking brake set
- Vehicle battery fully charged
- All vehicle accessories off
- Hardtop closed (hard tonneau will not operate with the hard tonneau switch if hardtop is stowed)

NOTE

(1) If the hard tonneau "CLOSE" switch is released before the hard tonneau is fully closed, the hard tonneau stops in mid-movement. Pressing the switch a second time causes the hard tonneau to continue the closing cycle.

(2) System operational time may vary due to conditions such as vehicle age and condition, ambient temperature (affecting oil viscosity), battery condition, and level of hardtop ECU software.

Time lapse tolerance +10/-5 seconds

1. Press and hold the "HARD TONNEAU CLOSE" switch.	
Time Lapse:	Operation
0.0 sec to 6 sec:	• Chime/indicator light comes on and stays on until the hard tonneau is closed and latched. • Hard tonneau pump/motor starts and moves the hard tonneau to the full closed position. • Hard tonneau latches latch. • Chime and indicator turn off.
2. Release the switch	

SPECIFICATIONS

GENERAL SPECIFICATIONS

Items	Specifications
Roof (retractable hardtop)	
Type	2-piece molded composite, folding, self-storing, hydraulically actuated (spring assisted) with manual bypass and rigid headlining
Locking system	Two electrically operated, mechanical latches through retractable hardtop ECU logic interlock
Retractable hardtop "CLOSE OPEN" switch	
Type	SPDT rocker
Rated load current A	20
Rated voltage DC	12
Retractable hardtop hydraulic pump/motor	
Type	Permanent magnet type (built-in circuit breaker)
Normal operating voltage DC	10-16
Run current A	25
Bound current A	50
Direction of rotation	Clockwise and counter-clockwise
Windshield header latch system	
Type	Mechanical, single-motor, dual opposing gear racks
Windshield header latch motor	
Type	Permanent magnet type (built-in circuit breaker)
Run current A	8
Bound current A	18
Direction of rotation	Clockwise and counter-clockwise
Hard tonneau	
Type	2-piece composite, rear hinged, front opening type, hydraulically actuated with manual bypass
Locking system	Dual, cable actuated latches with electric gear motor release, and remote manual release, via cable
Hard tonneau "CLOSE/OPEN" switch	
Type	SPDT rocker
Rated load current A	20
Rated voltage DC	12
Hard tonneau hydraulic pump/motor	
Type	Permanent magnet type (built-in circuit breaker)
Normal operating voltage DC	10-16
Run current A	13
Bound current A	50
Direction or rotation	Clockwise and counter-clockwise
Hard tonneau latch	One latch per side, cable-actuated, gear motor-released with integrated limit switch, and manual release provision
Door	
Locating system (anti-rattle)	Spring-loaded pin-in-receiver
Glass installation method	
Roof window glass	Adhesive
Quarter window glass	Fasteners
Glass installation method	
Roof window glass	Adhesive
Quarter window	Fasteners

Items	Specifications
Glass thickness mm (in.) Rear roof glass Quarter window glass	 4.0 ± 0.3 (0.15 ± 0.01) 5.0 ± 0.3 (0.19 ± 0.01)
Power quarter window Type	 Retracting (beetle-wing style), single switch operation (with retractable hardtop ECU logic interlock), single motor drive, dual cable actuated, non-independently operated (windows synchronized with each other)
Power quarter window motor Type Run current A Bound current A Direction of rotation	 Permanent magnet type (built-in circuit breaker) 8.0 18.0 Clockwise and counterclockwise

SEALANT AND ADHESIVES

Items	Specified sealant	Remarks
Rear roof glass	BETASEAL 57502 urethane adhesive	Use only BETASEAL 57502 urethane adhesive
Weatherstrips	3M SUPER WEATHERSTRIP ADHESIVE 08008, or equivalent Butyl tape	

SPECIAL TOOLS

ASC tool number and tool name	Supersession	Application
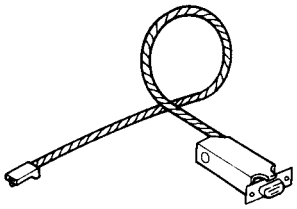 ASC p/n E-45X8-T005-CXXX Cable from vehicle to ISO convertor box	Available only through ASC	Diagnosis and troubleshooting of hardtop electrical system
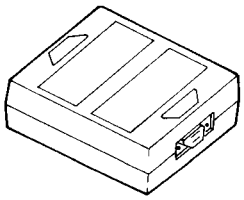 ASC p/n E-4568-T003-BXXX ISO 9141 convertor box		
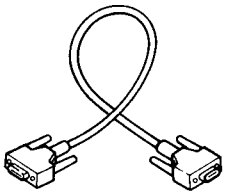 ASC p/n E-45X8-T004-CXXX Cable from convertor to PC		
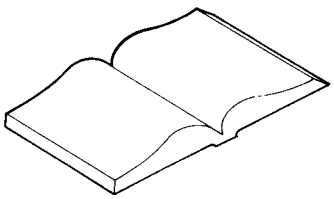 ASC p/n E-45X8-T002-BXXX PC User's Manual		
Personal computer		
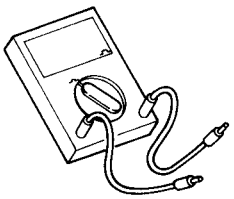 Digital VOM		

AMP tool number and tool name	Application
AMP p/n 726503-1 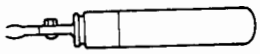	ECU connector F-124 large terminal extraction tool
AMP p/n 726534-1 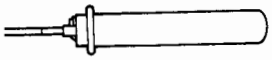	ECU connector F-124 small terminal extraction tool
AMP p/n 872070-1 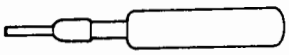	ECU connectors F-123 and F-125 terminal extraction tool

NOTES

Observe ALL Cautions and Warnings in Removal and Installation, and Adjustment procedures.

Warning!

(1) Depending on system malfunction and/or diagnostic procedure, inadvertent operation of the hardtop and/or hard tonneau may occur. For example: if one circuit to hard tonneau pump/motor is shorted to ground or voltage and you connect the other circuit to ground or voltage, hard tonneau may close.

ALWAYS stay clear of hardtop and hard tonneau moving components when diagnosing and/or operating system.

Caution

(1) Make sure both retractable quarter windows are retracted before opening hardtop. DO NOT open the hardtop if BOTH retractable quarter windows do not fully retract.

(2) When opening the retractable hardtop, always make sure there are no items or packages in the hardtop stowage area. Even a small article could scratch the hardtop's finish or damage the hardtop, glass windows or mechanisms. Personal injury could result.

(3) The retractable hardtop stowage area has an object-in-trunk sensor that will restrict operation of the hardtop system if certain articles are within the hardtop stowage area. Object shape, size, material or placement may affect detection. ALWAYS check the hardtop stowage area for items when opening the hardtop.

(4) Once the retractable hardtop is opened and stowed do not place any cargo in or around it.

(5) Make sure the hardtop and hard tonneau are closed and latched; driving with hardtop or hard tonneau partially open is hazardous.

(6) Never operate the retractable hardtop or the hard tonneau while the vehicle is in motion.

(7) To avoid damage, do not sit or place excessive weight on the hard tonneau or the trim panels above the rear seat backs.

(8) When opening and closing the hardtop or hard tonneau keep hands and any part of the body away from moving parts, such as the flipper doors (located at the front ends of the hard tonneau) and along where the hard tonneau seals to the vehicle body.

(9) When MANUALLY operating hardtop and/or hard tonneau the weight and/or the position of the hardtop and/or hard tonneau may cause it to continue movement.

(10) Depending on the nature of the concern when operating hardtop and/or hard tonneau, the weight and/or position of the hardtop and/or hard tonneau may cause it to continue movement. Turning bypass valve to POWER position MAY NOT stop movement of hardtop and/or hard tonneau, for example; if hydraulic system leaks, or if hydraulic cylinders are damaged.

READ ALL OF THE FOLLOWING NOTES AND TERMS BEFORE PROCEEDING.

NOTE:

1. Refer to Volume 2 of the Service Manual General Section for How to Diagnose, How to Read Configuration Diagram, and How to Read Circuit Diagrams.

2. For information that may be needed that is not contained in this Service Manual, Refer to Volume 1 and/or 2 of Service Manual.

3. Make sure hardtop and hard tonneau mechanical adjustments are correct before performing electrical diagnostics.

4. Make sure that the vehicle battery is fully charged and in good condition before performing diagnostics.

5. Inspect system fuses and ground connections before performing diagnostics.

6. If fuses are blown, do not immediately replace them, refer to Inspection and Verification.

7. Intermittent DTCs may occur, DTCs must be active (high-lighted on PC screen) to properly diagnose. It may be necessary to move wiring harnesses and/or individual wires (wiggle) for DTCs to become active. DO NOT replace components if DTCs are not active.

8. When recovering Diagnostic Trouble Codes (DTCs) from the Electronic Control Unit (ECU) using the Personal Computer (PC) write down all DTCs that are in the mernory. Some DTCs may occur as a result of other failures the ECU has seen.

9. Turn ignition switch to the OFF position after each test unless instructed to leave it in the ON position.

10. Manual operation of the hardtop or hard tonneau may be required to gain access to some components for diagnosing.

11. Wire harness and/or component connectors that are identified with pin locations on them, shall use that numbering system, and not the standard Mitsubishi numbering system.

12. Circuit numbers for the retractable hardtop system are on the circuit diagrams listed vertically on the wires.

13. With the ignition switch on, the ECU uses a high reference voltage (1.7-2.5 vdc, typically 2.1 vdc), and a low reference voltage (0.5-0.9 vdc, typically 0.7 vdc), provided to each of the position switches (this allows the ECU to know which position the switch is in), the ECU must not be in the sleep mode (end of cycle completely up or down) while testing for these voltages. The easiest way to keep the ECU awake is to raise the tonneau. If the tonneau is cycled closed to allow quarter windows to extend, or the header latch motor to latch, the ECU can be awakened by operating the tonneau with the hard tonneau switch.

14. In the Pinpoint Tests, normal testing for the resistance of a good wire with an ohmmeter should

have a value of 3 ohms or less. However, this may vary depending on the ohmmeter used, the length and size of the wire, the use of jumper wires for testing, the amount of connectors in the wire, etc. If a value much larger is found (e.g. 10 ohms), the wire and/or connectors may be suspect to loose connections, corrosion, and/or damage.

15. Under certain fault conditions, it may be necessary to cycle the ignition to the OFF position, and then back to the ON position, to resume hardtop operation.

16. Refer to Quick Reference Chart at the back of this Service Manual for Hatchback to Retractable hardtop wiring harness connector changes.

17. Refer to Configuration diagrams and Removal and Installation procedures for component locations.

DEFINITION OF TERMS

AUTO-CONFIGURATION

Refers to resetting of parameters of hardtop and hard tonneau movement in the ECU by use of a PC and the latest version of the ASC Incorporated software. It may be necessary to service and clear DTCs before auto-configuration can be performed. Refer to PC User's Manual for details on running Auto-Configuration.

DAMAGED

Refers to a mechanically or electrically inoperative component.

RESTORE VEHICLE

Is to install or connect components that were removed or disconnected for testing purpose.
DTCs should not be cleared from the ECUs memory until all recorded DTC's have been resolved.
The system MUST be run through AUTO-CONFIGURATION whenever a repair is made or a part is replaced. Refer to PC User's Manual.

RETEST SYSTEM

Is to check for additional concerns after the original concern has been verified and repaired. This may involve checking for DTCs and/or operating the system and checking for proper operation.

GROUNDING LOCATIONS

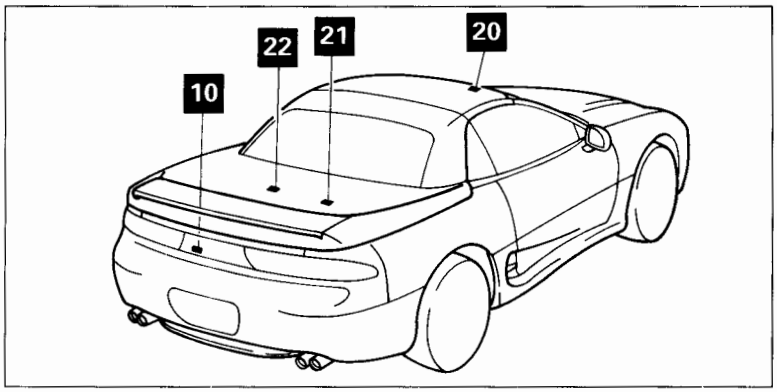

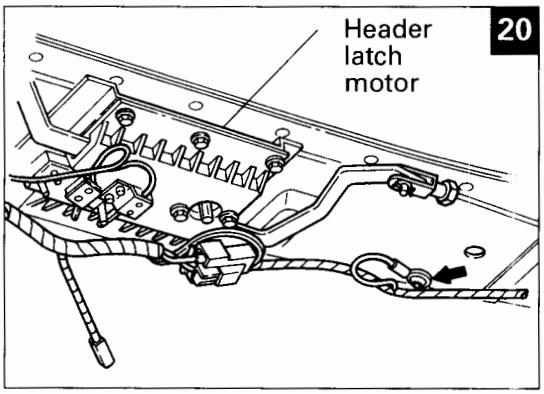

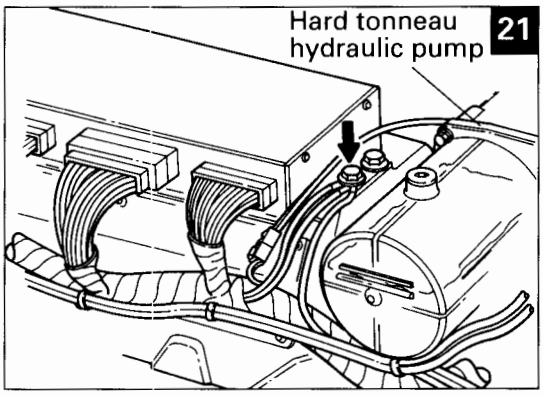

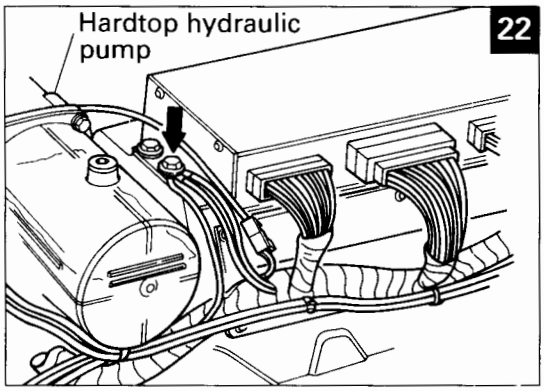

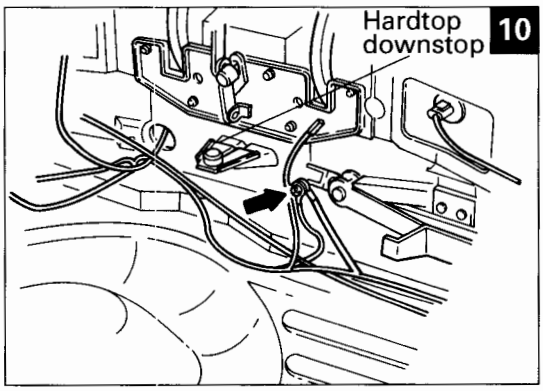

ECU CONNECTOR LOCATION

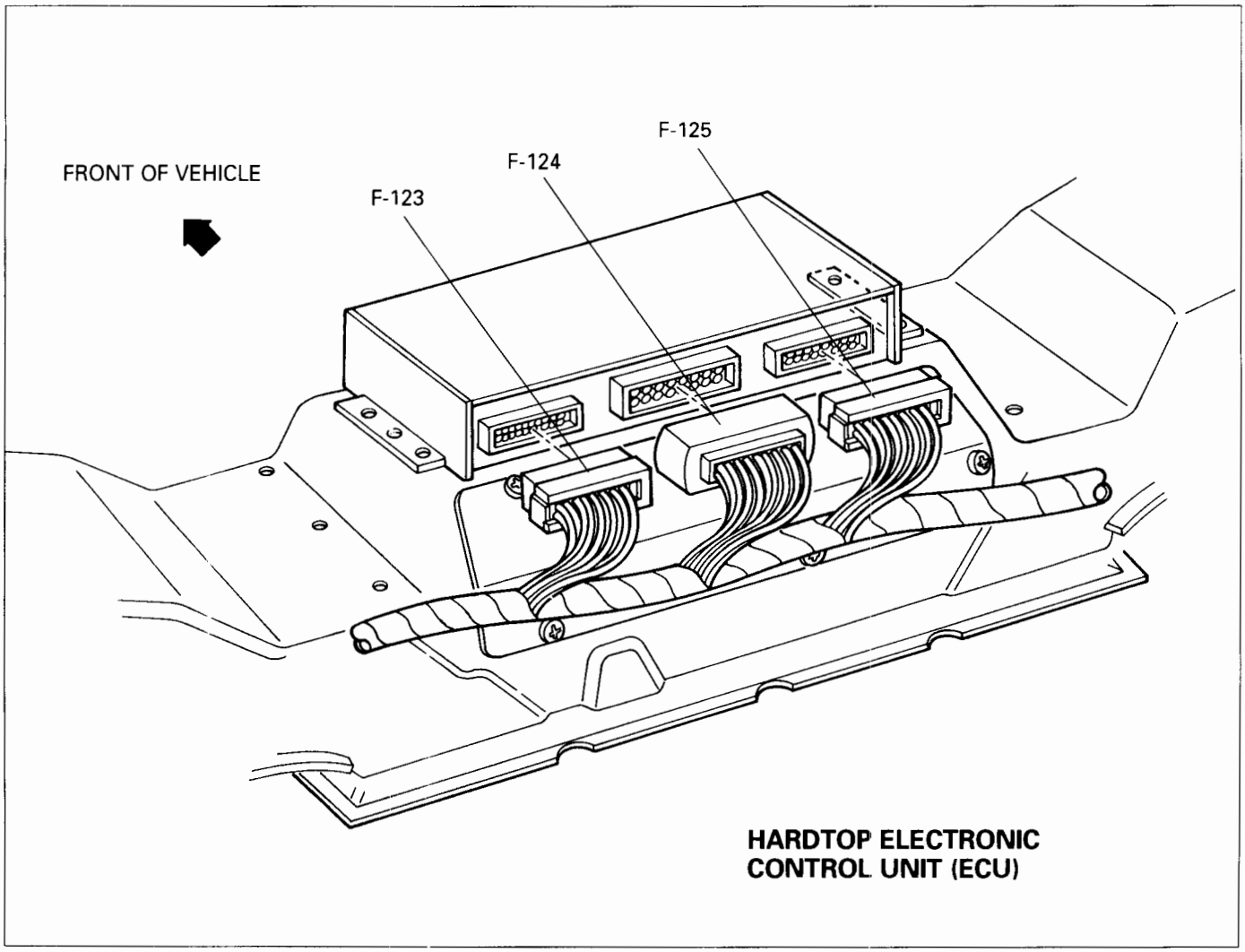

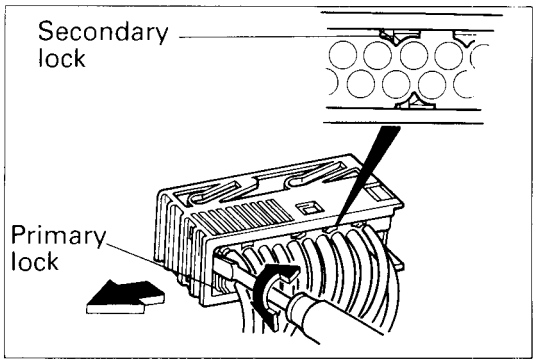

ELECTRONIC CONTROL UNIT (ECU) CONNECTOR TERMINAL DISENGAGEMENT

ECU CONNECTOR F-125 AND F-123

1. Insert screwdriver into LH side of connector, between lock and connector and rotate screwdriver, then slide lock to LH side to disengage connector.

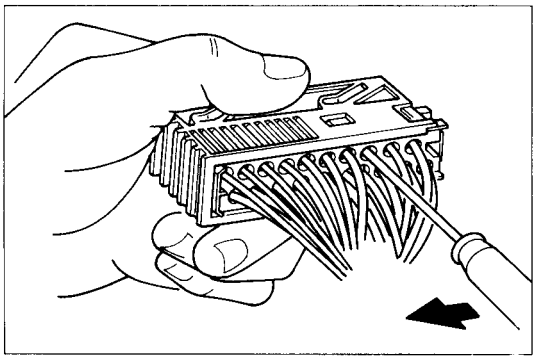

2. With connector removed, grasp the connector and insert a small screwdriver into an empty cavity and pry sideways to release the secondary lock.

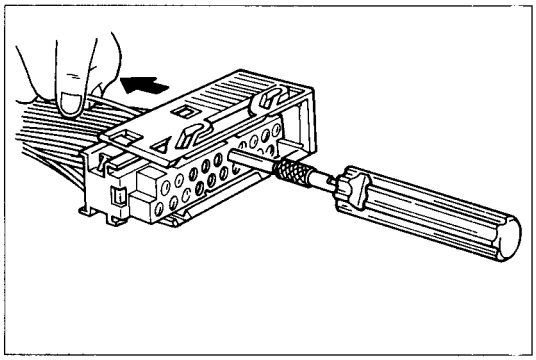

3. Using AMP tool number 0-0872070-1 or equivalent, insert tool straight into face of connector to disengage locking tabs on wire terminal, and pull wire and terminal from connector.

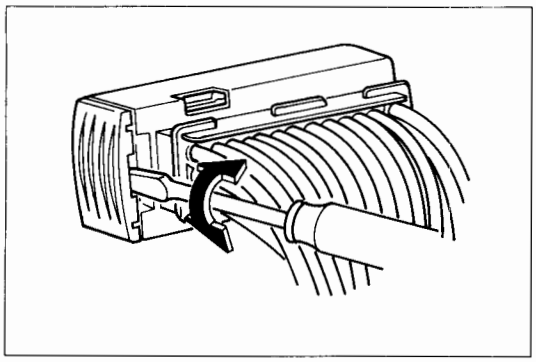

ELECTRONIC CONTROL UNIT (ECU) CONNECTOR TERMINAL DISENGAGEMENT

ECU CONNECTOR F-124

1. Insert screwdriver into LH side of connector, between lock and connector and rotate screwdriver, then slide lock to LH side to disengage connector.

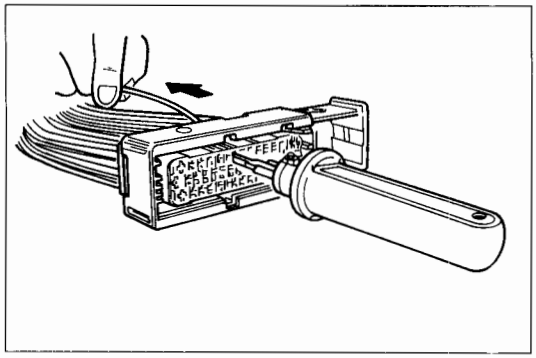

2. Using AMP tool number 726534-1 for small terminals, 726503-1 for larger terminals or equivalent, insert tool straight into face of connector to disengage locking tabs on wire terminal, and pull wire and terminal from connector.

RECOMMENDED WIRE REPAIR PROCEDURE

A seal splice can be easily installed using a standard insulated crimp tool and a heat gun. The seal splices are color coded for easy identification of gauge sizes, and are transparent for visual inspection of the final repair.

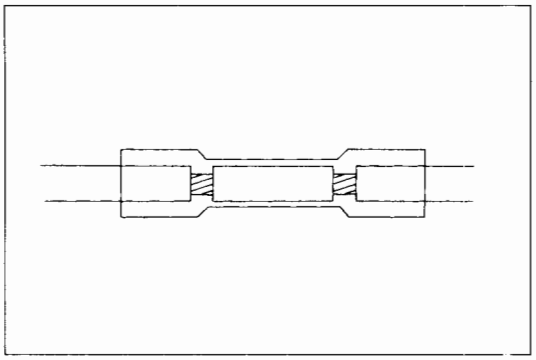

1. Strip the wire ends 7.6 mm (0.3 inch) and insert into crimp barrel.

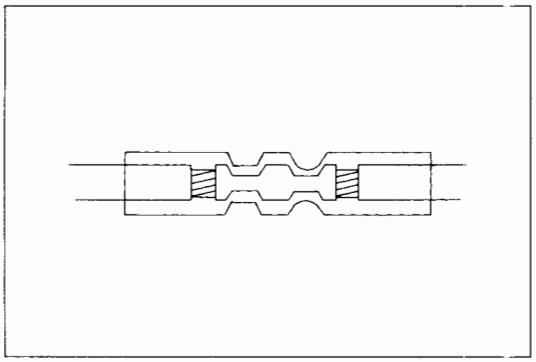

2. Push wires firmly into crimp barrel while crimping barrel.
3. Grasp seal splice and wire, and pull gently to ensure proper connection.

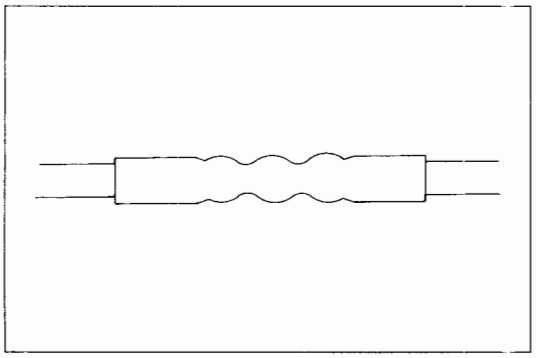

4. Heat splice with heat gun until tubing shrinks and adhesive flows from each end of seal splice.

OVERALL CONFIGURATION DIAGRAM

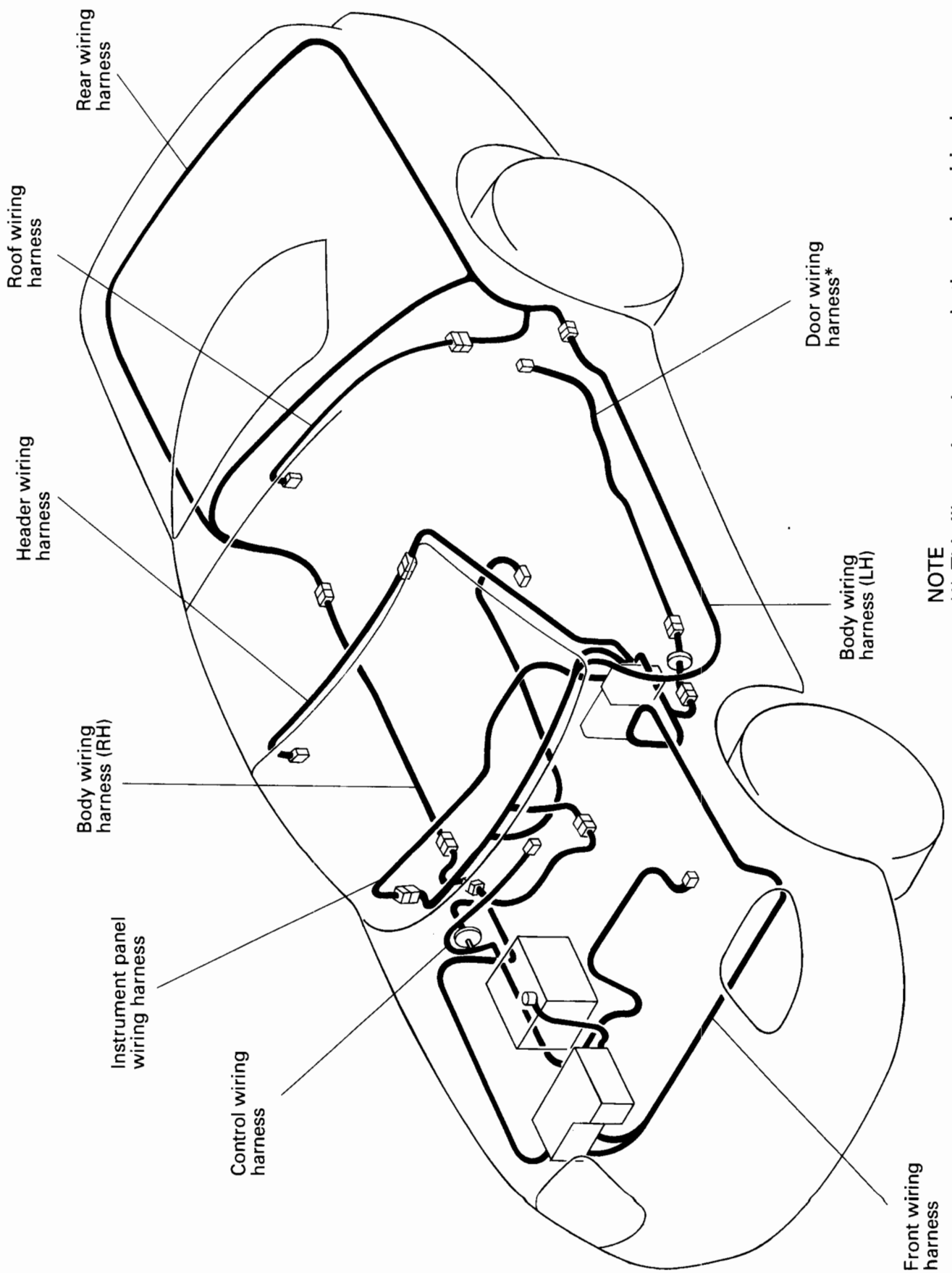

NOTE
(1) This illustration shows only the major wiring harness.
(2) * indicates also equipped at the right side.

INTERIOR

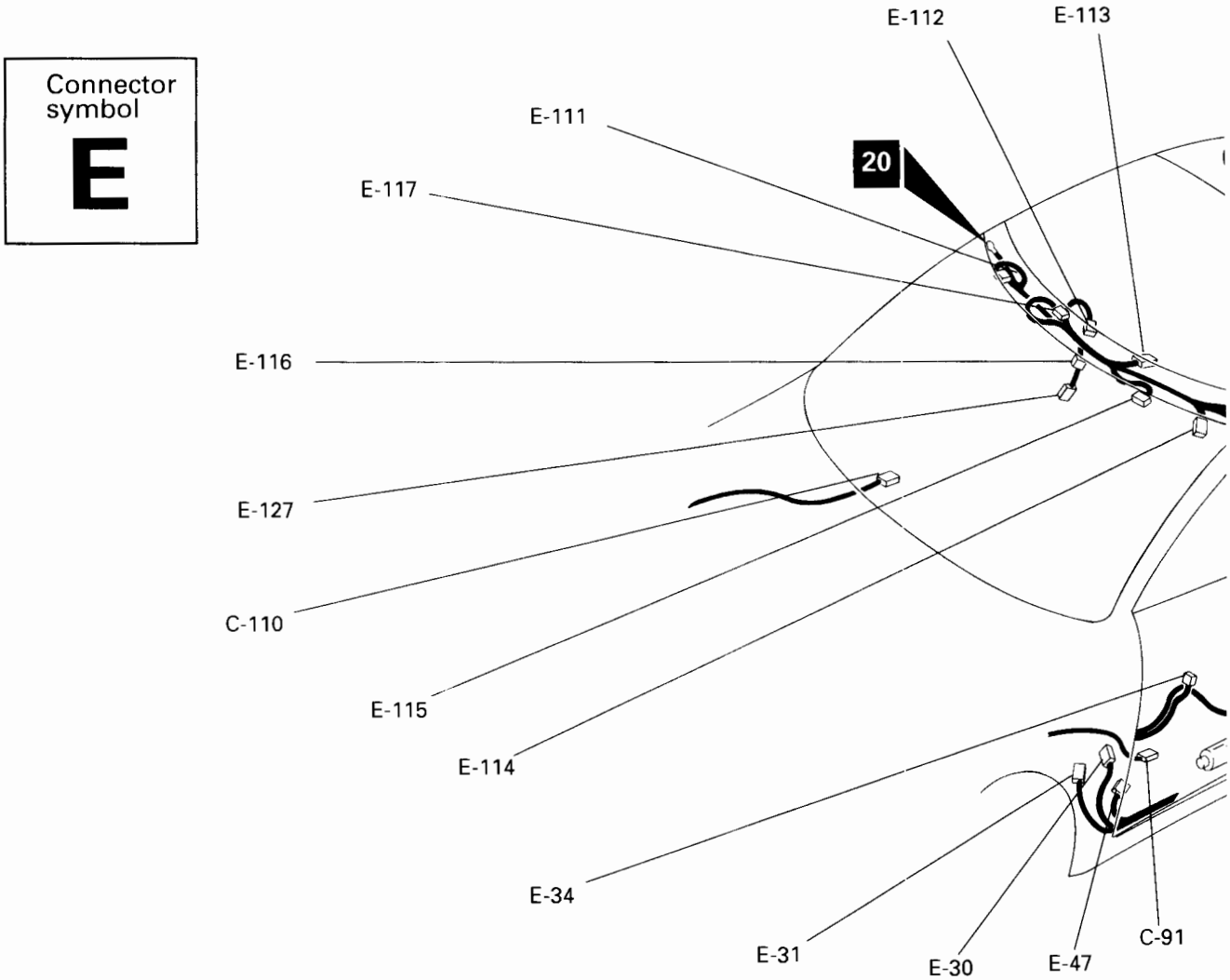

C-91	Data Link Connector (DLC) Retractable hardtop
C-10	Battery supply to hardtop ECU.
E-01	MMC (refer to Volume 2)*
E-02	-
E-03	MMC (refer to Volume 2)*
E-04	MMC (refer to Volume 2)*
E-05	MMC (refer to Volume 2)*
E-06	MMC (refer to Volume 2)*
E-07	-
E-08	MMC (refer to Volume 2)*
E-09	MMC (refer to Volume 2)*
E-10	MMC (refer to Volume 2)*
E-11	MMC (refer to Volume 2)*
E-12	MMC (refer to Volume 2)*
E-13	MMC (refer to Volume 2)*
E-14	MMC (refer to Volume 2)*
E-15	MMC (refer to Volume 2)*
E-16	MMC (refer to Volume 2)*
E-17	MMC (refer to Volume 2)*
E-18	MMC (refer to Volume 2)*
E-19	MMC (refer to Volume 2)*
E-20	MMC (refer to Volume 2)*
E-21	MMC (refer to Volume 2)*
E-22	MMC (refer to Volume 2)*
E-23	MMC (refer to Volume 2)*
E-24	MMC (refer to Volume 2)*
E-25	Door light (LH)
E-26	MMC (refer to Volume 2)*
E-27	MMC (refer to Volume 2)*
E-28	MMC (refer to Volume 2)*
E-29	MMC (refer to Volume 2)*
E-30	Turn signal and hazard flasher unit
E-31	Diode (for MFI circuit)
E-32	MMC (refer to Volume 2)*
E-33	MMC (refer to Volume 2)*
E-34	Power window main switch
E-35	Power window motor
E-36	MMC (refer to Volume 2)*
E-37	MMC (refer to Volume 2)*
E-38	MMC (refer to Volume 2)*
E-39	MMC (refer to Volume 2)*
E-40	MMC (refer to Volume 2)*
E-41	MMC (refer to Volume 2)*

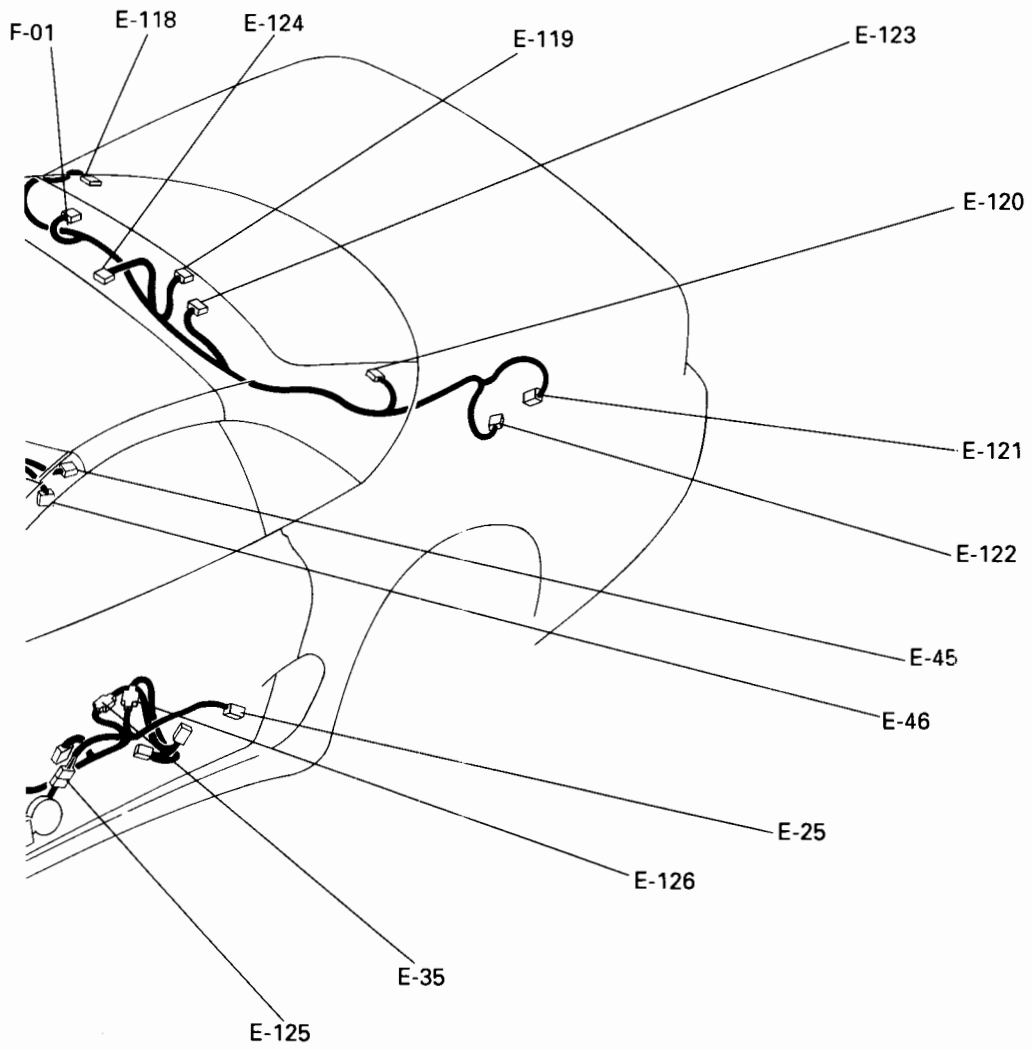

E-42 MMC (refer to Volume 2)*
E-43 MMC (refer to Volume 2)*
E-44 MMC (refer to Volume 2)*
E-45 Body to Header harness (LH)(6 way)
E-46 Body to Header harness (LH)(9 way)
E-47 Chime Module (retractable hardtop)
E-110** Not used
E-111 Header position switch (RH)
E-112 HomeLink™ Universal transmitter
E-113 Header unlatch switch
E-114 Header position switch (LH)
E-115 Header latch switch
E-116 Rearview mirror (self dimming and lighted)
E-117 Header latch motor
E-118 Defogger (neg)
E-119 Retractable quarter window retract switch
E-120 Defogger (pos)
E-121 Roof harness to rear harness (four way connector)
E-122 Roof harness to rear harness (eight way connector)
E-123 Retractable quarter window extend switch
E-124 Retractable quarter window motor
E-125 Drivers window relay to power window motor
E-126 Drivers window relay to power window main switch
E-127 Jumper to mirror (from E-116)(P.I.A. mirror)
F-01 Interior temperature sensor

* Connectors (not shown) are in Mitsubishi wiring harness and are used on retractable hardtop.

** Connectors numbered 110 and higher are new connectors in ASC Inc. wiring harnesses for retractable hardtop.

LUGGAGE COMPARTMENT

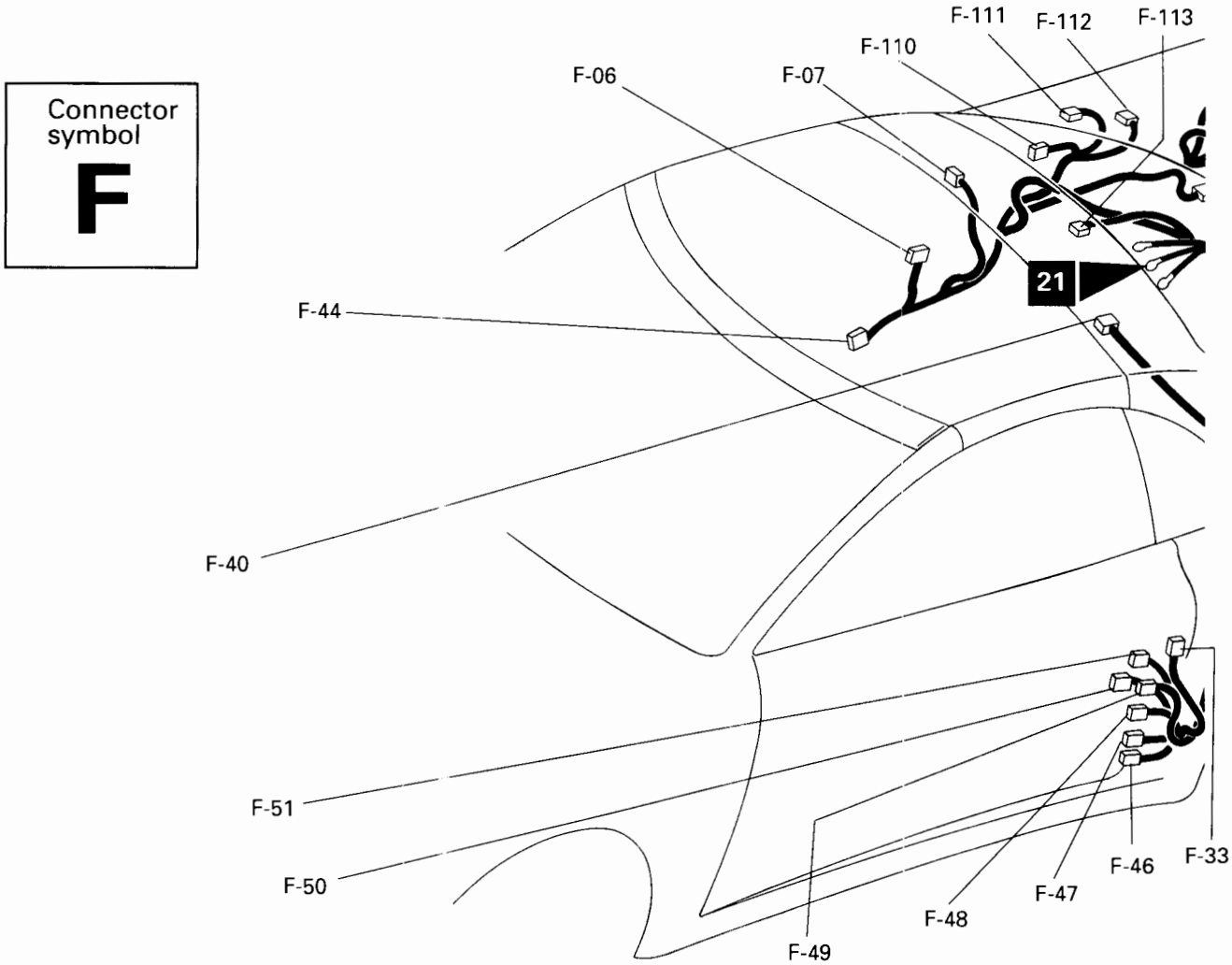

E-121**	Roof harness to rear harness (four way connector)
E-122	Roof harness to rear harness (eight way connector)
F-01	Refer to Configuration Diagram E
F-02	Changed to E-120 (refer to Configuration Diagram E)
F-03	-
F-04	High mounted stop light
F-05	Changed to E-118 (refer to Configuration Diagram E)
F-06	Rear speaker (RH)
F-07	ECS rear shock absorber (RH)
F-08	Luggage compartment lamp
F-09	-
F-10	Rear combination light (RH)
F-11	Back up light (RH)
F-12	MMC (refer to Volume 2)*
F-13	MMC (refer to Volume 2)*
F-14	Rear wiring harness (RH) and fuel tank wiring harness combination
F-15	-
F-16	Fuel tank
F-17	License plate light (RH)
F-18	Rear wiring harness (RH) and rear bumper wiring harness combination
F-19	-
F-20	-
F-21	License plate light (LH)
F-22	Changed to F-116
F-23	-
F-24	-
F-25	Back up light (LH)
F-26	-
F-27	-
F-28	-
F-29	-
F-30	Rear combination light (LH)
F-31	Changed to A-79, MMC (refer to Volume 2)*
F-32	ECS rear shock absorber (LH)
F-33	Rear speaker (LH)
F-34	-
F-35	-
F-36	-
F-37	-
F-38	-
F-39	-

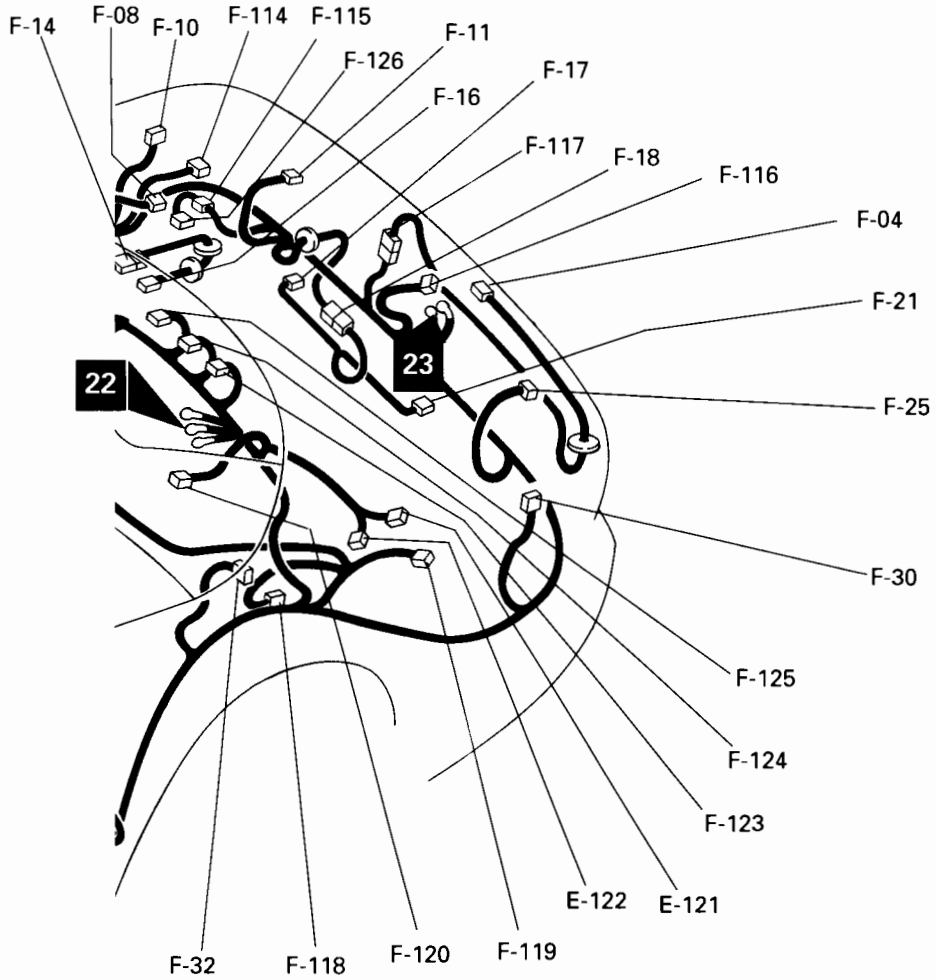

F-40	CD changer
F-41	-
F-42	-
F-43	-
F-44	Body wiring harness (RH) and rear wiring harness combination (22 way)
F-45	-
F-46	Body wiring harness (LH) and rear wiring harness combination (17 way)
F-47	Body wiring harness (LH) and rear wiring harness combination (4 way)
F-48	Body wiring harness (LH) and rear wiring harness combination (19 way)
F-49	Body wiring harness (LH) and rear wiring harness combination (8 way)
F-50	Body wiring harness (LH) and rear wiring harness combination (2 way)
F-51	Body wiring harness (LH) and rear wiring harness combination (13 way)
F-110	Hardtop potentiometer
F-111	Hard tonneau latch switch (RH)
F-112	Hard tonneau latch motor (RH)
F-113	Hard tonneau drive motor
F-114	Hard tonneau potentiometer
F-115	Object in trunk sensor to rear harness (jumper)
F-116	Luggage compartment lamp switch
F-117	High mounted stop light to rear harness
F-118	Hard tonneau latch motor (LH)
F-119	Hard tonneau latch switch (LH)
F-120	Hardtop drive motor
F-121	Not used
F-122	Not used
F-123	ECU window motors and tonneau control
F-124	ECU low current (control)
F-125	ECU high current
F-126	Object in trunk sensor

* Connectors (not shown) are in Mitsubishi wiring harness and are used on retractable hardtop.

** Connectors numbered 110 and higher are new connectors in ASC Inc. wiring harnesses for retractable hardtop.

WIRE COLOR CODES

Wire colors are identified by the following color codes.

Code	Wire color	Code	Wire color
B	Black	PL	Purple
BR	Brown	R	Red
G	Green	SB	Sky blue
GR	Gray	T	Tan
L	Blue	V	Violet
LG	Light green	W	White
O	Orange	Y	Yellow
P	Pink	–	–

NOTE
If a cable has two colors, the first of the two color code characters indicates the basic color (color of the cable coating) and the second indicates the marking color.

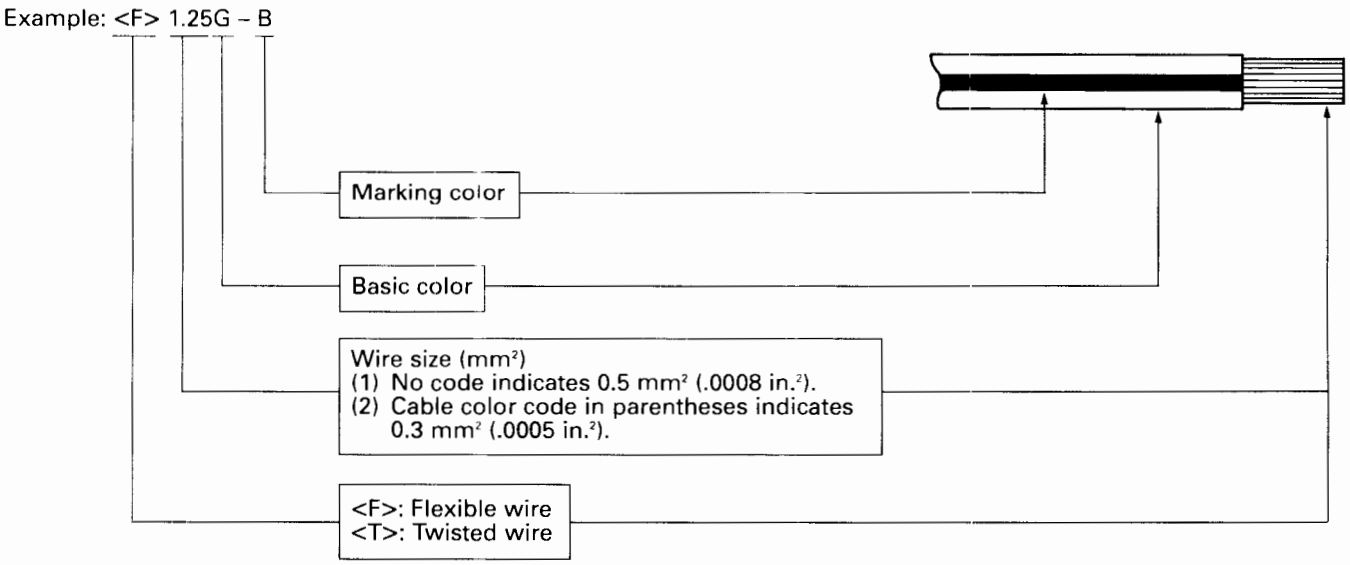

RETRACTABLE HARDTOP OPERATION

OPENING THE HARDTOP

The Electronic Control Unit (ECU) for the Mitsubishi 3000GT Spyder retractable hardtop is a self-contained computer. All electrical functions of the hardtop system are controlled by the ECU.

Power is supplied to the ECU through a 60-amp fuse in the junction box in the engine compartment. The ECU has a sleep mode. When no power is supplied to the ECU from the ignition circuit, or at the completion of its full cycle (either close or open) the ECU goes to sleep. This allows the ECU to draw minimal power from the battery.

The high-current grounds and the electronic logic ground are supplied through the vehicle chassis.

The following is the sequence of events for the retractable hardtop to move from the fully closed position, to the fully open position, under normal conditions:

- The hardtop is in the fully closed position;
- Header latches are latched;
- Quarter windows are closed;
- Door windows are in any position;
- Tonneau is latched;
- Hardtop stowage area is empty;
- Vehicle in Park (A/T) or Neutral (M/T);
- Hand brake is applied.

To open the hardtop, start the vehicle. Power is then supplied to the ECU from the ignition circuit. At this time the ECU will go through internal diagnostics that will check its internal memory and circuits and will monitor all hardtop and tonneau switches and sensors. If the internal circuitry is found fully operational and the hardtop or tonneau control switch is not pressed, then the ECU will go to sleep waiting for movement of the hardtop, tonneau or passenger side door window switch.

With the engine running and hardtop control switch pressed to the OPEN position, power is supplied to the ECU from the hardtop control switch, and this awakens the ECU. During normal hardtop operation the Light Emitting Diodes (LEDs) flash. The chime will sound at the same rate as the LED flash. The hardtop LEDs and chime will continue to operate as long as the tonneau is not latched and the ignition is turned to the ON position.

The ECU supplies power to the driver and passenger's side door window motors, and quarter window motor to drive them to the open position.

Once the quarter windows have been retracted the quarter window limit switch sends a signal to the ECU and power is supplied to drive the header latch motor to the fully unlatched position. The header latch motor will continue to move until the header latch limit switch indicates a fully unlatched position. Power is also supplied to the tonneau latch solenoids to pull the release cables, which releases the tonneau latches. Power is then supplied to the tonneau pump motor. This raises the tonneau allowing the hardtop to retract into the hardtop stowage area.

Once the potentiometer located on the tonneau lift mechanism senses a position where there is enough clearance for the hardtop, the hardtop pump motor will begin to move the hardtop to the open position.

If sufficient pressure from an object is detected in the hardtop stowage area by the object-in-trunk sensor, the hardtop operation is restricted and can only open halfway, and the chime and LEDs will respond at twice the normal rate. In the event that an object does not apply sufficient pressure to activate the object-in-trunk sensor, the hardtop will continue to move to the open position until the hardtop applies pressure against the object in the hardtop stowage area and activates the object-in-trunk sensor. The hardtop will automatically reverse direction to the halfway position. Normal operation can start once the object in the hardtop stowage area has been removed.

The potentiometer located on the hardtop main pivot then indicates the hardtop is stowed in the hardtop stowage area and the hardtop pump motor will shut off.

The tonneau continues to the closed position and is mechanically pulled to the latched position by cables attached to the tonneau lift mechanisms. The tonneau latch position switches confirm a latched position to the ECU and the tonneau pump motor is shut off. The chime sounds for one second and the chime and LEDs turn off, and the ECU will go to sleep.

CLOSING THE HARDTOP

Under normal conditions:

- The hardtop in the fully open position (in stowage area);
- Tonneau is latched;
- Vehicle in Park (A/T) or Neutral (M/T);
- Hand brake applied.

Start the engine, press hardtop control switch to the CLOSED position. Power is supplied to the tonneau latch solenoids, which pull on the tonneau latch release cables, releasing the tonneau latches. Power is supplied to the chime and LED's, and the chime will sound and the LED's will flash.

Power is then supplied to the tonneau pump motor, which starts to raise the tonneau. The tonneau potentiometer sends a signal to the ECU indicating that the tonneau is fully opened.

This signal causes power to be supplied to the hardtop pump motor, raising the hardtop out of the stowage area.

As the hardtop moves forward the hardtop potentiometer sends a signal to the ECU to indicate that the tonneau can start closing.

The hardtop continues closing until coming to a safety stop position, which allows for checking for obstructions between hardtop and header. The hardtop control switch must be pressed again to continue movement.

When the header latch striker enters the header latch, the header latch position switches sends a signal to the ECU indicating that the hardtop is in a position to be latched, then power will be provided to the header latch motor to engage the latches. The header unlatch limit switch sends a signal to the ECU and then the hardtop pump motor is turned off.

The tonneau continues to the closed position and is mechanically pulled to the latched position by cables attached to the tonneau lift mechanisms. The tonneau latch position switches confirm a latched position to the ECU and the tonneau pump motor is shut off.

Only after tonneau is closed and latched, power is provided to the quarter window motor and side door window motors. When the quarter windows have fully extended and the door windows have fully raised, the chime will sound for one second to indicate the completion of the hardtop up cycle. The chime and LEDs turn off, and the ECU will go to sleep.

INSPECTION AND VERIFICATION

1. Verify the customer's original concern by operating the system to duplicate the concern.

2. Inspect to determine if any of the following mechanical or electrical concerns apply:

MECHANICAL	ELECTRICAL
• Damaged linkage. (Linkage binding or bent). • Damaged or misaligned latches. • Damaged or misaligned strikers. • Damaged or misaligned cables. • Damaged hydraulic cylinders. • Damaged hydraulic lines. • Damaged hydraulic pump/motor. • Damaged header latch limit switch pins.	• Blown fuse. • Circuitry open or shorted. • Damaged control or window switches. • Damaged motors.

3. If the inspection reveals obvious concern(s) that can be readily identified, service as required.

4. If the concern(s) remain after inspection, determine the symptom and go to the Symptom Chart.

NOTE: A PC MUST BE CONNECTED AT THIS TIME TO CHECK AND RECOVER DTCs FROM THE ECU. REFER TO PC USER'S MANUAL.

SYMPTOM CHART

NO DIAGNOSTIC TROUBLE CODES PRESENT
NOTE: AFTER DETERMINING THE PINPOINT TEST, REFER TO TROUBLESHOOTING HINTS FOLLOWING SYMPTOM CHART.

CONDITION	POSSIBLE CAUSE	ACTION
• Chime does not operate with hardtop or hard tonneau open.	• Circuitry open/shorted. • Damaged chime module. • Damaged ECU.	• Go to Pinpoint Test A.
• Chime stays on continuously with hardtop and hard tonneau closed/no DTCs present.	• Circuitry shorted. • Damaged chime module. • Damaged ECU.	• Go to Pinpoint Test B.
• Driver window inoperative with driver window switch.	• Circuitry open/shorted. • Damaged window motor. • Damaged window switches. • Damaged ECU.	• Go to Pinpoint Test C.
• Driver window inoperative with hardtop operation.	• Circuitry open/shorted. • Damaged window motor. • Damaged window relays. • Damaged ECU.	• Go to Pinpoint Test DTC 52.
• Hard tonneau hydraulic system inoperative. (Possible DTC 54)	• Low fluid level. • Excessive air in system. • Internal or external leaks. • Damaged pump/motor. • Damaged hydraulic cylinders. • Damaged bypass valve. • Valve in bypass. • Damaged manifold.	• Go to Pinpoint Test D.
• Hard tonneau inoperative with control switch.	• Circuitry open/shorted. • Damaged control switch. • Damaged ECU.	• Go to Pinpoint Test E.
• Hard tonneau will not unlatch with control switch.	• Circuitry open/shorted. • Damaged hard tonneau latch solenoids. • Damaged ECU.	• Go to Pinpoint Test F.
• Hardtop Hydraulic system inoperative. (Possible DTC 55)	• Low fluid level. • Excessive air in system. • Internal or External leaks. • Damaged pump/motor. • Damaged hydraulic cylinders. • Damaged bypass valve. • Valve in bypass. • Damaged manifold.	• Go to Pinpoint Test G.
• Hardtop inoperative with control switch.	• Circuitry open/shorted. • Damaged control switch. • Damaged ECU.	• Go to Pinpoint Test H.
• Hardtop operates when automatic transmission is out of park position.	• Circuitry shorted. • Damaged ECU.	• Go to Pinpoint Test J.
• Hardtop operates when vehicle is moving. Note: Two different conditions must exist for this to occur. Proceed as indicated.	• Circuitry open/shorted. • Damaged ECU.	• Go to Pinpoint Test J for automatic transaxle and Pinpoint Test L for manual transaxle, then proceed to Pinpoint Test K.
• Hardtop operates without parking brake applied, (manual transmission).	• Circuitry shorted. • Damaged ECU.	• Go to Pinpoint Test L.

SYMPTOM CHART

NO DIAGNOSTIC TROUBLE CODES PRESENT (CONTINUED)
NOTE: AFTER DETERMINING THE PINPOINT TEST, REFER TO TROUBLESHOOTING HINTS FOLLOWING SYMPTOM CHART.

CONDITION	POSSIBLE CAUSE	ACTION
• LEDs inoperative or on all the time.	• Circuitry open/shorted. • Damaged control switch. • Damaged ECU.	• Go to Pinpoint Test M.
• Passenger window inoperative with hardtop.	• Circuitry open/shorted. • Damaged passenger window motor. • Damaged ECU.	• Go to Pinpoint Test DTC 53.
• Passenger window inoperative with window switch.	• Circuitry open/shorted. • Damaged switch. • Damaged passenger window motor. • Damaged ECU.	• Go to Pinpoint Test N.
• Passenger window will not work from drivers window switch.	• Circuitry open/shorted. • Damaged switches.	• Refer to Vol. 1 and 2 of Service Manual for window service.
• PC will not communicate with ECU.	• Circuitry open/shorted. • Damaged PC. • Damaged converter. • Damaged cables. • Damaged ECU.	• Go to Pinpoint Test P.
• Retractable quarter window (one side) inoperative.	• Damaged cable. • Damaged guide.	• Inspect and service mechanical problems.

SYMPTOM CHART

DIAGNOSTIC TROUBLE CODES

NOTE: AFTER DETERMINING THE DTC REFER TO TROUBLESHOOTING HINTS FOLLOWING SYMPTOM CHART. FOR DTC DESCRIPTION REFER TO PAGES 42-47 AND 42-48

CONDITION	POSSIBLE CAUSE	ACTION
• DTC 00	• No fault.	• Check for possible mechanical or hydraulic concerns. • Go to Symptom Chart-No Diagnostic Trouble Codes present.
• DTC 01	• Reserved	• Reserved.
• DTC 02	• Damaged ECU. • Circuitry open/shorted. • Damaged limit switch.	• Go to Pinpoint Test DTC 02-06.
• DTC 03	• Damaged ECU. • Circuitry open/shorted. • Damaged limit switch.	• Go to Pinpoint Test DTC 02-06.
• DTC 04	• Damaged ECU. • Circuitry open/shorted. • Damaged limit switch.	• Go to Pinpoint Test DTC 02-06.
• DTC 05	• Damaged ECU. • Circuitry open/shorted. • Damaged limit switch.	• Go to Pinpoint Test DTC 02-06.
• DTC 06	• Damaged ECU. • Circuitry open/shorted. • Damaged limit switch.	• Go to Pinpoint Test DTC 02-06.
• DTC 07	• Blown fuse. • Circuitry open/shorted. • Damaged ECU.	• Go to Pinpoint Test DTC 07.
• DTC 08	• Damaged battery. • Charging system malfunction. • Damaged ECU.	• Go to Pinpoint Test DTC 08.
• DTC 09	• Damaged hardtop potentiometer. • Circuitry open/shorted. • Damaged ECU.	• Go to Pinpoint Test DTC 09-11.
• DTC 10	• Damaged hardtop potentiometer. • Circuitry open/shorted. • Damaged ECU.	• Go to Pinpoint Test DTC 09-11.
• DTC 11	• Damaged hardtop potentiometer. • Circuitry open/shorted. • Damaged ECU.	• Go to Pinpoint Test DTC 09-11.
• DTC 12	• Damaged hard tonneau potentiometer. • Circuitry open/shorted. • Damaged ECU.	• Go to Pinpoint Test DTC 12-14.
• DTC 13	• Damaged hard tonneau potentiometer. • Circuitry open/shorted. • Damaged ECU.	• Go to Pinpoint Test DTC 12-14.

SYMPTOM CHART

DIAGNOSTIC TROUBLE CODES

NOTE: AFTER DETERMINING THE DTC REFER TO TROUBLESHOOTING HINTS FOLLOWING SYMPTOM CHART. FOR DTC DESCRIPTION REFER TO PAGES 42-47 AND 42-48

CONDITION	POSSIBLE CAUSE	ACTION
• DTC 14	• Damaged hard tonneau potentiometer. • Circuitry open/shorted. • Damaged ECU.	• Go to Pinpoint Test DTC 12-14.
• DTC 15	• Damaged hardtop and/or hard tonneau potentiometer.	• Go to Pinpoint Test DTC 15.
• DTC 16	• Circuitry open/shorted. • Damaged ECU.	• Go to Pinpoint Test DTC 16.
• DTC 17	• Damaged hardtop and/or hard tonneau potentiometer. • Circuitry open/shorted. • Damaged ECU.	• Go to Pinpoint Test DTC 17.
• DTC 18	• Damaged header latch limit switch. • Circuitry open/shorted. • Damaged header latch motor. • Damaged ECU. • Damaged and/or binding linkage.	• Go to Pinpoint Test DTC 18.
• DTC 19	• Damaged header latch limit switch. • Circuitry open/shorted. • Damaged ECU.	• Go to Pinpoint Test DTC 19.
• DTC 20	• Damaged header latch limit switch. • Circuitry open/shorted. • Damaged ECU.	• Go to Pinpoint Test DTC 20.
• DTC 21	• Damaged header latch limit switch. • Circuitry open/shorted. • Damaged ECU.	• Go to Pinpoint Test DTC 21.
• DTC 22	• Damaged header unlatch limit switch. • Circuitry open/shorted. • Damaged header latch motor. • Damaged ECU. • Damaged and/or binding linkage.	• Go to Pinpoint Test DTC 22.
• DTC 23	• Damaged header unlatch limit switch. • Circuitry open/shorted. • Damaged ECU.	• Go to Pinpoint Test DTC 23.
• DTC 24	• Damaged header unlatch limit switch. • Circuitry open/shorted. • Damaged ECU.	• Go to Pinpoint Test DTC 24.
• DTC 25	• Damaged header unlatch limit switch. • Circuitry open/shorted. • Damaged ECU.	• Go to Pinpoint Test DTC 25.

SYMPTOM CHART

DIAGNOSTIC TROUBLE CODES (CONTINUED)

NOTE: AFTER DETERMINING THE DTC REFER TO TROUBLESHOOTING HINTS FOLLOWING SYMPTOM CHART. FOR DTC DESCRIPTION REFER TO PAGES 42-47 AND 42-48

CONDITION	POSSIBLE CAUSE	ACTION
• DTC 26	• Damaged LH retractable quarter window extend limit switch. • Circuitry open/shorted. • Damaged retractable quarter window motor. • Damaged ECU. • Damaged and/or binding linkage.	• Go to Pinpoint Test DTC 26.
• DTC 27	• Damaged LH retractable quarter window extend limit switch. • Circuitry open/shorted. • Damaged ECU.	• Go to Pinpoint Test DTC 27.
• DTC 28	• Damaged LH retractable quarter window extend limit switch. • Circuitry open/shorted. • Damaged ECU.	• Go to Pinpoint Test DTC 28.
• DTC 29	• Damaged LH retractable quarter window extend limit switch. • Circuitry open/shorted. • Damaged ECU.	• Go to Pinpoint Test DTC 29.
• DTC 30	• Damaged RH retractable quarter window retract limit switch. • Circuitry open/shorted. • Damaged retractable quarter window motor. • Damaged ECU. • Damaged and/or binding linkage.	• Go to Pinpoint Test DTC 30.
• DTC 31	• Damaged RH retractable quarter window retract limit switch. • Circuitry open/shorted. • Damaged ECU.	• Go to Pinpoint Test DTC 31.
• DTC 32	• Damaged RH retractable quarter window retract limit switch. • Circuitry open/shorted. • Damaged ECU.	• Go to Pinpoint Test DTC 32.
• DTC 33	• Damaged RH retractable quarter window retract limit switch. • Circuitry open/shorted. • Damaged ECU.	• Go to Pinpoint Test DTC 33.
• DTC 34	• Damaged LH header position limit switch. • Circuitry open/shorted. • Damaged header latch motor. • Damaged ECU.	• Go to Pinpoint Test DTC 34.
• DTC 35	• Damaged LH header position limit switch. • Circuitry open/shorted. • Damaged ECU.	• Go to Pinpoint Test DTC 35.
• DTC 36	• Damaged LH header position limit switch. • Circuitry open/shorted. • Damaged ECU.	• Go to Pinpoint Test DTC 36.

SYMPTOM CHART

DIAGNOSTIC TROUBLE CODES (CONTINUED)

NOTE: AFTER DETERMINING THE DTC REFER TO TROUBLESHOOTING HINTS FOLLOWING SYMPTOM CHART. FOR DTC DESCRIPTION REFER TO PAGES 42-47 AND 42-48

CONDITION	POSSIBLE CAUSE	ACTION
• DTC 37	• Damaged LH header position limit switch. • Circuitry open/shorted. • Damaged ECU.	• Go to Pinpoint Test DTC 37.
• DTC 38	• Damaged RH header position limit switch. • Circuitry open/shorted. • Damaged ECU	• Go to Pinpoint Test DTC 38.
• DTC 39	• Damaged RH header position limit switch. • Circuitry open/shorted. • Damaged ECU.	• Go to Pinpoint Test DTC 39.
• DTC 40	• Damaged RH header position limit switch. • Circuitry open/shorted. • Damaged ECU.	• Go to Pinpoint Test DTC 40.
• DTC 41	• Damaged RH header position limit switch. • Circuitry open/shorted. • Damaged ECU.	• Go to Pinpoint Test DTC 41.
• DTC 42	• Damaged LH tonneau latch limit switch. • Circuitry open/shorted. • Damaged ECU.	• Go to Pinpoint Test DTC 42.
• DTC 43	• Damaged LH tonneau latch limit switch. • Circuitry open/shorted. • Damaged ECU.	• Go to Pinpoint Test DTC 43.
• DTC 44	• Damaged LH tonneau latch limit switch. • Circuitry open/shorted. • Damaged ECU.	• Go to Pinpoint Test DTC 44.
• DTC 45	• Damaged LH tonneau latch limit switch. • Circuitry open/shorted. • Damaged ECU.	• Go to Pinpoint Test DTC 45.
• DTC 46	• Damaged RH tonneau latch limit switch. • Circuitry open/shorted. • Damaged ECU.	• Go to Pinpoint Test DTC 46.
• DTC 47	• Damaged RH tonneau latch limit switch. • Circuitry open/shorted. • Damaged ECU.	• Go to Pinpoint Test DTC 47.
• DTC 48	• Damaged RH tonneau latch limit switch. • Circuitry open/shorted. • Damaged ECU.	• Go to Pinpoint Test DTC 48.

SYMPTOM CHART

DIAGNOSTIC TROUBLE CODES (CONTINUED)

NOTE: AFTER DETERMINING THE DTC REFER TO TROUBLESHOOTING HINTS FOLLOWING SYMPTOM CHART. FOR DTC DESCRIPTION REFER TO PAGES 42-47 AND 42-48

CONDITION	POSSIBLE CAUSE	ACTION
• DTC 49	• Damaged RH tonneau latch limit switch. • Circuitry open/shorted. • Damaged ECU.	• Go to Pinpoint Test DTC 49.
• DTC 50	• Circuitry shorted. • Damaged hardtop pump/motor. • Damaged ECU. • Damaged and/or binding linkage.	• Go to Pinpoint Test DTC 50.
• DTC 51	• Circuitry shorted. • Damaged hard tonneau pump/motor. • Damaged ECU. • Damaged and/or binding linkage.	• Go to Pinpoint Test DTC 51.
• DTC 52	• Circuitry open/shorted. • Damaged driver window relay assembly. • Damaged driver window motor. • Damaged ECU. • Damaged and/or binding linkage.	• Go to Pinpoint Test DTC 52.
• DTC 53	• Circuitry open/shorted. • Damaged passenger window motor. • Damaged ECU. • Damaged and/or binding linkage.	• Go to Pinpoint Test DTC 53.
• DTC 54	• Circuitry open/shorted. • Damaged hard tonneau pump/motor. • Damaged ECU. • Damaged and/or binding linkage or latches. • Operating off poor battery or poor power supply. • Obstruction of hard tonneau (other than linkage).	• Refer to Pinpoint Test for any other DTC that occurred. • Go to Pinpoint Test D, E, and F.
• DTC 55	• Circuitry open/shorted. • Damaged hardtop pump/motor. • Damaged ECU. • Damaged and/or binding linkage or latches. • Operating off poor battery or poor power supply. • Obstruction of hard tonneau (other than linkage).	• Refer to Pinpoint Test for any other DTC that occurred. • Go to Pinpoint Test G, and H.
• DTC 56	• Circuitry open/shorted. • Damaged object-in-trunk sensor. • Damaged ECU. • Object-in-trunk sensor disconnected.	• Go to Pinpoint Test DTC 56.
• DTC 57	• Damaged and/or binding LH tonneau latches or cables. • Damaged LH tonneau latch release motor. • Circuitry open.	• Check and service mechanical concerns. • Go to Pinpoint Test F.
• DTC 58	• Damaged and/or binding RH tonneau latches or cables. • Damaged RH tonneau latch release motor. • Circuitry open.	• Check and service mechanical concerns. • Go to Pinpoint Test F.

SYMPTOM CHART

DIAGNOSTIC TROUBLE CODES (CONTINUED)

NOTE: AFTER DETERMINING THE DTC REFER TO TROUBLESHOOTING HINTS FOLLOWING SYMPTOM CHART. FOR DTC DESCRIPTION REFER TO PAGES 42-47 AND 42-48

CONDITION	POSSIBLE CAUSE	ACTION
• DTC 59	• Damaged and/or binding hardtop linkage. • Damaged header latch strikers. • Damaged header latch position switches. • Circuitry open/shorted. • Damaged ECU.	• Check and service mechanical concerns. • Go to Pinpoint Test DTC 44 and DTC 48.
• DTC 60	• Damaged and/or binding hard tonneau linkage. • Damaged tonneau latch strikers. • Damaged tonneau latch position switches. • Circuitry open/shorted. • Damaged ECU.	• Check and service mechanical concerns. • Go to Pinpoint Test DTC 42 and DTC 46.
• DTC 61	• Damaged and/or binding hardtop linkage. • Obstruction in path of normal travel.	• Check and service mechanical concerns. • Remove obstruction. • Refer to other DTCs that may have occurred.
• DTC 62	• Damaged and/or binding hard tonneau linkage. • Obstruction in path of normal travel.	• Check and service mechanical concerns. • Remove obstruction. • Refer to other DTCs that may have occurred.

TROUBLESHOOTING HINTS FOR NO DTCs PRESENT

Pinpoint Test A:

Indicates that the chime module is not operating when it should. This may occur if ignition voltage is not supplied to pins 1 and 2 of the chime module, ground is not provided to pin 7 of the chime module, ground is not provided to pin 10 of the chime module through circuit AC 3, or the ECU or chime module are not responding to proper inputs.

Pinpoint Test B:

Indicates that the chime module is on at all times. This may occur if circuit AC 3 is grounded, or if the ECU or chime module is grounding this circuit.

Pinpoint Test C:

Indicates that the drivers window does not operate with the drivers window switch. This may occur if there is an open/short in circuits up to the drivers window relay assembly, or damaged drivers window relay assembly.

Driver window inoperative with hardtop operation:

Indicates that the drivers window does not operate with the hardtop operation. This may occur if circuits GW 51 or GW 52 are open/shorted, drivers window relay assembly is not functioning properly, ECU is not applying voltage and ground to circuits GW 51 and GW 52, or the drivers window motor is damaged.

Pinpoint Test D:

Indicates that the hard tonneau hydraulic system is not operating properly. This may occur with damaged pump/motor, not producing proper pressure to move hard tonneau, external leaks in cylinders and/or lines, internal leaks in cylinders or excessive air in the system.

Pinpoint Test E:

Indicates that the hard tonneau did not respond to control switch operation. This may occur if ignition voltage is not supplied to the hard tonneau control switch, damaged switch, circuits GC 5 and GC 6 open/shorted, or ECU does not respond to proper inputs.

Pinpoint Test F:

Indicates that the tonneau latches did not unlatch electrically. This may occur if circuit GC 32 or the ground wire to the tonneau latch solenoids are open/shorted, or the ECU did not send power to the solenoids.

Pinpoint Test G:

Indicates that the hardtop hydraulic system is not operating properly. This may occur with damaged pump/motor, not producing proper pressure to move hardtop, external leaks in cylinders and/or lines, internal leaks in cylinders or excessive air in the system.

Pinpoint Test H:

Indicates that the hardtop did not respond to control switch operation. This may occur if ignition voltage is not supplied to the hardtop control switch, damaged switch, circuits GC 28 and GC 4 open/shorted, or ECU does not respond to proper inputs.

TROUBLESHOOTING HINTS (CONTINUED)

Pinpoint Test J:

Indicates that the ECU is seeing voltage still supplied to circuit GC 7. This may occur with an internal ECU short to voltage, circuit GC 7 shorted to voltage, or parking switch damaged or out of adjustment.

Pinpoint Test K:

Indicates that the hardtop and/or hard tonneau may be operated while driving vehicle over 3 mph. Two conditions must be present for this to occur, circuit GC 7 must have voltage present, or circuit GC 28 must be grounded, and GC 12 (HE 3 at the ETAC) must have approximately 9 volts or greater present. These conditions may occur in the circuits, ECU, or both.

Pinpoint Test L:

Indicates that the ECU is seeing a ground supplied to circuit GC 28. This may occur with an internal ECU short to ground, circuit GC 28 shorted to ground, or the parking brake switch damaged or out of adjustment.

Pinpoint Test M:

Indicates that the LEDs either do not operate or are on all the time. If the LEDs are on all the time circuits GC 51 and/or GC 52 would be shorted to ground, depending on which LED was on. If the both LEDs do not work, this may occur if voltage is not present on circuit GC 53 from the ECU, or control switch, or ECU is damaged. If one LED does not work, this may occur if circuit GC 51 or GC 52 is open, or control switch, or ECU is damaged.

Passenger window inoperative with hardtop:

Indicates that the passengers window does not operate with the hardtop operation. This may occur if circuits GW 53 or GW 54 are open/shorted, ECU is not applying voltage and ground to circuits GW 53 and GW 54, or the passengers window motor is damaged.

Pinpoint Test N:

Indicates that the passenger window does not operate with the passenger window switch. This may occur if circuits GW 43, GW 44, are open/shorted, damaged passenger window switch, or ignition voltage not supplied to switch, or if ECU does not respond to input voltage.

Passenger window will not work from drivers window switch:

Indicates that passenger window works with hardtop and passenger window switch operation, this may occur if circuits GW 9 and/or GW 10 from drivers window switch to passenger window is open/shorted or damaged switch.

Pinpoint Test P:

Indicates that the Personal Computer (PC) and the ECU cannot communicate with each other. This may occur if ignition and ground are not supplied to the Data Link Connector (DLC), circuit GC 9 is open/shorted, PC version software does not match ECU version software, convertor and/or cables damaged, or the PC is not functioning properly.

Retractable quarter window (one side) inoperative:

If one retractable quarter window operates properly then the electrical components must be operating properly and mechanical binding or breakage is the probable cause.

TROUBLESHOOTING HINTS FOR DTCs

DTC 02-06:

Indicates an internal ECU fault. This may also occur if the ECU no longer sees its reference voltage (circuits GC 20 and GC 23), which could occur if reference voltage (circuit GC 20 or GC 23) are shorted to ground or to voltage above reference voltage. These circuits must be tested before replacing ECU.

DTC 07:

Indicates that battery voltage is missing from both circuits (GC1A AND GC 1) at the ECU. This may occur if there is an open in circuits or heavy current draw (such as a short circuit or shorted motor) causing the fuse to blow.

DTC 08:

Indicates that battery voltage is below 10 VDC or above 16 VDC. Normally caused by a damaged battery or malfunctioning charging system.

DTC 09-11:

Indicates a fault with hardtop potentiometer and/or potentiometer feed circuit GC 18, potentiometer ground circuit GC 19, or potentiometer signal return circuit GC 16.

DTC 12-14:

Indicates a fault with hard tonneau potentiometer and/or potentiometer feed circuit GC 18, potentiometer ground circuit GC 19, or potentiometer signal return circuit GC 17.

DTC 15:

Indicates an internal diode fault in either the hardtop or hard tonneau potentiometer.

DTC 16:

Indicates that the ECU is seeing higher than reference voltage on the potentiometer feed circuit. This may occur if circuit GC 18 is shorted to voltage.

DTC 17:

Indicates that the ECU is seeing the potentiometer feed circuit being grounded. This may occur if circuit GC 18 is shorted to ground.

DTC 18,22,26,30:

Indicates that the ECU did not see a change in limit switch position within the specified time (timeout). This may occur if a switch or circuits are damaged, or the motor did not move the component to move the switch.

NOTE: If the concern is with the retractable quarter window switch the magnet on the end of the cable may need to be inspected.

TROUBLESHOOTING HINTS FOR DTCs (CONTINUED)

DTC 19,23,27,31,35,39,43,47:

Indicates that the limit switch return circuit must be grounded on the ECU side and also open, this can occur in the limit switch return circuit to the ECU, through the limit switch, or in the reference circuits (GC 20 and GC 23) to the point where they would splice together to go to other limit switches. If the reference circuits (GC 20 and GC 23) are grounded beyond the splice point (grounding the circuit to more than one limit switch) the ECU will log an internal fault indicating the reference voltage is too low or missing.

DTC 20,24,28,32,36,40,44,48:

Indicates that the limit switch return circuit must be shorted to higher than reference voltage on the ECU side and also open, this can occur in the limit switch return circuit to the ECU, through the limit switch, or in the reference circuits (GC 20 and GC 23) to the point where they would splice together to go to other limit switches. If the reference circuits (GC 20 and GC 23) are shorted to voltage beyond the splice point (shorting the circuit to more than one limit switch) the ECU will log an internal fault indicating the reference voltage is to high. The short to higher voltage may occur from any circuit in or near the limit switch harness, therefore it is necessary to operate all accessories and hardtop system that may affect the harness, while locating the short.

DTC 21,25,29,33,37,41,45,49:

Indicates that the limit switch return circuit is open on the ECU side, this can occur in the limit switch return circuit to the ECU, through the limit switch, or in the reference circuits (GC 20 and GC 23) to the point where they would splice together to go to other limit switches. If the reference circuits (GC 20 and GC 23) are open beyond the splice point (opening the circuit to more than one switch) then multiple limit switch DTCs will log indicating the reference voltage is missing.

DTC 34,38:

Indicates that the ECU did not see a change in limit switch position when the hardtop is in the closed position. This may occur if the hardtop did not enter the header properly, or with damaged switches or circuitry.

DTC 42,46:

Indicates that the ECU did not see a change in limit switch position when it has seen a change in hard tonneau potentiometer position. This can occur in either the latched or unlatched position. This may indicate that the hard tonneau did not latch or unlatch properly, or damaged switch and/or circuitry.

DTC 50:

Indicates that the ECU has seen an excessive current draw from the hardtop pump and motor circuit (GC 29 and GC 30). This may occur if hardtop linkage is binding, or motor or circuitry is shorted.

DTC 51:

Indicates that the ECU has seen an excessive current draw from the hard tonneau pump and motor circuit (GC 31 and GC 32). This may occur if hard tonneau is binding, or motor or circuitry is shorted.

DTC 52: Indicates that the ECU has not seen the driver side window motor stall current before a specified time (timeout). This may occur if there is mechanical failure allowing the window motor to run without a load, or if the motor or circuitry is open. (Window may operate from drivers window switch.)

TROUBLESHOOTING HINTS FOR DTCs (CONTINUED)

DTC 53:

Indicates that the ECU has not seen the passenger window motor stall current before a specified time (timeout). This may occur if there is mechanical failure allowing the window motor to run without a load, or if the motor or circuitry is open.

DTC 54:

This DTC will normally occur with other DTC's, this indicates that the ECU has not seen movement from the hard tonneau when it should have seen movement, this DTC is recorded as the result of other concerns and not the cause. This may occur as a result of various components not allowing movement, latches not releasing, motors not operating, limit switches indicating wrong positions, etc.

DTC 55: This DTC will normally occur with other DTC's, this indicates that the ECU has not seen movement from the hardtop when it should have seen movement, this DTC is recorded as the result of other concerns and not the cause. This may occur as a result of various components not allowing movement, latches not releasing, motors not operating, limit switches indicating wrong positions, etc.

DTC 56:

Indicates that the ECU is no longer seeing a return voltage from the object-in-trunk sensor (OTS) on circuit GC 49. This may occur with damaged OTS, circuits GC 47 or GC 49 open or OTS is disconnected.

DTC 57:

Indicates that the LH tonneau latch has stayed latched for too long after the ECU has received input to release and open the tonneau. This may occur with damaged and/or binding, LH tonneau latch, release cable, and/or latch release motor, or if LH tonneau latch limit switch is sticking.

DTC 58:

Indicates that the RH tonneau latch has stayed latched for too long after the ECU has received input to release and open the tonneau. This may occur with damaged and/or binding, RH tonneau latch, release cable, and/or latch release motor, or if RH tonneau latch limit switch is sticking.

DTC 59:

Indicates that the ECU has not received input from either the RH or LH header position switch when the hardtop is in the CLOSED position. This may occur with binding, misaligned and/or damaged hardtop linkage, header latch strikers, header position switches.

DTC 60:

Indicates that the ECU has not received input from either the RH or LH tonneau position switch when the hard tonneau is in the CLOSED position. This may occur with binding, misaligned and/or damaged hard tonneau linkage, tonneau latch strikers, tonneau position switches.

TROUBLESHOOTING HINTS FOR DTCs (CONTINUED)

DTC 61:

Indicates the ECU has seen the hardtop hydraulic pump stall current (high current), when the hardtop is not either fully open (against the down stop), or fully closed (against the header). This would normally occur if there is binding hardtop linkage, or an obstruction in the normal path of travel.

DTC 62:

Indicates the ECU has seen the hard tonneau hydraulic pump stall current (high current), when the hard tonneau is not either fully open, or fully closed. This would normally occur if there is binding hard tonneau linkage, or an obstruction in the normal path of travel.

DTC* LOG IDENTIFICATION LIST

DTC*	D.R.C.** When ACTIVE	ALLOWS MOTION	DESCRIPTION
00	NO	UP/DOWN	No Fault
01	--	--	Reserved
02	NO	NO MOTION	EEPROM Failure
03	NO	NO MOTION	Abnormal Reset
04	NO	NO MOTION	A/D Failure or Quarter Window Switches shorted to bat/ign (8-16 volts dc)
05	NO	NO MOTION	ROM Checksum Failure
06	NO	NO MOTION	RAM Checksum Failure
07	NO	NO MOTION	Battery missing when ignition is on
08	NO	UP	Supply voltage out of limits (10 to 16 volts)
09	NO	UP/DOWN	Hardtop potentiometer reading beyond limit
10	NO	NO MOTION	Hardtop potentiometer short/open
11	NO	UP/DOWN	Hardtop potentiometer reading unstable
12	NO	UP/DOWN	Tonneau potentiometer reading beyond limit
13	NO	NO MOTION	Tonneau potentiometer short/open
14	NO	UP/DOWN	Tonneau potentiometer reading unstable
15	NO	NO MOTION	Potentiometer diode fault
16	NO	UP/DOWN	Potentiometer feed overload
17	NO	NO MOTION	Potentiometer feed short
18	YES	UP/DOWN	Header latch limit switch does not indicate latched before timeout
19	YES	NO MOTION	Header latch limit switch grounded
20	YES	NO MOTION	Header latch limit switch voltage too high (3 - 5 volts dc)
21	YES	NO MOTION	Header latch limit switch wiring open
22	YES	UP/DOWN	Header unlatch limit switch does not indicate unlatched before timeout
23	YES	NO MOTION	Header unlatch limit switch grounded
24	YES	NO MOTION	Header unlatch limit switch voltage too high (3 - 5 volts dc)
25	YES	NO MOTION	Header unlatch limit switch wiring open
26	YES	UP/DOWN	Retracted quarter window limit switch indicates not retracted after timeout
27	YES	UP	Retracted quarter window limit switch grounded
28	YES	UP	Retracted quarter window limit switch voltage too high (3 - 5 volts dc)
29	YES	UP	Retracted quarter window limit switch wiring open
30	YES	UP/DOWN	Extended quarter window limit switch indicates not retracted after timeout
31	YES	UP/DOWN	Extended quarter window limit switch grounded
32	YES	NO MOTION	Extended quarter window limit switch voltage too high (3 - 5 volts dc)
33	YES	UP	Extended quarter window limit switch wiring open
34	YES	UP/DOWN	Left header position switch indicates not in position when top is up
35	YES	NO MOTION	Left header position switch grounded
36	YES	NO MOTION	Left header position switch voltage too high (3 - 5 volts dc)
37	YES	NO MOTION	Left header position switch wiring open
38	YES	UP/DOWN	Right header position switch indicates not in position when top is up
39	YES	NO MOTION	Right header position switch grounded
40	YES	NO MOTION	Right header position switch voltage too high (3 - 5 volts dc)
41	YES	NO MOTION	Right header position switch wiring open
42	YES	UP/DOWN	Left tonneau latch limit switch indicates unlatched while in latched position or Left tonneau latch limit switch indicates latched while in unlatched position
43	YES	UP/DOWN	Left tonneau latch limit switch grounded
44	YES	NO MOTION	Left tonneau latch limit switch voltage too high (3 - 5 volts dc)

DTC* LOG IDENTIFICATION LIST

DTC*	D.R.C.** When ACTIVE	ALLOW	DESCRIPTION
45	YES	UP	Left tonneau latch limit switch wiring open
46	YES	UP/DOWN	Right tonneau latch limit switch indicates unlatched while in latched position or Right tonneau latch limit switch indicates latched while in unlatched position
47	YES	UP/DOWN	Right tonneau latch limit switch grounded
48	YES	NO MOTION	Right tonneau latch limit switch voltage too high (3 - 5 volts dc)
49	YES	UP	Right tonneau latch limit switch wiring open
50	NO	UP/DOWN	Hardtop motor short circuit/grounded
51	NO	UP/DOWN	Tonneau motor short circuit/grounded
52	NO	UP/DOWN	Driver window timeout without stall
53	NO	UP/DOWN	Passenger window timeout without stall
54	NO	UP/DOWN	Hardtop motion fault (dV/dt)
55	NO	UP/DOWN	Tonneau motion fault (dV/dt)
56	YES	UP	Object in trunk sensor not connected
57	YES	UP/DOWN	Left tonneau latch limit switch latched too long on tonneau up motion
58	YES	UP/DOWN	Right tonneau latch limit switch latched too long on tonneau up motion
59	YES	UP/DOWN	No header position switches when hardtop is full up
60	YES	UP/DOWN	No tonneau limit switches when tonneau is full down
61	NO	UP/DOWN	Hardtop motor detected stall while not in end position
62	NO	UP/DOWN	Tonneau motor detected stall while not in end position

* DTC - Diagnostic Trouble Code.
** Double Rate Chime.

PINPOINT TESTS

REFER TO: PAGES 42-15 THROUGH 42-17 FOR PRECAUTIONS BEFORE SERVICE, NOTES AND DEFINITIONS OF TERMS.
PAGES 42-33 THROUGH 42-40 FOR SYMPTOM CHARTS.
PAGES 42-41 THROUGH 42-46 FOR TROUBLESHOOTING HINTS.

TEST A
CHIME DOES NOT OPERATE WITH HARDTOP OR HARD TONNEAU OPEN

TEST STEP	RESULT ▶	ACTION TO TAKE
A-1 CHECK IGNITION TO PIN 2 AT CHIME MODULE		
• Access and disconnect connector E-47 at chime module. • Using a Digital Volt/Ohm Meter (DVOM) set to DC volt, connect negative lead to known good ground. • Connect positive lead to pin 2 at chime module connector E-47. • Turn ignition to ON position. • Read voltmeter. • **Is system voltage present?**	Yes ▶ No ▶	Go to **A-2.** Repair circuit AC 2. Restore vehicle. Retest system.
A-2 CHECK IGNITION TO PIN 1 AT CHIME MODULE		
• Connector E-47 at chime module disconnected. • Using a DVOM set to DC volt, connect negative lead to known good ground. • Connect positive lead to pin 1 at chime module connector E-47. • Turn ignition to ON position. • Read voltmeter. • **Is system voltage present?**	Yes ▶ No ▶	Go to **A-3.** Repair ignition circuit between pin 2 and pin 1. Restore vehicle. Retest system.
A-3 CHECK GROUND CIRCUIT TO CHIME MODULE		
• Connector E-47 at chime module disconnected. • Using a DVOM set to ohm scale, connect negative lead to known good ground. • Connect positive lead to pin 7 at chime module connector E-47. • Read ohmmeter. • **Is there 3 ohms or less?**	Yes ▶ No ▶	Go to **A-4.** Repair circuit AC 4. Restore vehicle. Retest system.
A-4 CHECK CHIME MODULE OPERATION		
• Connect connector E-47 at chime module. • Access connector F-124 at ECU. • Using a jumper wire, connect one end to a known good ground. • Back probe and connect the second end to pin 9 at ECU connector F-124. • Turn ignition to ON position. • **Does chime sound?**	Yes ▶ No ▶	Replace ECU. Restore vehicle. Retest system. Go to **A-5.**
A-5 CHECK CIRCUIT GC 39 FOR OPEN		
• Disconnect connector F-124 at ECU. • Disconnect connector E-47 at chime module. • Using a DVOM set to ohm scale connect positive lead to pin 9 at ECU connector F-124. • Connect the negative lead to pin 10 at chime module connector E-47. • Read ohmmeter. • **Is there 3 ohms or less?**	Yes ▶ No ▶	Replace chime module. Restore vehicle. Retest system. Repair circuit AC 3. Restore vehicle. Retest system.

PINPOINT TESTS

REFER TO: PAGES 42-15 THROUGH 42-17 FOR PRECAUTIONS BEFORE SERVICE, NOTES AND DEFINITIONS OF TERMS.
PAGES 42-33 THROUGH 42-40 FOR SYMPTOM CHARTS.
PAGES 42-41 THROUGH 42-46 FOR TROUBLESHOOTING HINTS.

TEST B
CHIME STAYS ON CONTINUOUSLY WITH NO DTCs PRESENT

TEST STEP		RESULT ▶	ACTION TO TAKE
B-1	CHECK ECU GROUND CIRCUIT		
• Access and disconnect connector F-124 at ECU. • Turn ignition to ON position. • **Does chime still sound?**		Yes ▶ No ▶	Go to **B-2**. Replace ECU. Restore vehicle. Retest system.
B-2	CHECK CIRCUIT GC 39 FOR SHORT TO GROUND		
• Connector F-124 at ECU disconnected. • Access and disconnect connector E-47 at chime module. • Using a Digital Volt/Ohm Meter (DVOM) set to ohm scale, connect negative lead to known good ground. • Connect positive lead to pin 9 at ECU connector F-124. • Read ohmmeter. • **Is there continuity?**		Yes ▶ No ▶	Repair circuit AC 3. Restore vehicle. Retest system. Replace chime module. Restore vehicle. Retest system.

PINPOINT TESTS

REFER TO: PAGES 42-15 THROUGH 42-17 FOR PRECAUTIONS BEFORE SERVICE, NOTES AND DEFINITIONS OF TERMS.
PAGES 42-33 THROUGH 42-40 FOR SYMPTOM CHARTS.
PAGES 42-41 THROUGH 42-46 FOR TROUBLESHOOTING HINTS.

TEST C
DRIVER WINDOW INOPERATIVE WITH DRIVER WINDOW SWITCH

TEST STEP		RESULT ▶	ACTION TO TAKE
C-1	CHECK DRIVER WINDOW OPERATION		
• Access and disconnect driver window relay assembly. • Connect driver window switch connector E-126 to driver window motor connector E-35. • Turn ignition to ON position. • Operate driver window. • Observe driver window operation. • **Does driver window operate properly?**		Yes ▶ No ▶	Refer to PINPOINT TEST DTC 52. Refer to Vol. 2 of Service Manual, for window repair.

PINPOINT TESTS

REFER TO: PAGES 42-15 THROUGH 42-17 FOR PRECAUTIONS BEFORE SERVICE, NOTES AND DEFINITIONS OF TERMS.
PAGES 42-33 THROUGH 42-40 FOR SYMPTOM CHARTS.
PAGES 42-41 THROUGH 42-46 FOR TROUBLESHOOTING HINTS.

TEST D
HARD TONNEAU HYDRAULIC SYSTEM

TEST STEP		RESULT ▶	ACTION TO TAKE
D-1	CHECK HARD TONNEAU HYDRAULIC PUMP MOTOR OPERATION		
• Place automatic transaxle in Park (P) manual transaxle in neutral. • Apply parking brake. • Turn ignition switch to ON position. • Operate hard tonneau control switch to OPEN position. • **Does hard tonneau pump motor run?**		Yes ▶ No ▶	Go to **D-2.** Go to Pinpoint Test E.
D-2	CHECK HARD TONNEAU BYPASS VALVE POSITION		
• Access and check hard tonneau bypass valve position. • **Is hard tonneau bypass valve in POWER position?**		Yes ▶ No ▶	Go to **D-3.** Rotate hard tonneau bypass valve to the POWER position. Restore vehicle. Retest system.
D-3	CHECK HARD TONNEAU HYDRAULIC FLUID LEVEL		
• Access hard tonneau hydraulic fluid reservoir. • **Is hard tonneau hydraulic fluid at proper level?**		Yes ▶ No ▶	Go to **D-4.** Add fluid, bleed system if necessary. Restore vehicle. Retest system.
D-4	CHECK HARD TONNEAU HYDRAULIC LINES		
• Access lines from hard tonneau pump to hydraulic cylinders. • **Are lines bent or kinked?**		Yes ▶ No ▶	Service as required. Restore vehicle. Retest system. Go to **D-5.**
D-5	CHECK HARD TONNEAU MANUAL OPERATION		
• Turn hard tonneau bypass valve to MANUAL position. • Operate hard tonneau manually. • **Does hard tonneau operate manually?**		Yes ▶ No ▶	Go to **D-6.** Check for binding linkage or hinges. Service as required. Restore vehicle. Retest system.

PINPOINT TESTS

REFER TO: PAGES 42-15 THROUGH 42-17 FOR PRECAUTIONS BEFORE SERVICE, NOTES AND DEFINITIONS OF TERMS.
PAGES 42-33 THROUGH 42-40 FOR SYMPTOM CHARTS.
PAGES 42-41 THROUGH 42-46 FOR TROUBLESHOOTING HINTS.

TEST D (CONTINUED)
HARD TONNEAU HYDRAULIC SYSTEM

TEST STEP		RESULT ▶	ACTION TO TAKE
D-6	CHECK HARD TONNEAU HYDRAULIC PUMP OPEN (EXTEND) PRESSURE		
NOTE: BE CAREFUL CONNECTING PRESSURE GAUGE IF HARD TONNEAU IS OPEN. MOVEMENT OF THE HARD TONNEAU MAY OCCUR. • Route pressure gauge and hose through rear seat, in order to stay clear of moving components. • Place transaxle in park (P) automatic, neutral for manual. • Parking brake applied. • Open and manually move and support hard tonneau to half open position. • Turn hard tonneau bypass valve to MANUAL position. • Connect pressure gauge to hard tonneau hydraulic pump open (extend) side. • Cap open fitting on manifold. 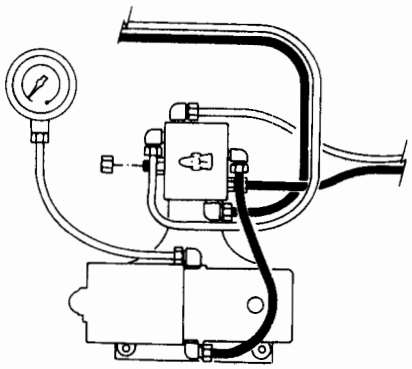 • Turn ignition to ON position. • Operate hard tonneau control switch to OPEN position. • Read pressure gauge. • **Is pressure 250 psi ± 20 psi?**		Yes ▶ No ▶	Go to **D-7**. Replace hard tonneau hydraulic pump. Restore vehicle. Retest system.

PINPOINT TESTS

REFER TO: PAGES 42-15 THROUGH 42-17 FOR PRECAUTIONS BEFORE SERVICE, NOTES AND DEFINITIONS OF TERMS.
PAGES 42-33 THROUGH 42-40 FOR SYMPTOM CHARTS.
PAGES 42-41 THROUGH 42-46 FOR TROUBLESHOOTING HINTS.

TEST D (CONTINUED)
HARD TONNEAU HYDRAULIC SYSTEM

TEST STEP		RESULT ▶	ACTION TO TAKE
D-7	CHECK HARD TONNEAU HYDRAULIC PUMP CLOSE (RETRACT) PRESSURE		
NOTE: BE CAREFUL CONNECTING PRESSURE GAUGE IF HARD TONNEAU IS OPEN. MOVEMENT OF THE HARD TONNEAU MAY OCCUR. • Place transaxle in park (P) automatic, neutral for manual. • Parking brake applied. • Open and manually move and support hard tonneau to half open position. • Connect pressure gauge to hard tonneau hydraulic pump close (retract) side. • Cap open fitting on manifold. 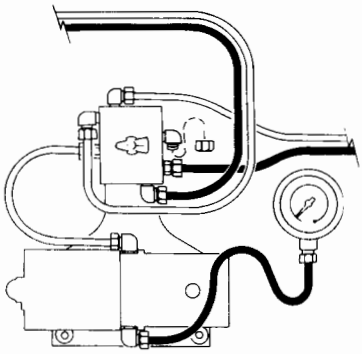 • Turn ignition to ON position. • Operate hard tonneau control switch to CLOSE position. • Read pressure gauge. • **Is pressure 350 psi or greater?**		Yes ▶ No ▶	Go to **D-8**. Replace hard tonneau hydraulic pump. Restore vehicle. Retest system.

PINPOINT TESTS

REFER TO: PAGES 42-15 THROUGH 42-17 FOR PRECAUTIONS BEFORE SERVICE, NOTES AND DEFINITIONS OF TERMS.
PAGES 42-33 THROUGH 42-40 FOR SYMPTOM CHARTS.
PAGES 42-41 THROUGH 42-46 FOR TROUBLESHOOTING HINTS.

TEST D (CONTINUED)
HARD TONNEAU HYDRAULIC SYSTEM

TEST STEP		RESULT ▶	ACTION TO TAKE
D-8	CHECK HARD TONNEAU HYDRAULIC SYSTEM FLOW PRESSURE		
• Operate hard tonneau and support in OPEN position. • Turn hard tonneau bypass valve to MANUAL position. • Connect pressure gauge to LH cylinder retract side. 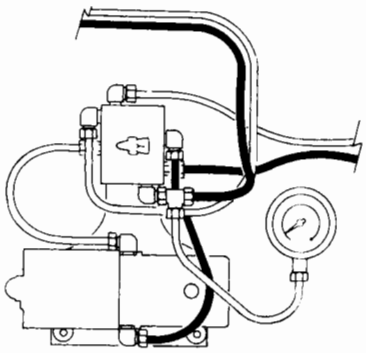 • Turn hard tonneau bypass valve to POWER position, remove support. • Turn ignition to ON position. • Press hard tonneau control switch and operate hard tonneau to CLOSE position. • Press hard tonneau control switch and operate hard tonneau to OPEN position. • Read and record highest pressure indicated. • Restore LH cylinder retract side. • Support hard tonneau in open position. • Turn hard tonneau bypass valve to MANUAL position. • Connect pressure gauge to RH cylinder retract side. 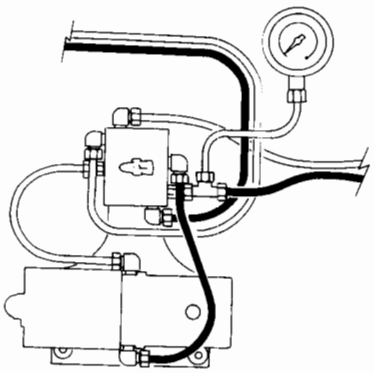 • Turn hard tonneau bypass valve to POWER position, remove support. • Turn ignition to ON position. • Press hard tonneau control switch and operate hard tonneau to CLOSE position. • Press hard tonneau control switch and operate hard tonneau to OPEN position. • Read and record highest pressure indicated. • **Are pressures less than 250 psi ± 20 psi and within 100 psi of each other?**	Yes ▶ No ▶	Hydraulic system Okay. Restore vehicle. Retest system. Pressure over 250 psi ± 20 psi check for hard tonneau binding. Under 250 psi ± 20 psi replace hydraulic cylinder on side with the lowest pressure. Restore vehicle. Retest system.	

PINPOINT TESTS

REFER TO: PAGES 42-15 THROUGH 42-17 FOR PRECAUTIONS BEFORE SERVICE, NOTES AND DEFINITIONS OF TERMS.
PAGES 42-33 THROUGH 42-40 FOR SYMPTOM CHARTS.
PAGES 42-41 THROUGH 42-46 FOR TROUBLESHOOTING HINTS.

TEST E
HARD TONNEAU INOPERATIVE WITH CONTROL SWITCH

TEST STEP		RESULT ▶	ACTION TO TAKE
E-1	CHECK CIRCUIT GC 2 FOR VOLTAGE AT HARD TONNEAU CONTROL SWITCH		
• Access connector D48 at hardtop and hard tonneau control switch. • Using a Digital Volt/Ohm Meter (DVOM) set to DC volt, connect negative lead to a known good ground. • Back probe and connect the positive lead to pin 8 at hardtop and hard tonneau control switch connector D48. • Turn ignition to ON position. • Read voltmeter. • **Is system voltage present?**		Yes ▶ No ▶	Go to **E-2.** Repair circuit GC 2. Restore vehicle. Retest system.
E-2	CHECK CIRCUIT GC 5 AT HARDTOP AND HARD TONNEAU CONTROL SWITCH		
• Access connector D48 at hardtop and hard tonneau control switch. • Using a DVOM set to DC volt, connect negative lead to a known good ground. • Back probe and connect the positive lead to pin 10 at hardtop and hard tonneau control switch connector D48. • Turn ignition to ON position. • Press hard tonneau control switch to OPEN position. • Read voltmeter. • **Is system voltage present?**		Yes ▶ No ▶	Go to **E-3.** Replace hardtop and hard tonneau control switch. Restore vehicle. Retest system.
E-3	CHECK CIRCUIT GC 5 FOR VOLTAGE AT ECU		
• Access connector F-123 at ECU. • Using a DVOM set to DC volt, connect negative lead to a known good ground. • Back probe and connect the positive lead to pin 3 at ECU connector F-123. • Turn ignition to ON position. • Press hard tonneau control switch to the OPEN position. • Read voltmeter. • **Is system voltage present?**		Yes ▶ No ▶	Go to **E-4.** Repair circuit GC 5. Restore vehicle. Retest system.
E-4	CHECK CIRCUIT GC 6 AT HARDTOP AND HARD TONNEAU CONTROL SWITCH		
• Access connector D48 at hardtop and hard tonneau control switch. • Using a DVOM set to DC volt, connect negative lead to a known good ground. • Back probe and connect the positive lead to pin 9 at hardtop and hard tonneau control switch connector D48. • Turn ignition to ON position. • Press hard tonneau control switch to CLOSE position. • Read voltmeter. • **Is system voltage present?**		Yes ▶ No ▶	Go to **E-5.** Replace hardtop and hard tonneau control switch. Restore vehicle. Retest system.

PINPOINT TESTS

REFER TO: PAGES 42-15 THROUGH 42-17 FOR PRECAUTIONS BEFORE SERVICE, NOTES AND DEFINITIONS OF TERMS.
PAGES 42-33 THROUGH 42-40 FOR SYMPTOM CHARTS.
PAGES 42-41 THROUGH 42-46 FOR TROUBLESHOOTING HINTS.

TEST E (CONTINUED)
HARD TONNEAU INOPERATIVE WITH CONTROL SWITCH

TEST STEP		RESULT ▶	ACTION TO TAKE
E-5	CHECK CIRCUIT GC 6 FOR VOLTAGE AT ECU		
• Access connector F-123 at ECU. • Using a Digital Volt/Ohm Meter (DVOM) set to DC volt, connect negative lead to a known good ground. • Back probe and connect the positive lead to pin 4 at ECU connector F-123. • Turn ignition to ON position • Press hard tonneau control switch to the CLOSE position. • Read voltmeter • **Is system voltage present?**		Yes ▶ No ▶	Replace ECU. Restore vehicle. Retest system. Repair circuit GC 6. Restore vehicle. Retest system.

PINPOINT TESTS

REFER TO: PAGES 42-15 THROUGH 42-17 FOR PRECAUTIONS BEFORE SERVICE, NOTES AND DEFINITIONS OF TERMS.
PAGES 42-33 THROUGH 42-40 FOR SYMPTOM CHARTS.
PAGES 42-41 THROUGH 42-46 FOR TROUBLESHOOTING HINTS.

TEST F
HARD TONNEAU WILL NOT UNLATCH WITH CONTROL SWITCH

TEST STEP		RESULT ▶	ACTION TO TAKE
F-1	CHECK TONNEAU LATCH OPERATION		
• Position tonneau to latched position. • Access and turn tonneau by-pass valve to MANUAL position. • Turn ignition to ON position. • Operate tonneau to OPEN position • Observe tonneau operation. • **Did either tonneau latch release?**		Yes ▶ No ▶	Go to **F-2.** Go to **F-4.**
F-2	CHECK CIRCUIT GC 35 BETWEEN TONNEAU LATCH SOLENOIDS		
• Access and disconnect connector F-125 at ECU. • Disconnect RH and LH tonneau latch solenoid connectors F-112 and F-118. • Using a Digital Volt/Ohm Meter (DVOM) set to ohm scale, connect one lead to pin A at RH tonneau latch solenoid connector F-112. • Connect the second lead to pin A at LH tonneau latch solenoid connector F-118. • Read ohmmeter. • **Is there 3 ohms or less?**		Yes ▶ No ▶	Go to **F-3.** Repair circuit GC 35. Restore vehicle. Retest system.
F-3	CHECK CIRCUIT GC 50 AT SUSPECT TONNEAU LATCH SOLENOID		
• Connectors F-112 and F-118 at RH and LH tonneau latch solenoids disconnected. • Connector F-125 at ECU disconnected. • Using a DVOM set to ohm scale, connect negative lead to known good ground. • Connect the positive lead to pin B at suspect tonneau latch solenoid, connector (F-112 or F-118). • Read ohmmeter. • **Is there 3 ohms or less?**		Yes ▶ No ▶	Replace suspect solenoid. Restore vehicle. Retest system. Repair circuit GC 50. Restore vehicle. Retest system.
F-4	CHECK CIRCUIT GC 35 FOR OPEN		
• Access and disconnect RH and LH tonneau latch solenoids. • Access and disconnect connector F-125 at ECU. • Using a Digital Volt/Ohm Meter (DVOM) set to ohm scale, connect one lead to pin A at either solenoid connector F-112 or F-118. • Connect the second lead to pin 12 at ECU connector F-125. • Read ohmmeter. • **Is there 3 ohms or less?**		Yes ▶ No ▶	Go to **F-5.** Repair circuit GC 35. Restore vehicle. Retest system.

PINPOINT TESTS

REFER TO: PAGES 42-15 THROUGH 42-17 FOR PRECAUTIONS BEFORE SERVICE, NOTES AND DEFINITIONS OF TERMS.
PAGES 42-33 THROUGH 42-40 FOR SYMPTOM CHARTS.
PAGES 42-41 THROUGH 42-46 FOR TROUBLESHOOTING HINTS.

TEST F (CONTINUED)
HARD TONNEAU WILL NOT UNLATCH WITH CONTROL SWITCH

F-5	CHECK CIRCUIT GC 50 FOR OPEN		
• Connectors F-112 and F-118 at RH and LH tonneau latch solenoids disconnected. • Connector F-125 at ECU disconnected. • Using a DVOM set to ohm scale, connect one lead to a known good ground. • Connect the second lead to pin B at each tonneau latch solenoid connector F-112 or F-118. • Read ohmmeter. • **Is there 3 ohms or less?**		Yes ▶ No ▶	Replace ECU. Restore vehicle. Retest system. Repair circuit GC 50. Restore vehicle. Retest system.

PINPOINT TESTS

REFER TO: PAGES 42-15 THROUGH 42-17 FOR PRECAUTIONS BEFORE SERVICE, NOTES AND DEFINITIONS OF TERMS.
PAGES 42-33 THROUGH 42-40 FOR SYMPTOM CHARTS.
PAGES 42-41 THROUGH 42-46 FOR TROUBLESHOOTING HINTS.

TEST G
HARDTOP HYDRAULIC SYSTEM

TEST STEP		RESULT ▶	ACTION TO TAKE
G-1	CHECK HARDTOP HYDRAULIC PUMP MOTOR OPERATION		
• Place automatic transaxle in Park (P) manual transaxle in neutral. • Apply parking brake. • Turn ignition switch to ON position. • Operate hardtop control switch to OPEN position. • **After hard tonneau opens does hardtop pump motor run?**		Yes ▶ No ▶	Go to **G-2.** Go to Pinpoint Test H.
G-2	CHECK HARDTOP BYPASS VALVE POSITION		
• Access and check hardtop bypass valve position. • **Is hardtop bypass valve in POWER position?**		Yes ▶ No ▶	Go to **G-3.** Rotate hardtop bypass valve to the POWER position. Restore vehicle. Retest system.
G-3	CHECK HARDTOP HYDRAULIC FLUID LEVEL		
• Access hardtop hydraulic fluid reservoir. • **Is hardtop hydraulic fluid at proper level?**		Yes ▶ No ▶	Go to **G-4.** Add fluid, bleed system if necessary. Restore vehicle. Retest system.
G-4	CHECK HARDTOP HYDRAULIC LINES		
• Access lines from hardtop pump to hydraulic cylinders. • **Are lines bent or kinked?**		Yes ▶ No ▶	Serviced as required. Restore vehicle. Retest system. Go to **G-5.**
G-5	CHECK HARDTOP MANUAL OPERATION		
• Note: A second person will be needed for manual operation. • Turn hardtop bypass valve to MANUAL position. • Operate hardtop manually. • **Does hardtop operate manually?**		Yes ▶ No ▶	Go to **G-6.** Check for binding linkage or hinges. Service as required. Restore vehicle. Retest system.

PINPOINT TESTS

REFER TO: PAGES 42-15 THROUGH 42-17 FOR PRECAUTIONS BEFORE SERVICE, NOTES AND DEFINITIONS OF TERMS.
PAGES 42-33 THROUGH 42-40 FOR SYMPTOM CHARTS.
PAGES 42-41 THROUGH 42-46 FOR TROUBLESHOOTING HINTS.

TEST G (CONTINUED)
HARDTOP HYDRAULIC SYSTEM

TEST STEP		RESULT ▶	ACTION TO TAKE
G-6	CHECK HARDTOP HYDRAULIC PUMP OPEN (EXTEND) PRESSURE		
NOTE: BE CAREFUL CONNECTING PRESSURE GAUGE IF HARDTOP IS PARTIALLY OPEN. MOVEMENT OF THE HARDTOP MAY OCCUR. • Route pressure gauge and hose through rear seat, in order to stay clear of moving components. • Place transaxle in park (P) automatic, neutral for manual. • Parking brake applied. • Hard tonneau open. • Turn hardtop bypass valve to MANUAL position. • Connect pressure gauge to hardtop hydraulic pump open (extend) side. 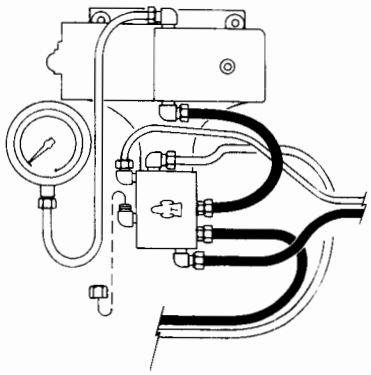 • Cap open fitting on manifold. • Manually move hardtop to half open position. • Turn ignition to ON position. • Operate hardtop control switch to OPEN position. • Read pressure gauge. • **Is pressure 400 psi or greater?**		Yes ▶ No ▶	Go to **G-7**. Replace hardtop hydraulic pump. Restore vehicle. Retest system.

PINPOINT TESTS

REFER TO: PAGES 42-15 THROUGH 42-17 FOR PRECAUTIONS BEFORE SERVICE, NOTES AND DEFINITIONS OF TERMS.
PAGES 42-33 THROUGH 42-40 FOR SYMPTOM CHARTS.
PAGES 42-41 THROUGH 42-46 FOR TROUBLESHOOTING HINTS.

TEST G (CONTINUED)
HARDTOP HYDRAULIC SYSTEM

TEST STEP		RESULT ▶	ACTION TO TAKE
G-7	CHECK HARDTOP HYDRAULIC PUMP CLOSE (RETRACT) PRESSURE		
NOTE: BE CAREFUL CONNECTING PRESSURE GAUGE IF HARDTOP IS PARTIALLY OPEN. MOVEMENT OF THE HARDTOP MAY OCCUR. • Place transaxle in park (P) automatic, neutral for manual. • Parking brake applied. • Turn hardtop bypass valve to MANUAL position. • Connect pressure gauge to hardtop hydraulic pump close (retract) side. 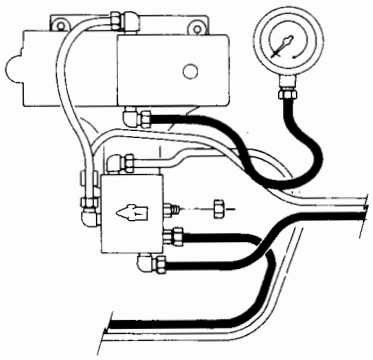 • Cap open fitting on manifold. • Manually move hardtop to half open position. • Turn ignition to ON position. • Operate hardtop control switch to CLOSE position. • Read pressure gauge. • **Is pressure 400 psi or greater?**		Yes ▶ No ▶	Go to **G-8**. Replace hardtop hydraulic pump. Restore vehicle. Retest system.

PINPOINT TESTS

REFER TO: PAGES 42-15 THROUGH 42-17 FOR PRECAUTIONS BEFORE SERVICE, NOTES AND DEFINITIONS OF TERMS.
PAGES 42-33 THROUGH 42-40 FOR SYMPTOM CHARTS.
PAGES 42-41 THROUGH 42-46 FOR TROUBLESHOOTING HINTS.

TEST G (CONTINUED)
HARDTOP HYDRAULIC SYSTEM

TEST STEP		RESULT ▶	ACTION TO TAKE
G-8	CHECK HARDTOP HYDRAULIC SYSTEM FLOW PRESSURE		
• Operate hard tonneau to OPEN position. • Operate hardtop to CLOSED position. • Turn hardtop bypass valve to MANUAL position. • Connect pressure gauge to LH cylinder retract side. 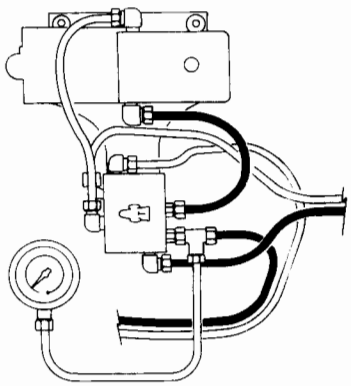 • Turn hardtop bypass valve to POWER position. • Turn ignition to ON position. • Press hardtop control switch and operate hardtop to OPEN position. • Press hardtop control switch and operate hardtop to CLOSE position. • Read and record highest pressure indicated. • Restore LH cylinder retract side. • Turn hardtop bypass valve to MANUAL position. • Connect pressure gauge to RH cylinder retract side. 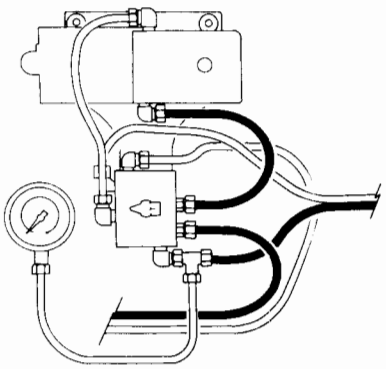 • Turn hardtop bypass valve to POWER position. • Turn ignition to ON position. • Press hardtop control switch and operate hardtop to OPEN position. • Pressure hardtop control switch and operate hardtop to CLOSE position. • Read and record highest pressure indicated. • **Are pressure less than 400 psi and within 100 psi of each other?**		Yes ▶ No ▶	Hydraulic system Okay. Restore vehicle. Retest system. Pressure over 400 psi check for hardtop binding. Under 400 psi replace hydraulic cylinder on side with the lowest pressure. Restore vehicle. Retest system.

PINPOINT TESTS

REFER TO: PAGES 42-15 THROUGH 42-17 FOR PRECAUTIONS BEFORE SERVICE, NOTES AND DEFINITIONS OF TERMS.
PAGES 42-33 THROUGH 42-40 FOR SYMPTOM CHARTS.
PAGES 42-41 THROUGH 42-46 FOR TROUBLESHOOTING HINTS.

TEST H
HARDTOP CONTROL SWITCH INOPERATIVE

TEST STEP		RESULT ▶	ACTION TO TAKE
H-1	CHECK CIRCUIT GC 2 FOR VOLTAGE AT HARDTOP CONTROL SWITCH		
• Access connector D48 at hardtop and hard tonneau control switch. • Using a Digital Volt/Ohm Meter (DVOM) set to DC volt, connect negative lead to a known good ground. • Back probe and connect the positive lead to pin 4 at hardtop and hard tonneau control switch connector D48. • Turn ignition to ON position. • Read voltmeter. • **Is system voltage present?**		Yes ▶ No ▶	Go to **H-2.** Repair circuit GC 2. Restore vehicle. Retest system.
H-2	CHECK CIRCUIT GC 4 AT HARDTOP AND HARD TONNEAU CONTROL SWITCH		
• Access connector D48 at hardtop and hard tonneau control switch. • Using a DVOM set to DC volt, connect negative lead to a known good ground. • Back probe and connect the positive lead to pin 11 at hardtop and hard tonneau control switch connector D48. • Turn ignition to ON position. • Press hardtop control switch to OPEN position. • Read voltmeter. • **Is system voltage present?**		Yes ▶ No ▶	Go to **H-3.** Replace hardtop and hard tonneau control switch. Restore vehicle. Retest system.
H-3	CHECK CIRCUIT GC 4 FOR VOLTAGE AT ECU		
• Access connector F-124 at ECU. • Using a DVOM set to DC volt, connect negative lead to a known good ground. • Back probe and connect the positive lead to pin 42 at ECU connector F-124. • Turn ignition to ON position. • Press hardtop control switch to the OPEN position. • Read voltmeter. • **Is system voltage present?**		Yes ▶ No ▶	Go to **H-4.** Repair circuit GC 4. Restore vehicle. Retest system.
H-4	CHECK CIRCUIT GC 3 AT HARDTOP AND HARD TONNEAU CONTROL SWITCH		
• Access connector D48 at hardtop and hard tonneau control switch. • Using a DVOM set to DC volt, connect negative lead to a known good ground. • Back probe and connect the positive lead to pin 3 at hardtop and hard tonneau control switch connector D48. • Turn ignition to ON position. • Press hard tonneau control switch to CLOSE position. • Read voltmeter. • **Is system voltage present?**		Yes ▶ No ▶	Go to **H-5.** Replace hardtop and hard tonneau control switch. Restore vehicle. Retest system.

PINPOINT TESTS

REFER TO: PAGES 42-15 THROUGH 42-17 FOR PRECAUTIONS BEFORE SERVICE, NOTES AND DEFINITIONS OF TERMS.
PAGES 42-33 THROUGH 42-40 FOR SYMPTOM CHARTS.
PAGES 42-41 THROUGH 42-46 FOR TROUBLESHOOTING HINTS.

TEST H (CONTINUED)
HARDTOP CONTROL SWITCH INOPERATIVE

TEST STEP		RESULT ▶	ACTION TO TAKE
H-5	CHECK CIRCUIT GC 3 FOR VOLTAGE AT ECU		
• Access connector F-124 at ECU. • Using a Digital Volt/Ohm Meter (DVOM) set to DC volt connect, negative lead to a known good ground. • Back probe and connect the positive lead to pin 28 at ECU connector F-124. • Turn ignition to ON position. • Press hard tonneau control switch to the CLOSE position. • Read voltmeter. • **Is system voltage present?**		Yes ▶ No ▶	Replace ECU. Restore vehicle. Retest system. Repair circuit GC 3. Restore vehicle. Retest system.

PINPOINT TESTS

REFER TO: **PAGES 42-15 THROUGH 42-17 FOR PRECAUTIONS BEFORE SERVICE, NOTES AND DEFINITIONS OF TERMS.**
PAGES 42-33 THROUGH 42-40 FOR SYMPTOM CHARTS.
PAGES 42-41 THROUGH 42-46 FOR TROUBLESHOOTING HINTS.

TEST J
HARDTOP OPERATES WHEN AUTOMATIC TRANSMISSION IS IN ANY GEAR

TEST STEP		RESULT ▶	ACTION TO TAKE
J-1	CHECK SYSTEM VOLTAGE AT ECU, PRNDL IN PARK POSITION		
• Access connector F-124 at ECU. • Make sure PRNDL is in PARK position. • Using a Digital Volt/Ohm Meter (DVOM) set to DC volt, connect negative lead to a known good ground. • Back probe and connect the positive lead to pin 13 at ECU connector F-124. • Turn ignition to ON position. • Read voltmeter. • **Is system voltage present?**		Yes ▶ No ▶	Go to **J-2.** Go to **J-3.**
J-2	CHECK SYSTEM VOLTAGE AT ECU, PRNDL IN DRIVE POSITION		
• Access connector F-124 at ECU. • Place PRNDL in DRIVE position. • Using a DVOM set to DC volt, connect negative lead to a known good ground. • Back probe and connect the positive lead to pin 13 at ECU connector F-124. • Turn ignition to ON position. • Read voltmeter. • **Is system voltage present?**		Yes ▶ No ▶	Go to **J-4.** Replace ECU. Restore vehicle. Retest system.
J-3	CHECK CIRCUIT GC 7 AT PARKING SWITCH		
• Access parking switch connector D-50. • Place PRNDL in PARK position. • Using a DVOM set to DC volt, connect negative lead to known good ground. • Back probe and connect positive lead to pin 2 at connector D-50. • Turn ignition to ON position. • Read voltmeter. • **Is system voltage present?**		Yes ▶ No ▶	Repair circuit GC 7. Restore vehicle. Retest system. Replace park switch or repair circuit GC 8. Restore vehicle. Retest system.
J-4	CHECK CIRCUIT GC 7 FOR SHORT TO VOLTAGE		
• Access and disconnect parking switch connector D-50. • Access and disconnect connector F-124 at ECU. • Using a DVOM set to DC volt, connect negative lead to known good ground. • Connect positive lead to pin 13 at ECU connector F-124. • Turn ignition to ON position. • Read voltmeter. • **Is system voltage present?**		Yes ▶ No ▶	Repair circuit GC 7. Restore vehicle. Retest system. Replace park switch or repair circuit GC 8. Restore vehicle. Retest system.

PINPOINT TESTS

REFER TO: PAGES 42-15 THROUGH 42-17 FOR PRECAUTIONS BEFORE SERVICE, NOTES AND DEFINITIONS OF TERMS.
PAGES 42-33 THROUGH 42-40 FOR SYMPTOM CHARTS.
PAGES 42-41 THROUGH 42-46 FOR TROUBLESHOOTING HINTS.

TEST K
HARDTOP OPERATES WHEN VEHICLE IS MOVING

TEST STEP		RESULT ▶	ACTION TO TAKE
K-1	CHECK CIRCUIT GC 12 AT ECU FOR SYSTEM VOLTAGE		
NOTE: Two different conditions must exist for this to occur. This Pinpoint Test should be performed after Pinpoint Test J (for automatic transaxle) and Pinpoint Test L (for manual transaxle) has been performed. • Raise vehicle off ground and set stands under vehicle. • Access connector F-124 at ECU. • Using a Digital Volt/Ohm Meter (DVOM) set to DC volt, connect negative lead to a known good ground. • Back probe and connect the positive lead to pin 12 at ECU connector F-124. • Turn ignition to ON position. • Read voltmeter. NOTE: If voltage is initially low, rotate LH front wheel 45 to 90 degrees and read voltmeter. • **Is voltage 9.0 vdc or more?**		Yes ▶ No ▶	Go to **K-2**. Go to **K-3**.
K-2	CHECK CIRCUIT GC 12 AT ECU WITH WHEEL TURNING		
• Vehicle raised off ground and stands under vehicle. • Access connector F-124 at ECU. • Using a DVOM set to DC volt, connect negative lead to a known good ground. • Back probe and connect the positive lead to pin 12 at ECU connector F-124. • Start engine. • Place transaxle in gear. • Carefully allow front wheels to rotate over 3 mph. • Read voltmeter. • **Is voltage between 5 and 10 vdc?**		Yes ▶ No ▶	Replace ECU. Restore vehicle. Retest system. Refer to Volume 2 of Service Manual for speed sensor input service.
K-3	CHECK CIRCUIT HE 3 AT ETAC		
• Vehicle raised off ground and stands under vehicle. • Access ETAC connector C-66. • Using a DVOM set to DC volt, connect negative lead to a known good ground. • Back probe and connect the positive lead to pin 61 at ETAC connector C-66. • Turn ignition to ON position. • Read voltmeter. NOTE: If voltage is initially low, rotate LH front wheel 45 to 90 degrees and read voltmeter. • **Is voltage 9.0 vdc or more?**		Yes ▶ No ▶	Repair circuit GC 12. Restore vehicle. Retest system. Refer to Volume 2 of Service Manual for speed sensor input service.

PINPOINT TESTS

REFER TO: PAGES 42-15 THROUGH 42-17 FOR PRECAUTIONS BEFORE SERVICE, NOTES AND DEFINITIONS OF TERMS.
PAGES 42-33 THROUGH 42-40 FOR SYMPTOM CHARTS.
PAGES 42-41 THROUGH 42-46 FOR TROUBLESHOOTING HINTS.

TEST L
HARDTOP OPERATES WITHOUT PARKING BRAKE APPLIED (MANUAL TRANSMISSION)

TEST STEP		RESULT ▶	ACTION TO TAKE
L-1	CHECK CIRCUIT GC 28 AT ECU		
• Access and disconnect connector F-124 at ECU. • Make sure parking brake is not applied. • Using a Digital Volt/Ohm Meter (DVOM) set to ohm scale, connect negative lead to a known good ground. • Connect the positive lead to pin 7 at ECU connector F-124. • Read ohmmeter. • **Is there continuity?**		Yes ▶ No ▶	Go to **L-2**. Replace ECU. Restore vehicle. Retest system.
L-2	CHECK CIRCUIT GC 28 AT PARKING BRAKE SWITCH		
• Connector F-124 at ECU disconnected • Access and disconnect parking brake switch connector D28. • Using a DVOM set to ohm scale, connect negative lead to a known good ground. • Connect the positive lead to pin 7at ECU connector F-124. • Read ohmmeter. • **Is there continuity?**		Yes ▶ No ▶	Repair circuit GC 28. Restore vehicle. Retest system. Replace parking brake switch. Restore vehicle. Retest system.

PINPOINT TESTS

REFER TO: PAGES 42-15 THROUGH 42-17 FOR PRECAUTIONS BEFORE SERVICE, NOTES AND DEFINITIONS OF TERMS.
PAGES 42-33 THROUGH 42-40 FOR SYMPTOM CHARTS.
PAGES 42-41 THROUGH 42-46 FOR TROUBLESHOOTING HINTS.

TEST M
LEDs INOPERATIVE OR ON AT ALL TIMES

TEST STEP		RESULT ▶	ACTION TO TAKE
M-1	CHECK CIRCUIT GC 53 FOR VOLTAGE AT HARDTOP AND HARD TONNEAU CONTROL SWITCH		
• Access and disconnect connector D-48 at hardtop and hard tonneau control switch. • Using a Digital Volt/Ohm Meter (DVOM) set to DC volt, connect negative lead to a known good ground. • Connect the positive lead to pin 6 at hardtop and hard tonneau control switch connector D-48. • Turn ignition to ON position. • Read voltmeter. • **Is system voltage present?**		Yes ▶ No ▶	Go to **M-2**. Go to **M-3**.
M-2	CHECK CIRCUIT GC 52 FOR SHORT TO GROUND		
• Connector D-48 at hardtop and hard tonneau control switch disconnected. • Access and disconnect connector F-124 at ECU. • Using a DVOM set to ohm scale, connect negative lead to known good ground. • Connect positive lead to pin 17 at ECU connector F-124. • Read ohmmeter. • **Is there continuity?**		Yes ▶ No ▶	Repair circuit GC 52. Restore vehicle. Retest system. Go to **M-4**.
M-3	CHECK CIRCUIT GC 53 FOR SHORT TO GROUND		
• Connector D-48 at hardtop and hard tonneau control switch disconnected. • Access and disconnect connector F-124 at ECU. • Using a DVOM set to ohm scale, connect negative lead to known good ground. • Connect positive lead to pin 20 at ECU connector F-124. • Read ohmmeter. • **Is there continuity?**		Yes ▶ No ▶	Repair circuit GC 53. Restore vehicle. Retest system. Go to **M-5**.
M-4	CHECK CIRCUIT GC 52 FOR OPEN		
• Connector D-48 at hardtop and hard tonneau control switch disconnected. • Connector F-124 at ECU disconnected. • Using a DVOM set to ohm scale, connect positive lead to pin 17 at ECU connector F-124. • Connect the negative lead to pin 3 at hardtop and hard tonneau control switch connector D-48. • Read ohmmeter. • **Is there 3 ohms or less?**		Yes ▶ No ▶	Go to **M-6**. Repair circuit GC 52. Restore vehicle. Retest system.

PINPOINT TESTS

REFER TO: PAGES 42-15 THROUGH 42-17 FOR PRECAUTIONS BEFORE SERVICE, NOTES AND DEFINITIONS OF TERMS.
PAGES 42-33 THROUGH 42-40 FOR SYMPTOM CHARTS.
PAGES 42-41 THROUGH 42-46 FOR TROUBLESHOOTING HINTS.

TEST M (CONTINUED)
LEDs INOPERATIVE OR ON AT ALL TIMES

TEST STEP	RESULT ▶	ACTION TO TAKE
M-5 CHECK CIRCUIT GC 53 FOR OPEN		
• Connector D-48 at hardtop and hard tonneau control switch disconnected. • Connector F-124 at ECU disconnected. • Using a DVOM set to ohm scale, connect positive lead to pin 20 at ECU connector F-124. • Connect the negative lead to pin 6 at hardtop and hard tonneau control switch connector D-48. • Read ohmmeter. • **Is there 3 ohms or less?**	Yes ▶ No ▶	Replace ECU. Restore vehicle. Retest system. Repair circuit GC 53. Restore vehicle. Retest system.
M-6 CHECK CIRCUIT GC 51 FOR SHORT TO GROUND		
• Connector D-48 at hardtop and hard tonneau control switch disconnected. • Connector F-124 at ECU disconnected. • Using a Digital Volt/Ohm Meter (DVOM) set to ohm scale, connect negative lead to known good ground. • Connect positive lead to pin 16 at ECU connector F-124. • Read ohmmeter. • **Is there continuity?**	Yes ▶ No ▶	Repair circuit GC 51. Restore vehicle. Retest system. Go to **M-7.**
M-7 CHECK CIRCUIT GC 51 FOR OPEN		
• Connector D-48 at hardtop and hard tonneau control switch disconnected. • Connector F-124 at ECU disconnected. • Using a DVOM set to ohm scale connect negative lead to pin 7 at hardtop and hard tonneau control switch connector. • Connect positive lead to pin 16 at ECU connector F-124. • Read ohmmeter. • **Is there 3 ohms or less?**	Yes ▶ No ▶	Go to **M-8.** Repair circuit GC 51. Restore vehicle. Retest system.
M-8 CHECK LEDs IN SWITCH		
• Connect connector F-124 at ECU. • Connect a known good hardtop and hard tonneau control switch. • Operate system. • **Do the LEDs operate properly?**	Yes ▶ No ▶	Replace hardtop and hard tonneau control switch. Restore vehicle. Retest system. Replace ECU. Restore vehicle. Retest system.

PINPOINT TESTS

REFER TO: PAGES 42-15 THROUGH 42-17 FOR PRECAUTIONS BEFORE SERVICE, NOTES AND DEFINITIONS OF TERMS.
PAGES 42-33 THROUGH 42-40 FOR SYMPTOM CHARTS.
PAGES 42-41 THROUGH 42-46 FOR TROUBLESHOOTING HINTS.

TEST N
PASSENGER WINDOW INOPERATIVE WITH PASSENGER WINDOW SWITCH

TEST STEP		RESULT ▶	ACTION TO TAKE
N-1	CHECK CIRCUIT GW 43 FOR VOLTAGE AT ECU		
• Access connector F-124 at ECU. • Using a Digital Volt/Ohm Meter (DVOM) set to DC volt, connect negative lead to known good ground. • Back probe and connect positive lead to pin 1 at ECU connector F-124. • Turn ignition to ON position. • Press passenger window switch to UP position. • Read voltmeter. • **Is system voltage present?**		Yes ▶ No ▶	Go to **N-2.** Go to **N-3.**
N-2	CHECK CIRCUIT GW 44 FOR VOLTAGE AT ECU		
• Access connector F-124 at ECU. • Using a DVOM set to DC volt, connect negative lead to known good ground. • Back probe and connect positive lead to pin 2 at ECU connector F-124. • Turn ignition to ON position. • Press passenger window switch to DOWN position. • Read voltmeter. • **Is system voltage present?**		Yes ▶ No ▶	Go to **N-5.** Go to **N-4.**
N-3	CHECK CIRCUIT GW 43 FOR VOLTAGE AT PASSENGER DOOR SWITCH		
• Access passenger window switch connector E-06. • Using a DVOM set to DC volt, connected negative lead to a known good ground. • Back probe and connect positive lead to pin 5 at passenger window switch connector E-06. • Turn ignition to ON position. • Operate the passenger window switch to UP position. • Read voltmeter. • **Is system voltage present?**		Yes ▶ No ▶	Repair circuit GW 43. Restore vehicle. Retest system. Refer to Vol. 2 of Service Manual.
N-4	CHECK CIRCUIT GW 44 FOR VOLTAGE AT PASSENGER DOOR SWITCH		
• Access passenger window switch connector E-06. • Using a DVOM set to DC volt, connected negative lead to a known good ground. • Back probe and connect positive lead to pin 3 at passenger window switch connector E-06. • Turn ignition to ON position. • Operate the passenger window switch to DOWN position. • Read voltmeter. • **Is system voltage present?**		Yes ▶ No ▶	Repair circuit GW 44. Restore vehicle. Retest system. Refer to Vol. 1 of Service Manual.

PINPOINT TESTS

REFER TO: PAGES 42-15 THROUGH 42-17 FOR PRECAUTIONS BEFORE SERVICE, NOTES AND DEFINITIONS OF TERMS.
PAGES 42-33 THROUGH 42-40 FOR SYMPTOM CHARTS.
PAGES 42-41 THROUGH 42-46 FOR TROUBLESHOOTING HINTS.

TEST N (CONTINUED)
PASSENGER WINDOW INOPERATIVE WITH PASSENGER WINDOW SWITCH

TEST STEP		RESULT ▶	ACTION TO TAKE
N-5	CHECK CIRCUIT GW 53 FOR VOLTAGE		
• Access connector F-123 at ECU. • Using a Digital Volt/Ohm Meter (DVOM) set to DC volt, connected negative lead to known good ground. • Back probe and connect positive lead to pin 13 at ECU connector F-123. • Turn ignition to ON position. • Momentarily operate passenger window switch to UP position. • Read voltmeter. • **Is system voltage present?**		Yes ▶ No ▶	Go to **N-6**. Replace ECU. Restore vehicle. Retest system.
N-6	CHECK CIRCUIT GW 54 FOR VOLTAGE		
• Access connector F-123 at ECU. • Using a DVOM set to DC volt, connected negative lead to a known good ground. • Back probe and connect positive lead to pin 14 at ECU connector F-123. • Turn ignition to ON position. • Momentarily operate passenger window switch to DOWN position. • Read voltmeter. • **Is system voltage present?**		Yes ▶ No ▶	Go to **N-7**. Replace ECU. Restore vehicle. Retest system.
N-7	CHECK PASSENGER WINDOW MOTOR CIRCUITS FOR OPEN		
• Disconnect connector F-123 at ECU. • Using a DVOM set to ohm scale connect negative lead to pin 13 at ECU connector F-123. • Connect the positive lead to pin 14 at ECU connector F-123. • Read ohmmeter. • **Is there 10 ohms or less?**		Yes ▶ No ▶	Replace passenger window motor. Restore vehicle. Retest system. Go to **N-8**.
N-8	CHECK CIRCUIT GW 53 FOR OPEN		
• Connector F-123 at ECU disconnected. • Access and disconnect passenger window motor connector E-08. • Using a DVOM set to ohm scale, connect positive lead to pin 13 at ECU connector F-123. • Connect the negative lead to pin 2 at passenger window motor harness connector E-08. • Read ohmmeter. • **Is there 3 ohms or less?**		Yes ▶ No ▶	Go to **N-9**. Repair circuit GW 53. Restore vehicle. Retest system.

PINPOINT TESTS

REFER TO: PAGES 42-15 THROUGH 42-17 FOR PRECAUTIONS BEFORE SERVICE, NOTES AND DEFINITIONS OF TERMS.
PAGES 42-33 THROUGH 42-40 FOR SYMPTOM CHARTS.
PAGES 42-41 THROUGH 42-46 FOR TROUBLESHOOTING HINTS.

TEST N (CONTINUED)
PASSENGER WINDOW INOPERATIVE WITH PASSENGER WINDOW SWITCH

TEST STEP		RESULT ▶	ACTION TO TAKE
N-9	CHECK CIRCUIT GW 54 FOR OPEN		
• Connector F-123 at ECU disconnected. • Passenger window motor disconnected connector E-08. • Using a DVOM set to ohm scale, connect positive lead to pin 14 at ECU connector F-123. • Connect the negative lead to pin 1 at passenger window motor harness connector E-08. • Read ohmmeter. • **Is there 3 ohms or less?**		Yes ▶ No ▶	Replace passenger window motor. Restore vehicle. Retest system. Repair circuit GW 54. Restore vehicle. Retest system.

PINPOINT TESTS

REFER TO: PAGES 42-15 THROUGH 42-17 FOR PRECAUTIONS BEFORE SERVICE, NOTES AND DEFINITIONS OF TERMS.
PAGES 42-33 THROUGH 42-40 FOR SYMPTOM CHARTS.
PAGES 42-41 THROUGH 42-46 FOR TROUBLESHOOTING HINTS.

TEST P
PC WILL NOT COMMUNICATE WITH ECU

TEST STEP	RESULT ▶	ACTION TO TAKE
P-1 CHECK CIRCUIT GC 70 FOR VOLTAGE AT DLC NOTE: Verify that correct Personal Computer (PC) and ECU software are installed before proceeding. • Access Data Link Connector (DLC) connector C-91. • Using a Digital Volt/Ohm Meter (DVOM) set to DC volt, connect negative lead to a known good ground. • Connect positive lead to pin 1 at DLC connector C-91. • Turn ignition to ON position. • Read voltmeter. • **Is system voltage present?**	Yes ▶ No ▶	Go to **P-2**. Repair circuit GC 70. Restore vehicle. Retest system.
P-2 CHECK CIRCUIT GC 71 FOR GROUND AT DLC • Access DLC connector C-91. • Using a DVOM set to DC volt, connect negative lead to pin 3 at DLC connector C-91. • Connect the positive lead to pin 1 at DLC connector C-91. • Turn ignition to ON position. • Read voltmeter. • **Is system voltage present?**	Yes ▶ No ▶	Go to **P-3**. Repair circuit GC 71. Restore vehicle. Retest system.
P-3 CHECK CIRCUIT GC 9 FOR OPEN • Access and disconnect connector F-124 at ECU. • Access DLC connector C-91. • Using a DVOM set to ohm scale, connect one lead to pin 2 at DLC connector C-91. • Connect the second lead to pin 10 at ECU connector F-124. • Read ohmmeter. • **Is there 3 ohms or less?**	Yes ▶ No ▶	Go to **P-4**. Repair circuit GC 9. Restore vehicle. Retest system.
P-4 VERIFY PC AND CONVERTER OPERATION • Verify PC, Converter and cable operation. • Refer to PC Users Manual. • **Is test equipment operational?**	Yes ▶ No ▶	Replace ECU. Restore vehicle. Retest system. Service as required. Retest system.

PINPOINT TESTS

REFER TO: **PAGES 42-15 THROUGH 42-17 FOR PRECAUTIONS BEFORE SERVICE, NOTES AND DEFINITIONS OF TERMS.**
PAGES 42-33 THROUGH 42-40 FOR SYMPTOM CHARTS.
PAGES 42-41 THROUGH 42-46 FOR TROUBLESHOOTING HINTS.

DTC 02-06

TEST STEP		RESULT ▶	ACTION TO TAKE
2-1	CHECK CIRCUIT GC 20 FOR SHORT TO GROUND		
• Access and disconnect connector F-124 at ECU. • Using a Digital Volt/Ohm Meter (DVOM) set to ohm scale, connect negative lead to a known good ground. • Connect the positive lead to pin 22 at ECU connector F-124. • Read ohmmeter. • **Is there continuity?**		Yes ▶ No ▶	Go to **2-4**. Go to **2-2**.
2-2	CHECK CIRCUIT GC 22 FOR SHORT TO GROUND		
• Connector F-124 at ECU disconnected. • Using a DVOM set to ohm scale, connect negative lead to known good ground. • Connect positive lead to pin 23 at ECU connector F-124. • Read ohmmeter. • **Is there continuity?**		Yes ▶ No ▶	Go to **2-4**. Go to **2-3**.
2-3	CHECK CIRCUIT GC 20 AND GC 22 FOR SHORT		
• Connector F-124 at ECU disconnected. • Using a DVOM set to ohm scale, connect one lead to pin 22 at ECU connector F-124. • Connect the second lead to pin 23 at ECU connector F-124. • Read ohmmeter. • **Is there 3 ohms or less?**		Yes ▶ No ▶	Go to **2-4**. Replace ECU. Restore vehicle. Retest system.
2-4	CHECK ROOF HARNESS FOR SHORT		
• Connector F-124 at ECU disconnected. • Using a DVOM set on ohm scale, connect as previous test. • Access and disconnect roof harness to rear harness connector E-122 (8 way) at LH rear roof area. • Read ohmmeter. • **Is short still present?**		Yes ▶ No ▶	Go to **2-5**. Repair roof harness as necessary. Restore vehicle. Retest system.
2-5	CHECK HEADER HARNESS FOR SHORT		
• Connector F-124 at ECU disconnected. • Using a DVOM set on ohm scale, connect as previous test. • Access and disconnect header harness to body harness 10 way connector E-46 at LH A-pillar area. • Read ohmmeter. • **Is short still present?**		Yes ▶ No ▶	Go to **2-6**. Repair header harness as necessary. Restore vehicle. Retest system.

PINPOINT TESTS

REFER TO: PAGES 42-15 THROUGH 42-17 FOR PRECAUTIONS BEFORE SERVICE, NOTES AND DEFINITIONS OF TERMS.
PAGES 42-33 THROUGH 42-40 FOR SYMPTOM CHARTS.
PAGES 42-41 THROUGH 42-46 FOR TROUBLESHOOTING HINTS.

DTC 02-06 (CONTINUED)

TEST STEP		RESULT ▶	ACTION TO TAKE
2-6	CHECK REAR HARNESS FOR SHORT		
• Connector F-124 at ECU disconnected. • Using a DVOM set on ohm scale, connect as previous test. • Access and disconnect rear harness to body harness connector F-48 behind LH quarter trim panel area. • Read ohmmeter. • **Is short still present?**		Yes ▶ No ▶	Repair rear harness as necessary. Restore vehicle. Retest system. Repair body harness as necessary. Restore vehicle. Retest system.

PINPOINT TESTS

REFER TO: PAGES 42-15 THROUGH 42-17 FOR PRECAUTIONS BEFORE SERVICE, NOTES AND DEFINITIONS OF TERMS.
PAGES 42-33 THROUGH 42-40 FOR SYMPTOM CHARTS.
PAGES 42-41 THROUGH 42-46 FOR TROUBLESHOOTING HINTS.

DTC 07

TEST STEP		RESULT ▶	ACTION TO TAKE
7-1	CHECK 60 AMP FUSE		
• Access and remove Number 8 60A fusible link in engine compartment fuse panel. • Using a Digital Volt/Ohm Meter (DVOM) set to ohm scale, connect one lead to each terminal of fuse. • Read ohmmeter. • **Is there continuity?**		Yes ▶ No ▶	Go to **7-2**. Go to **7-5**.
7-2	CHECK BATTERY SUPPLY TO FUSE		
• Using a DVOM set to DC volt, with fuse removed, connect negative lead to a known good ground. • Connect the positive lead to the battery terminal in fuse cavity. • Read voltmeter. • **Is system voltage present?**		Yes ▶ No ▶	Go to **7-3**. Repair circuit to fuse panel. Restore vehicle. Retest system.
7-3	CHECK CIRCUIT GW 1 FOR SYSTEM VOLTAGE AT ECU		
• Install 60 amp fuse. • Access and disconnect connector F-125 at ECU. • Using a DVOM set to DC volt, connect negative lead to a known good ground. • Connect the positive lead to pin 13 at ECU connector F-125. • Read voltmeter. • **Is system voltage present?**		Yes ▶ No ▶	Go to **7-4**. Repair circuit GW 1. Restore vehicle. Retest system.
7-4	CHECK CIRCUIT GC 1 FOR SYSTEM VOLTAGE		
• Connector F-125 at ECU disconnected. • Using a DVOM set to DC volt, connect negative lead to a known good ground. • Connect the positive lead to pin 20 at ECU connector F-125. • Read voltmeter. • **Is system voltage present?**		Yes ▶ No ▶	Replace ECU. Restore vehicle. Retest system. Repair circuit GC 1. Restore vehicle. Retest system.
7-5	CHECK CIRCUIT GC 1 FOR SHORT TO GROUND		
• Access and disconnect connector F-125 at ECU. • Fuse still removed. • Using a DVOM set to ohm scale, connect negative lead to a known good ground. • Connect positive lead to pin 20 at ECU connector F-125. • Read ohmmeter. • **Is there continuity?**		Yes ▶ No ▶	Repair circuit GC 1. Restore vehicle. Retest system. Go to **7-6**.

PINPOINT TESTS

REFER TO: PAGES 42-15 THROUGH 42-17 FOR PRECAUTIONS BEFORE SERVICE, NOTES AND DEFINITIONS OF TERMS.
PAGES 42-33 THROUGH 42-40 FOR SYMPTOM CHARTS.
PAGES 42-41 THROUGH 42-46 FOR TROUBLESHOOTING HINTS.

DTC 07 (CONTINUED)

TEST STEP		RESULT ▶	ACTION TO TAKE
7-6	CHECK CIRCUIT GW 1 FOR SHORT TO GROUND		
• Connector F-125 at ECU disconnected. • Fuse removed. • Using a DVOM set on ohm scale, connect negative lead to known good ground. • Connect the positive lead to pin 13 at ECU connector F-125. • Read ohmmeter. • **Is there continuity?**		Yes ▶ No ▶	Repair circuit GW 1. Restore vehicle. Retest system. Replace ECU. Restore vehicle. Retest system.

PINPOINT TESTS

REFER TO: PAGES 42-15 THROUGH 42-17 FOR PRECAUTIONS BEFORE SERVICE, NOTES AND DEFINITIONS OF TERMS.
PAGES 42-33 THROUGH 42-40 FOR SYMPTOM CHARTS.
PAGES 42-41 THROUGH 42-46 FOR TROUBLESHOOTING HINTS.

DTC 08

TEST STEP		RESULT ▶	ACTION TO TAKE
8-1	CHECK BATTERY VOLTAGE ENGINE OFF		
• Access battery. • Using a Digital Volt/Ohm Meter (DVOM) set to DC volt, connect positive lead to battery positive terminal. • Connect the negative lead to battery negative terminal. • Read voltmeter. • **Is battery voltage between 10 and 16 volts?**		Yes ▶ No ▶	Go to **8-2.** Refer to Vol. 2 of the Service Manual.
8-2	CHECK BATTERY VOLTAGE ENGINE RUNNING		
• Access battery. • Using a DVOM set to DC volt connect positive lead to battery positive terminal. • Connect the negative lead to battery negative terminal. • Start engine. • Read voltmeter. • **Is battery voltage between 10 and 16 volts?**		Yes ▶ No ▶	Replace ECU. Restore vehicle. Retest system. Refer to Vol. 2 of the Service Manual.

PINPOINT TESTS

REFER TO: PAGES 42-15 THROUGH 42-17 FOR PRECAUTIONS BEFORE SERVICE, NOTES AND DEFINITIONS OF TERMS.
PAGES 42-33 THROUGH 42-40 FOR SYMPTOM CHARTS.
PAGES 42-41 THROUGH 42-46 FOR TROUBLESHOOTING HINTS.

DTC 09-11

TEST STEP		RESULT ▶	ACTION TO TAKE
9-1	CHECK HARDTOP POTENTIOMETER AT ECU		
• Access and disconnect hard tonneau potentiometer connector F-114. • Access and disconnect connector F-124 at ECU. • Using a Digital Volt/Ohm Meter (DVOM) set to ohm scale, connect one lead to pin 15 at ECU connector F-124. • Connect the second lead to pin 29 at ECU connector F-124. • Read ohmmeter. • **Is there 4500 to 6200 ohms?**		Yes ▶ No ▶	Go to **9-2**. Go to **9-3**.
9-2	CHECK CIRCUIT GC 16 FROM POTENTIOMETER		
• Connector F-114 at hard tonneau potentiometer disconnected. • Connector F-124 at ECU disconnected. • Using a DVOM set to ohm scale, connect one lead to pin 15 at ECU connector F-124. • Connect the second lead to pin 30 at ECU connector F-124. • Read ohmmeter. • **Is there 1000 to 6500 ohms?**		Yes ▶ No ▶	Replace ECU. Restore vehicle. Retest system. Go to **9-6**.
9-3	CHECK HARDTOP POTENTIOMETER		
• Connector F-114 at hard tonneau potentiometer disconnected. • Connector F-124 at ECU disconnected. • Using a DVOM set to ohm scale, back probe and connect one lead to pin A at hardtop potentiometer connector F-110. • Back probe and connect the second lead to pin C at hardtop potentiometer connector F-110. • Read ohmmeter. • **Is there 4500 to 5500 ohms?**		Yes ▶ No ▶	Go to **9-4**. Replace hardtop potentiometer. Restore vehicle. Retest system.
9-4	CHECK CIRCUIT GC 18 FOR OPEN		
• Connector F-114 at hard tonneau potentiometer disconnected. • Connector F-124 at ECU disconnected. • Disconnect hardtop potentiometer connector F-110. • Using a DVOM set to ohm scale, connect one lead to pin 15 at ECU connector F-124. • Connect the second lead to pin A at hardtop potentiometer connector F-110. • Read ohmmeter. • **Is there 3 ohms or less?**		Yes ▶ No ▶	Go to **9-5**. Repair circuit GC 18. Restore vehicle. Retest system.

PINPOINT TESTS

REFER TO: PAGES 42-15 THROUGH 42-17 FOR PRECAUTIONS BEFORE SERVICE, NOTES AND DEFINITIONS OF TERMS.
PAGES 42-33 THROUGH 42-40 FOR SYMPTOM CHARTS.
PAGES 42-41 THROUGH 42-46 FOR TROUBLESHOOTING HINTS.

DTC 09-11 (CONTINUED)

TEST STEP		RESULT ▶	ACTION TO TAKE
9-5	CHECK CIRCUIT GC 19 FOR OPEN		
• Connectors F-110 and F-114 at hardtop and hard tonneau potentiometers disconnected. • Connector F-124 at ECU disconnected. • Using a Digital Volt/Ohm Meter (DVOM) set to ohm scale, connect one lead to pin 29 at ECU connector F-124. • Connect the second lead to pin C at hardtop potentiometer connector F-110. • Read ohmmeter. • **Is there 3 ohms or less?**		Yes ▶ No ▶	Circuits okay. Restore vehicle. Retest system. Repair circuit GC 19. Restore vehicle. Retest system.
9-6	CHECK CIRCUIT GC 16 AT HARDTOP POTENTIOMETER		
• Connector F-114 at hard tonneau potentiometer disconnected. • Connector F-124 at ECU disconnected. • Using a DVOM set to ohm scale, back probe and connect one lead to pin A at hardtop potentiometer connector F-110. • Back probe and connect the second lead to pin B at hardtop potentiometer connector F-110. • Read ohmmeter. • **Is there 1000 to 6500 ohms?**		Yes ▶ No ▶	Go to **9-7**. Replace hardtop potentiometer. Restore vehicle. Retest system.
9-7	CHECK CIRCUIT GC 16 FOR OPEN		
• Connector F-114 at hard tonneau potentiometer disconnected. • Access and disconnect hardtop potentiometer connector F-110. • Connector F-124 at ECU disconnected. • Using a DVOM set to ohm scale, connect one lead to pin 30 at ECU connector F-124. • Connect the second lead to pin B at hardtop potentiometer connector F-110. • Read ohmmeter. • **Is there 3 ohms or less?**		Yes ▶ No ▶	Circuits okay. Restore vehicle. Retest system. Repair circuit GC 16. Restore vehicle. Retest system.

PINPOINT TESTS

REFER TO: PAGES 42-15 THROUGH 42-17 FOR PRECAUTIONS BEFORE SERVICE, NOTES AND DEFINITIONS OF TERMS.
PAGES 42-33 THROUGH 42-40 FOR SYMPTOM CHARTS.
PAGES 42-41 THROUGH 42-46 FOR TROUBLESHOOTING HINTS.

DTC 12-14

TEST STEP		RESULT ▶	ACTION TO TAKE
12-1	CHECK HARD TONNEAU POTENTIOMETER AT ECU		
• Access and disconnect hardtop potentiometer connector F-110. • Access and disconnect connector F-124 at ECU. • Using a Digital Volt/Ohm Meter (DVOM) set to ohm scale, connect one lead to pin 15 at ECU connector F-124. • Connect the second lead to pin 29 at ECU connector F-124. • Read ohmmeter. • **Is there 4500 to 6200 ohms?**		Yes ▶ No ▶	Go to **12-2**. Go to **12-3**.
12-2	CHECK CIRCUIT GC 17 FROM POTENTIOMETER		
• Connector F-110 at hardtop potentiometer disconnected. • Connector F-124 at ECU disconnected. • Using a DVOM set to ohm scale, connect one lead to pin 15 at ECU connector F-124. • Connect the second lead to pin 32 at ECU connector F-124. • Read ohmmeter. • **Is there 1000 to 6500 ohms?**		Yes ▶ No ▶	Replace ECU. Restore vehicle. Retest system. Go to **12-6**.
12-3	CHECK HARD TONNEAU POTENTIOMETER		
• Connector F-110 at hardtop potentiometer disconnected. • Connector F-124 at ECU disconnected. • Using a DVOM set to ohm scale, back probe and connect one lead to pin A at hard tonneau potentiometer connector F-114. • Back probe and connect the second lead to pin C at hard tonneau potentiometer connector F-114. • Read ohmmeter. • **Is there 4500 to 5500 ohms?**		Yes ▶ No ▶	Go to **12-4**. Replace hard tonneau potentiometer. Restore vehicle. Retest system.
12-4	CHECK CIRCUIT GC 18 FOR OPEN		
• Connector F-110 at hardtop potentiometer disconnected. • Connector F-124 at ECU disconnected. • Access and disconnect hard tonneau potentiometer connector F-114. • Using a DVOM set to ohm scale, connect one lead to pin 15 at ECU connector F-124. • Connect the second lead to pin A at hard tonneau potentiometer connector F-114. • Read ohmmeter. • **Is there 3 ohms or less?**		Yes ▶ No ▶	Go to **12-5**. Repair circuit GC 18. Restore vehicle. Retest system.

PINPOINT TESTS

REFER TO: PAGES 42-15 THROUGH 42-17 FOR PRECAUTIONS BEFORE SERVICE, NOTES AND DEFINITIONS OF TERMS.
PAGES 42-33 THROUGH 42-40 FOR SYMPTOM CHARTS.
PAGES 42-41 THROUGH 42-46 FOR TROUBLESHOOTING HINTS.

DTC 12 (CONTINUED)

TEST STEP		RESULT ▶	ACTION TO TAKE
12-5	CHECK CIRCUIT GC 19 FOR OPEN		
• Connectors F-110 and F-114 at hardtop and hard tonneau potentiometers disconnected. • Connector F-124 at ECU disconnected. • Using a Digital Volt/Ohm Meter (DVOM) set to ohm scale, connect one lead to pin 29 at ECU connector F-124. • Connect the second lead to pin C at hard tonneau potentiometer connector F-114. • Read ohmmeter. • **Is there 3 ohms or less?**		Yes ▶ No ▶	Circuits okay. Restore vehicle. Retest system. Repair circuit GC 19. Restore vehicle. Retest system.
12-6	CHECK CIRCUIT GC 17 AT HARD TONNEAU POTENTIOMETER		
• Connector F-110 at hardtop potentiometer disconnected. • Connector F-124 at ECU disconnected. • Using a DVOM set to ohm scale, back probe and connect one lead to pin A at hard tonneau potentiometer connector F-114. • Back probe and connect the second lead to pin B at hard tonneau potentiometer connector F-114. • Read ohmmeter. • **Is there 1000 to 6500 ohms?**		Yes ▶ No ▶	Go to **12-7**. Replace hard tonneau potentiometer. Restore vehicle. Retest system.
12-7	CHECK CIRCUIT GC 17 FOR OPEN		
• Connector F-110 at hardtop potentiometer disconnected. • Access and disconnect connector F-114 at hard tonneau potentiometer. • Connector F-124 at ECU disconnected. • Using a DVOM set to ohm scale, connect one lead to pin 32 at ECU connector F-124. • Connect the second lead to pin B at hard tonneau potentiometer connector F-114. • Read ohmmeter. • **Is there 3 ohms or less?**		Yes ▶ No ▶	Circuits okay. Restore vehicle. Retest system. Repair circuit GC 17. Restore vehicle. Retest system.

PINPOINT TESTS

REFER TO: PAGES 42-15 THROUGH 42-17 FOR PRECAUTIONS BEFORE SERVICE, NOTES AND DEFINITIONS OF TERMS.
PAGES 42-33 THROUGH 42-40 FOR SYMPTOM CHARTS.
PAGES 42-41 THROUGH 42-46 FOR TROUBLESHOOTING HINTS.

DTC 15

TEST STEP		RESULT ▶	ACTION TO TAKE
15-1	CHECK FOR CODE 15 WITH HARDTOP POTENTIOMETER DISCONNECTED		
• Access and disconnect hardtop potentiometer connector F-110. • Clear DTCs from ECU memory. • Turn ignition to ON position. • Check for DTC 15. • **Did DTC 15 reoccur?**		Yes ▶	Replace hard tonneau potentiometer. Restore vehicle. Retest system.
		No ▶	Replace hardtop potentiometer. Restore vehicle. Retest system.

PINPOINT TESTS

REFER TO: PAGES 42-15 THROUGH 42-17 FOR PRECAUTIONS BEFORE SERVICE, NOTES AND DEFINITIONS OF TERMS.
PAGES 42-33 THROUGH 42-40 FOR SYMPTOM CHARTS.
PAGES 42-41 THROUGH 42-46 FOR TROUBLESHOOTING HINTS.

DTC 16

TEST STEP		RESULT ▶	ACTION TO TAKE
16-1	CHECK CIRCUIT GC 18 FOR VOLTAGE AT ECU		
• Access connector F-124 at ECU. • Using a Digital Volt/Ohm Meter (DVOM) set to DC volt, connect negative lead to known good ground. • Back probe and connect positive lead to pin 15 at ECU connector F-124. • Turn ignition to ON position. • Read voltmeter. • **Is 5.5 or more volts present?**		Yes ▶ No ▶	Go to **16-2.** Replace ECU. Restore vehicle. Retest system.
16-2	CHECK ECU VOLTAGE TO CIRCUIT GC 18		
• Disconnect connector F-124 at ECU. • Using a DVOM set to DC volt, connect negative lead to a known good ground. NOTE: BE CAREFUL WHILE CONNECTING DVOM TO ECU. • Connect the positive lead to pin 15 on ECU. • Turn ignition to ON position. • Read voltmeter. • **Is 4.5 to 5.5 volts present?**		Yes ▶ No ▶	Go to **16-3.** Replace ECU. Restore vehicle. Retest system.
16-3	CHECK CIRCUIT GC 18 FOR SHORT TO VOLTAGE		
• Connector F-124 at ECU disconnected. • Using a DVOM set to DC volt, connect negative lead to known good ground. • Connect the positive lead to pin 15 at ECU connector F-124. • Turn ignition to ON position. • Read voltmeter. • **Is there voltage present?**		Yes ▶ No ▶	Go to **16-4.** Replace ECU. Restore vehicle. Retest system.
16-4	CHECK CIRCUIT GC 18 FOR VOLTAGE WITH HARD TONNEAU POTENTIOMETER DISCONNECTED		
• Connector F-124 at ECU disconnected. • Disconnect hard tonneau potentiometer connector F-114. • Using a DVOM set to DC volt, connect negative lead to a known good ground. • Connect the positive lead to pin 15 at ECU connector F-124. • Turn ignition to ON position. • Read voltmeter. • **Is there voltage present?**		Yes ▶ No ▶	Go to **16-5.** Repair circuit GC 17. Restore vehicle. Retest system.

PINPOINT TESTS

REFER TO: PAGES 42-15 THROUGH 42-17 FOR PRECAUTIONS BEFORE SERVICE, NOTES AND DEFINITIONS OF TERMS.
PAGES 42-33 THROUGH 42-40 FOR SYMPTOM CHARTS.
PAGES 42-41 THROUGH 42-46 FOR TROUBLESHOOTING HINTS.

DTC 16 (CONTINUED)

TEST STEP		RESULT ▶	ACTION TO TAKE
16-5	CHECK CIRCUIT GC 18 FOR VOLTAGE WITH HARDTOP POTENTIOMETER DISCONNECTED		
• Connector F-124 at ECU disconnected. • Disconnect hardtop potentiometer connector F-110. • Using a DVOM set to DC volt, connect negative lead to a known good ground. • Connect the positive lead to pin 15 at ECU connector F-124. • Turn ignition to ON position. • Read voltmeter. • **Is there voltage present?**		Yes ▶ No ▶	Repair circuit GC 18. Restore vehicle. Retest system. Repair circuit GC 16. Restore vehicle. Retest system.

PINPOINT TESTS

REFER TO: PAGES 42-15 THROUGH 42-17 FOR PRECAUTIONS BEFORE SERVICE, NOTES AND DEFINITIONS OF TERMS.
PAGES 42-33 THROUGH 42-40 FOR SYMPTOM CHARTS.
PAGES 42-41 THROUGH 42-46 FOR TROUBLESHOOTING HINTS.

DTC 17

TEST STEP		RESULT ▶	ACTION TO TAKE
17-1	CHECK CIRCUIT GC 18 FOR VOLTAGE AT ECU		
• Access connector F-124 at ECU. • Using a Digital Volt/Ohm Meter (DVOM) set to DC volt, connect negative lead to known good ground. • Back probe and connect positive lead to pin 15 at ECU connector F-124. • Turn ignition to ON position. • Read voltmeter. • **Is 4.5 to 5.5 volts present?**		Yes ▶ No ▶	Replace ECU. Restore vehicle. Retest system. Go to **17-2.**
17-2	CHECK CIRCUIT GC 18 AND GC 19 FOR SHORT		
• Disconnect connector F-124 at ECU. • Disconnect connectors F-114 and F-110 at hard tonneau and hardtop potentiometers. • Using a DVOM set to ohm scale, connect one lead to pin 15 at ECU connector F-124. • Connect the second lead to pin 29 at ECU connector F-124. • Read ohmmeter. • **Is there continuity?**		Yes ▶ No ▶	Repair circuits GC 18 and GC 19. Restore vehicle. Retest system. Go to **17-3.**
17-3	CHECK CIRCUIT GC 18 FOR SHORT TO GROUND		
• Connectors F-114 and F-110 disconnected at hardtop and hard tonneau potentiometers. • Connector F-124 at ECU disconnected. • Using a DVOM set to ohm scale, connect negative lead to known good ground. • Connect the positive lead to pin 15 at ECU connector F-124. • Read ohmmeter. • **Is there continuity?**		Yes ▶ No ▶	Repair circuit GC 18. Restore vehicle. Retest system. Go to **17-4.**
17-4	CHECK HARDTOP POTENTIOMETER		
• Connect hardtop potentiometer connector F-110. • Using a DVOM set to ohm scale, connect one lead to pin 15 at ECU connector F-124. • Connect the second lead to pin 29 at ECU connector F-124. • Read ohmmeter. • **Is there 4500 to 6200 ohms?**		Yes ▶ No ▶	Go to **17-5.** Replace hardtop potentiometer. Restore vehicle. Retest system.
17-5	CHECK HARD TONNEAU POTENTIOMETER		
• Disconnect hardtop potentiometer connector F-110. • Connect hard tonneau potentiometer connector F-114. • Using a DVOM set to ohm scale, connect one lead to pin 15 at ECU connector F-124. • Connect the second lead to pin 29 at ECU connector F-124. • Read ohmmeter. • **Is there 4500 to 6200 ohms?**		Yes ▶ No ▶	Circuits okay. Restore vehicle. Retest system. Replace hard tonneau potentiometer. Restore vehicle. Retest system.

PINPOINT TESTS

REFER TO: PAGES 42-15 THROUGH 42-17 FOR PRECAUTIONS BEFORE SERVICE, NOTES AND DEFINITIONS OF TERMS.
PAGES 42-33 THROUGH 42-40 FOR SYMPTOM CHARTS.
PAGES 42-41 THROUGH 42-46 FOR TROUBLESHOOTING HINTS.

DTC 18

TEST STEP		RESULT ▶	ACTION TO TAKE
18-1	CHECK HEADER LATCH OPERATION		
• Turn ignition to ON position. • Press hardtop control switch to OPEN position until retractable quarter windows open. Note: Refer to DTC 30 if retractable quarter windows did not retract properly. • Press upward on hardtop from inside vehicle at header area. • **Did header latches unlatch properly?**		Yes ▶ No ▶	Go to **18-2.** Go to **18-4.**
18-2	CHECK CIRCUIT GC 21 FOR LOW REFERENCE VOLTAGE AT ECU		
• Access connector F-124 at ECU. • Using Digital Volt/Ohm Meter (DVOM) set to DC volt, connect negative lead to known good ground. • Back probe and connect positive lead to pin 38 at ECU connector F-124. • Turn ignition to ON position. • Read voltmeter. • **Is 0.7 volt present?**		Yes ▶ No ▶	Replace ECU. Restore vehicle. Retest system. Go to **18-3.**
18-3	CHECK CIRCUIT GC 21 FOR HIGH REFERENCE VOLTAGE AT ECU		
• Access connector F-124 at ECU. • Using DVOM set to DC volt, connect negative lead to known good ground. • Back probe and connect positive lead to pin 38 at ECU connector F-124. • Turn ignition to ON position. • Read voltmeter. • **Are 2.1 volts present?**		Yes ▶ No ▶	Replace LH header latch limit switch. Restore vehicle. Retest system. Refer to other DTC's that may have occurred.
18-4	CHECK CIRCUIT GC 34 FOR VOLTAGE AT ECU		
• Access connector F-125 at ECU. • Using Digital Volt/Ohm Meter (DVOM) set to DC volt, connect negative lead to known good ground. • Connect positive lead to pin 15 at ECU connector F-125. • Turn ignition to ON position. • Press hardtop control switch to OPEN position (make sure quarter windows are retracted). • Read voltmeter. • **Is system voltage present?**		Yes ▶ No ▶	Go to **18-5.** Replace ECU. Restore vehicle. Retest system.

PINPOINT TESTS

REFER TO: PAGES 42-15 THROUGH 42-17 FOR PRECAUTIONS BEFORE SERVICE, NOTES AND DEFINITIONS OF TERMS.
PAGES 42-33 THROUGH 42-40 FOR SYMPTOM CHARTS.
PAGES 42-41 THROUGH 42-46 FOR TROUBLESHOOTING HINTS.

DTC 18 (CONTINUED)

TEST STEP	RESULT ▶	ACTION TO TAKE
18-5 CHECK CIRCUIT GC 33 FOR VOLTAGE AT ECU		
• Access connector F-125 at ECU. • Using Digital Volt/Ohm Meter (DVOM) set to DC volt, connect negative lead to known good ground. • Connect positive lead to pin 6 at ECU connector F-125. • Turn ignition to ON position. • Press hardtop control switch to CLOSE position. • Read voltmeter. • **Is system voltage present?**	Yes ▶ No ▶	Go to **18-6.** Replace ECU. Restore vehicle. Retest system.
18-6 CHECK VOLTAGE AT HEADER LATCH MOTOR		
• Access and disconnect header latch motor connector E-117. • Using DVOM set to DC volt, connect negative lead to pin B at header latch motor connector E-117. • Connect positive lead to pin A at header latch motor connector E-117. • Turn ignition to ON position. • Press hardtop control switch to OPEN position (make sure quarter windows are retracted). • Read voltmeter. • **Is system voltage present?**	Yes ▶ No ▶	Replace header latch motor. Restore vehicle. Retest system. Go to **18-7.**
18-7 CHECK CIRCUITS GC 33 AND GC 34		
• Connector E-117 at header latch motor disconnected. • Using DVOM set to DC volt, connect negative lead to a known good ground. • Connect positive lead to pin B at header latch motor connector E-117. • Turn ignition to ON position. • Press hardtop control switch to OPEN position. • Read voltmeter. • **Is system voltage present?**	Yes ▶ No ▶	Repair circuit GC 34. Restore vehicle. Retest system. Repair circuit GC 33. Restore vehicle. Retest system.

PINPOINT TESTS

REFER TO: PAGES 42-15 THROUGH 42-17 FOR PRECAUTIONS BEFORE SERVICE, NOTES AND DEFINITIONS OF TERMS.
PAGES 42-33 THROUGH 42-40 FOR SYMPTOM CHARTS.
PAGES 42-41 THROUGH 42-46 FOR TROUBLESHOOTING HINTS.

DTC 19

TEST STEP	RESULT ▶	ACTION TO TAKE
19-1 CHECK CIRCUIT GC 21 FOR SHORT TO GROUND		
• Access and disconnect connector F-124 at ECU. • Using Digital Volt/Ohm Meter (DVOM) set to ohm scale, connect negative lead to a known good ground. • Connect the positive lead to pin 38 at ECU connector F-124. • Read ohmmeter. • **Is there continuity?**	Yes ▶ No ▶	Go to **19-2.** Replace ECU. Restore vehicle. Retest system.
19-2 CHECK CIRCUIT GC 20 FOR VOLTAGE		
• Connect connector F-124 at ECU. • Access and disconnect header latch limit switch connector E-115. • Using DVOM set to DC volt, connect negative lead to a known good ground. • Connect positive lead to pin A at header latch limit switch connector E-115. • Turn ignition to ON position. • Read voltmeter. • **Is 2.1 volts present?**	Yes ▶ No ▶	Go to **19-3.** Repair circuit GC 20 for open. Repair circuit GC 21 for short to ground. Restore vehicle. Retest system.
19-3 CHECK CIRCUIT GC 22 FOR VOLTAGE		
• Connector E-115 at LH header latch limit switch disconnected. • Using DVOM set to DC volt, connect negative lead to a known good ground. • Connect the positive lead to pin C at LH header latch limit switch connector E-115. • Turn ignition to ON position. • Read voltmeter. • **Is 0.7 volt present?**	Yes ▶ No ▶	Go to **19-4.** Repair circuit GC 22 for open. Repair circuit GC 21 for short to ground. Restore vehicle. Retest system.
19-4 CHECK HEADER LATCH LIMIT SWITCH		
• Connector E-115 at LH header latch limit switch disconnected. • Using DVOM set on ohm scale, connect one lead to pin A of LH header latch limit switch. • Connect second lead to pin B of LH header latch limit switch. • Check for continuity. • Connect one lead to pin B of LH header latch limit switch. • Connect second lead to pin C of LH header latch limit switch. • Check for continuity. • Switch pressed = continuity between A and B. • Switch open = continuity between B and C. • **Does switch operate properly?**	Yes ▶ No ▶	Repair circuit GC 21 for open and short to ground. Restore vehicle. Retest system. Replace LH header latch limit switch. Repair circuit GC 21 for short to ground. Restore vehicle. Retest system.

PINPOINT TESTS

REFER TO: PAGES 42-15 THROUGH 42-17 FOR PRECAUTIONS BEFORE SERVICE, NOTES AND DEFINITIONS OF TERMS.
PAGES 42-33 THROUGH 42-40 FOR SYMPTOM CHARTS.
PAGES 42-41 THROUGH 42-46 FOR TROUBLESHOOTING HINTS.

DTC 20

TEST STEP		RESULT ▶	ACTION TO TAKE
20-1	CHECK CIRCUIT GC 21 AT ECU FOR VOLTAGE		
• Access connector F-124 at ECU. • Using Digital Volt/Ohm Meter (DVOM) set to DC volt, connect negative lead to a known good ground. • Back probe and connect the positive lead to pin 38 at ECU connector F-124. • Turn ignition to ON position. • Turn on all accessories and lights and operate hardtop system. • Read voltmeter. • **Is there 3.0 volts or more?**		Yes ▶ No ▶	Go to **20-2**. Replace ECU. Restore vehicle. Retest system.
20-2	CHECK CIRCUIT GC 20 AT LH HEADER LATCH LIMIT SWITCH FOR VOLTAGE		
• Access and disconnect LH header latch limit switch connector E-115. • Using DVOM set to DC volt, connect negative lead to a known good ground. • Connect positive lead to pin A at LH header latch limit switch connector E-115. • Turn ignition to ON position. • Turn on all accessories and lights. • Read voltmeter. • **Is voltage over 2.1 volts?**		Yes ▶ No ▶	Repair circuit GC 20. Restore vehicle. Retest system. Go to **20-3**.
20-3	CHECK CIRCUIT GC 22 AT LH HEADER LATCH LIMIT SWITCH FOR VOLTAGE		
• Connector E-115 at LH header latch limit switch disconnected. • Using DVOM set to DC volt, connect negative lead to a known good ground. • Connect positive lead to pin C at LH header latch limit switch connector E-115. • Turn ignition to ON position. • Turn on all accessories and lights on and operate hardtop system. • Read voltmeter. • **Is voltage over 0.7 volts?**		Yes ▶ No ▶	Repair circuit GC 22. Restore vehicle. Retest system. Repair circuit GC 21. Restore vehicle. Retest system.

PINPOINT TESTS

REFER TO: **PAGES 42-15 THROUGH 42-17 FOR PRECAUTIONS BEFORE SERVICE, NOTES AND DEFINITIONS OF TERMS.**
PAGES 42-33 THROUGH 42-40 FOR SYMPTOM CHARTS.
PAGES 42-41 THROUGH 42-46 FOR TROUBLESHOOTING HINTS.

DTC 21

TEST STEP	RESULT ▶	ACTION TO TAKE
21-1 CHECK CIRCUIT GC 21 FOR VOLTAGE AT ECU		
• Unlatch header latches. • Access connector F-124 at ECU. • Using Digital Volt/Ohm Meter (DVOM) set to DC volt, connect negative lead to known good ground. • Back probe and connect the positive lead to pin 38 at ECU connector F-124. • Turn ignition to ON position. • Read voltmeter. • **Is 0.7 or 2.1 volts present?**	Yes ▶ No ▶	Replace ECU. Restore vehicle. Retest system. Go to **21-2.**
21-2 CHECK CIRCUIT GC 21 FOR VOLTAGE AT LH HEADER LATCH LIMIT SWITCH		
• Access LH header latch limit switch connector E-115. • Using DVOM set to DC volt, connect negative lead to a known good ground. • Back probe and connect positive lead to pin B at LH header latch limit switch connector E-115. • Turn ignition to ON position. • Read voltmeter. • **Is 0.7 or 2.1 volts present?**	Yes ▶ No ▶	Repair circuit GC 21. Restore vehicle. Retest system. Go to **21-3.**
21-3 CHECK CIRCUIT GC 20 FOR VOLTAGE		
• Disconnect LH header latch limit switch connector E-115. • Using DVOM set to DC volt, connect negative lead to a known good ground. • Connect the positive lead to pin A at LH header latch limit switch connector E-115. • Turn ignition to ON position. • Read voltmeter. • **Is 2.1 volts present?**	Yes ▶ No ▶	Go to **21-4.** Repair circuit GC 20. Restore vehicle. Retest system.
21-4 CHECK CIRCUIT GC 22 FOR VOLTAGE		
• Connector E-115 at LH header latch limit switch disconnected. • Using DVOM set to DC volt, connect negative lead to a known good ground. • Connect positive lead to pin C at LH header latch limit switch connector E-115. • Turn ignition to ON position. • Read voltmeter. • **Is 0.7 volts present?**	Yes ▶ No ▶	Replace LH header latch position switch. Restore vehicle. Retest system. Repair circuit GC 22. Restore vehicle. Retest system.

PINPOINT TESTS

REFER TO: PAGES 42-15 THROUGH 42-17 FOR PRECAUTIONS BEFORE SERVICE, NOTES AND DEFINITIONS OF TERMS.
PAGES 42-33 THROUGH 42-40 FOR SYMPTOM CHARTS.
PAGES 42-41 THROUGH 42-46 FOR TROUBLESHOOTING HINTS.

DTC 22

TEST STEP		RESULT ▶	ACTION TO TAKE
22-1	CHECK HEADER LATCH OPERATION		
• Turn ignition to ON position. • Press hardtop control switch to CLOSE position. • Press upward on hardtop from inside vehicle at header area. • **Did header latches latch properly?**		Yes ▶ No ▶	Go to **22-2**. Go to **22-4**.
22-2	CHECK CIRCUIT GC 23 FOR HIGH REFERENCE VOLTAGE AT ECU		
• Access connector F-124 at ECU. • Using Digital Volt/Ohm Meter (DVOM) set to DC volt, connect negative lead to known good ground. • Back probe and connect positive lead to pin 24 at ECU connector F-124. • Turn ignition to ON position. • Read voltmeter. • **Is 2.1 volts present?**		Yes ▶ No ▶	Replace ECU. Restore vehicle. Retest system. Go to **22-3**.
22-3	CHECK CIRCUIT GC 23 FOR LOW REFERENCE VOLTAGE AT ECU		
• Access connector F-124 at ECU. • Using DVOM set to DC volt, connect negative lead to known good ground. • Back probe and connect positive lead to pin 24 at ECU connector F-124. • Turn ignition to ON position. • Read voltmeter. • **Are 0.7 volts present?**		Yes ▶ No ▶	Replace RH header unlatch limit switch. Restore vehicle. Retest system. Refer to other DTCs that may have occurred.
22-4	CHECK CIRCUIT GC 34 FOR VOLTAGE AT ECU		
• Manually latch header latches. • Access connector F-125 at ECU. • Using Digital Volt/Ohm Meter (DVOM) set to DC volt, connect negative lead to known good ground. • Connect positive lead to pin 15 at ECU connector F-125. • Turn ignition to ON position. • Press hardtop control switch to OPEN position. • Read voltmeter. • **Is system voltage present?**		Yes ▶ No ▶	Go to **22-5**. Replace ECU. Restore vehicle. Retest system.
22-5	CHECK CIRCUIT GC 33 FOR VOLTAGE AT ECU		
• Access connector F-125 at ECU. • Using Digital Volt/Ohm Meter (DVOM)) set to DC volt, connect negative lead to known good ground. • Connect positive lead to pin 6 at ECU connector F-125. • Turn ignition to ON position. • Press hardtop control switch to CLOSE position. • Read voltmeter. • **Is system voltage present?**		Yes ▶ No ▶	Go to **22-6**. Replace ECU. Restore vehicle. Retest system.

PINPOINT TESTS

REFER TO: PAGES 42-15 THROUGH 42-17 FOR PRECAUTIONS BEFORE SERVICE, NOTES AND DEFINITIONS OF TERMS.
PAGES 42-33 THROUGH 42-40 FOR SYMPTOM CHARTS.
PAGES 42-41 THROUGH 42-46 FOR TROUBLESHOOTING HINTS.

DTC 22 (CONTINUED)

TEST STEP	RESULT ▶	ACTION TO TAKE
22-6 CHECK VOLTAGE AT HEADER LATCH MOTOR		
• Access and disconnect header latch motor connector E-117. • Using DVOM set to DC volt, connect negative lead to pin B at header latch motor connector E-117. • Connect positive lead to pin A at header latch motor connector E-117. • Turn ignition to ON position. • Press hardtop control switch to OPEN position. • Read voltmeter. • **Is system voltage present?**	Yes ▶ No ▶	Replace header latch motor. Restore vehicle. Retest system. Go to **22-7.**
22-7 CHECK CIRCUITS GC 33 AND GC 34		
• Connector E-117 at header latch motor disconnected. • Using DVOM set to DC volt, connect negative lead to a known good ground. • Connect positive lead to pin B at header latch motor connector E-117. • Turn ignition to ON position. • Press hardtop control switch to OPEN position. • Read voltmeter. • **Is system voltage present?**	Yes ▶ No ▶	Repair circuit GC 34. Restore vehicle. Retest system. Repair circuit GC 33. Restore vehicle. Retest system.

PINPOINT TESTS

REFER TO: PAGES 42-15 THROUGH 42-17 FOR PRECAUTIONS BEFORE SERVICE, NOTES AND DEFINITIONS OF TERMS.
PAGES 42-33 THROUGH 42-40 FOR SYMPTOM CHARTS.
PAGES 42-41 THROUGH 42-46 FOR TROUBLESHOOTING HINTS.

DTC 23

TEST STEP	RESULT ▶	ACTION TO TAKE
23-1 CHECK CIRCUIT GC 23 FOR SHORT TO GROUND		
• Access and disconnect connector F-124 at ECU. • Using Digital Volt/Ohm Meter (DVOM) set to ohm scale, connect negative lead to a known good ground. • Connect the positive lead to pin 24 at ECU connector F-124. • Read ohmmeter. • **Is there continuity?**	Yes ▶ No ▶	Go to **23-2.** Replace ECU. Restore vehicle. Retest system.
23-2 CHECK CIRCUIT GC 20 FOR VOLTAGE		
• Connect connector F-124 at ECU. • Access and disconnect header unlatch limit switch connector E-113. • Using DVOM set to DC volt, connect negative lead to a known good ground. • Connect positive lead to pin A at header unlatch limit switch connector E-113. • Turn ignition to ON position. • Read voltmeter. • **Is 2.1 volts present?**	Yes ▶ No ▶	Go to **23-3.** Repair circuit GC 20 for open. Repair circuit GC 23 for short to ground. Restore vehicle. Retest system.
23-3 CHECK CIRCUIT GC 22 FOR VOLTAGE		
• Connector E-113 at header unlatch limit switch disconnected. • Using DVOM set to DC volt, connect negative lead to a known good ground. • Connect the positive lead to pin C at header unlatch limit switch connector E-113. • Turn ignition to ON position. • Read voltmeter. • **Is 0.7 volt present?**	Yes ▶ No ▶	Go to **23-4.** Repair circuit GC 22 for open. Repair circuit GC 23 for short to ground. Restore vehicle. Retest system.
23-4 CHECK HEADER UNLATCH LIMIT SWITCH		
• Connector E-115 at header unlatch limit switch disconnected. • Using DVOM set on ohm scale, connect one lead to pin A of header unlatch limit switch. • Connect second lead to pin B of header unlatch limit switch. • Check for continuity. • Connect one lead to pin B of header unlatch limit switch. • Connect second lead to pin C of header unlatch limit switch. • Check for continuity. • Switch pressed = continuity between A and B. • Switch open = continuity between B and C. • **Does switch operate properly?**	Yes ▶ No ▶	Repair circuit GC 23 for open and short to ground. Restore vehicle. Retest system. Replace header unlatch limit switch. Repair circuit GC 23 for short to ground. Restore vehicle. Retest system.

PINPOINT TESTS

REFER TO: PAGES 42-15 THROUGH 42-17 FOR PRECAUTIONS BEFORE SERVICE, NOTES AND DEFINITIONS OF TERMS.
PAGES 42-33 THROUGH 42-40 FOR SYMPTOM CHARTS.
PAGES 42-41 THROUGH 42-46 FOR TROUBLESHOOTING HINTS.

DTC 24

TEST STEP		RESULT ▶	ACTION TO TAKE
24-1	CHECK CIRCUIT GC 23 AT ECU FOR VOLTAGE		
• Access connector F-124 at ECU. • Using Digital Volt/Ohm Meter (DVOM) set to DC volt, connect negative lead to a known good ground. • Back probe and connect the positive lead to pin 24 at ECU connector F-124. • Turn ignition to ON position. • Turn on all accessories and lights and operate hardtop system. • Read voltmeter. • **Is there 3.0 volts or more?**		Yes ▶ No ▶	Go to **24-2**. Replace ECU. Restore vehicle. Retest system.
24-2	CHECK CIRCUIT GC 20 AT RH HEADER UNLATCH LIMIT SWITCH FOR VOLTAGE		
• Access and disconnect RH header unlatch limit switch connector E-113. • Using DVOM set to DC volt, connect negative lead to a known good ground. • Connect positive lead to pin A at RH header unlatch limit switch connector E-113. • Turn ignition to ON position. • Turn on all accessories and lights and operate hardtop system. • Read voltmeter. • **Is voltage over 2.1 volts?**		Yes ▶ No ▶	Repair circuit GC 20. Restore vehicle. Retest system. Go to **24-3**.
24-3	CHECK CIRCUIT GC 22 AT RH HEADER UNLATCH LIMIT SWITCH FOR VOLTAGE		
• Connector E-113 at RH header unlatch limit switch disconnected. • Using DVOM set to DC volt, connect negative lead to a known good ground. • Connect positive lead to pin C at RH header unlatch limit switch connector E-113. • Turn ignition to ON position. • Turn on all accessories and lights and operate hardtop system. • Read voltmeter. • **Is voltage over 0.7 volts?**		Yes ▶ No ▶	Repair circuit GC 22. Restore vehicle. Retest system. Repair circuit GC 23. Restore vehicle. Retest system.

PINPOINT TESTS

REFER TO: PAGES 42-15 THROUGH 42-17 FOR PRECAUTIONS BEFORE SERVICE, NOTES AND DEFINITIONS OF TERMS.
PAGES 42-33 THROUGH 42-40 FOR SYMPTOM CHARTS.
PAGES 42-41 THROUGH 42-46 FOR TROUBLESHOOTING HINTS.

DTC 25

TEST STEP		RESULT ▶	ACTION TO TAKE
25-1	CHECK CIRCUIT GC 23 FOR VOLTAGE AT ECU		
• Unlatch header latches. • Access connector F-124 at ECU. • Using Digital Volt/Ohm Meter (DVOM) set to DC volt, connect negative lead to known good ground. • Back probe and connect positive lead to pin 24 at ECU connector F-124. • Turn ignition to ON position. • Read voltmeter. • **Is 0.7 or 2.1 volts present?**		Yes ▶ No ▶	Replace ECU. Restore vehicle. Retest system. Go to **25-2**.
25-2	CHECK CIRCUIT GC 23 FOR VOLTAGE AT RH HEADER UNLATCH LIMIT SWITCH		
• Access RH header unlatch limit switch. • Using DVOM set to DC volt, connect negative lead to a known good ground. • Back probe and connect positive lead to pin B at RH header unlatch limit switch connector E-113. • Turn ignition to ON position. • Read voltmeter. • **Is 0.7 or 2.1 volts present?**		Yes ▶ No ▶	Repair circuit GC 23. Restore vehicle. Retest system. Go to **25-3**.
25-3	CHECK CIRCUIT GC 20 FOR VOLTAGE		
• Disconnect header unlatch limit switch connector E-113. • Using DVOM set to DC volt, connect negative lead to a known good ground. • Connect the positive lead to pin A at RH header unlatch limit switch connector E-113. • Turn ignition to ON position. • Read voltmeter. • **Is 2.1 volts present?**		Yes ▶ No ▶	Go to **25-4**. Repair circuit GC 20. Restore vehicle. Retest system.
25-4	CHECK CIRCUIT GC 22 FOR VOLTAGE		
• Connector E-113 at RH header unlatch limit switch disconnected. • Using DVOM set to DC volt, connect negative lead to a known good ground. • Connect positive lead to pin C at RH header unlatch limit switch connector E-113. • Turn ignition to ON position. • Read voltmeter. • **Is 0.7 volts present?**		Yes ▶ No ▶	Replace RH header unlatch limit switch. Restore vehicle. Retest system. Repair circuit GC 22. Restore vehicle. Retest system.

PINPOINT TESTS

REFER TO: PAGES 42-15 THROUGH 42-17 FOR PRECAUTIONS BEFORE SERVICE, NOTES AND DEFINITIONS OF TERMS.
PAGES 42-33 THROUGH 42-40 FOR SYMPTOM CHARTS.
PAGES 42-41 THROUGH 42-46 FOR TROUBLESHOOTING HINTS.

DTC 26

TEST STEP		RESULT ▶	ACTION TO TAKE
26-1	CHECK RETRACTABLE QUARTER WINDOW OPERATION		
• Turn ignition to ON position. • Press hardtop control switch to CLOSE position. • Observe retractable quarter window operation. NOTE: Tonneau must latch before quarter windows will extend. • **Did retractable quarter windows extend properly?**		Yes ▶ No ▶	Go to **26-2**. Go to **26-5**.
26-2	CHECK CIRCUIT GC 57 FOR LOW REFERENCE VOLTAGE AT ECU		
• Access connector F-124 at ECU. • Using Digital Volt/Ohm Meter (DVOM) set to DC volt, connect negative lead to known good ground. • Back probe and connect positive lead to pin 41 at ECU connector F-124. • Turn ignition to ON position. • Read voltmeter. • **Is 0.7 volt present?**		Yes ▶ No ▶	Replace ECU. Restore vehicle. Retest system. Go to **26-3**.
26-3	CHECK CIRCUIT GC 57 FOR HIGH REFERENCE VOLTAGE AT ECU		
• Access connector F-124 at ECU. • Using DVOM set to DC volt, connect negative lead to known good ground. • Back probe and connect positive lead to pin 41 at ECU connector F-124. • Turn ignition to ON position. • Read voltmeter. • **Are 2.1 volts present?**		Yes ▶ No ▶	Go to **26-4**. Refer to other DTCs that may have occurred.
26-4	CHECK RETRACTABLE WINDOW EXTEND LIMIT SWITCH ADJUSTMENT		
• Access retractable quarter window extend limit switch. • Check retractable quarter window extend limit switch adjustment. • **Is retractable quarter window extend limit switch adjusted properly?**		Yes ▶ No ▶	Replace retractable quarter window extend switch. Restore vehicle. Retest system. Adjust retractable quarter window extend switch as necessary. Restore vehicle. Retest system.
26-5	CHECK CIRCUIT GC 37 FOR VOLTAGE AT ECU		
• Access connector F-123 at ECU. • Using Digital Volt/Ohm Meter (DVOM) set to DC volt, connect negative lead to known good ground. • Connect positive lead to pin 12 at ECU connector F-123. • Turn ignition to ON position. • Press hardtop control switch to OPEN position. • Read voltmeter. • **Is system voltage present?**		Yes ▶ No ▶	Go to **26-6**. Replace ECU. Restore vehicle. Retest system.

TSB Revision

PINPOINT TESTS

REFER TO: PAGES 42-15 THROUGH 42-17 FOR PRECAUTIONS BEFORE SERVICE, NOTES AND DEFINITIONS OF TERMS.
PAGES 42-33 THROUGH 42-40 FOR SYMPTOM CHARTS.
PAGES 42-41 THROUGH 42-46 FOR TROUBLESHOOTING HINTS.

DTC 26 (CONTINUED)

TEST STEP		RESULT ▶	ACTION TO TAKE
26-6	CHECK CIRCUIT GC 36 FOR VOLTAGE AT ECU		
• Access connector F-123 at ECU. • Using Digital Volt/Ohm Meter (DVOM) set to DC volt, connect negative lead to known good ground. • Connect positive lead to pin 11 at ECU connector F-123. • Turn ignition to ON position. • Press hardtop control switch to CLOSE position. • Read voltmeter. • **Is system voltage present?**		Yes ▶ No ▶	Go to **26-7.** Replace ECU. Restore vehicle. Retest system.
26-7	CHECK VOLTAGE AT RETRACTABLE QUARTER WINDOW MOTOR		
• Access and disconnect retractable quarter window motor connector E-124. • Using DVOM set to DC volt, connect negative lead to pin A at retractable quarter window motor connector E-124. • Connect positive lead to pin B at retractable quarter window motor connector E-124. • Turn ignition to ON position. • Press hardtop control switch to OPEN position. • Read voltmeter. • **Is system voltage present?**		Yes ▶ No ▶	Replace retractable quarter window motor. Restore vehicle. Retest system. Go to **26-8.**
26-8	CHECK CIRCUITS GC 36 AND GC 37		
• Connector E-124 at retractable quarter window motor disconnected. • Using DVOM set to DC volt, connect negative lead to a known good ground. • Connect positive lead to pin B at retractable quarter window motor connector E-124. • Turn ignition to ON position. • Press hardtop control switch to OPEN position. • Read voltmeter. • **Is system voltage present?**		Yes ▶ No ▶	Repair circuit GC 36. Restore vehicle. Retest system. Repair circuit GC 37. Restore vehicle. Retest system.

PINPOINT TESTS

REFER TO: PAGES 42-15 THROUGH 42-17 FOR PRECAUTIONS BEFORE SERVICE, NOTES AND DEFINITIONS OF TERMS.
PAGES 42-33 THROUGH 42-40 FOR SYMPTOM CHARTS.
PAGES 42-41 THROUGH 42-46 FOR TROUBLESHOOTING HINTS.

DTC 27

TEST STEP	RESULT ▶	ACTION TO TAKE
27-1 CHECK CIRCUIT GC 57 FOR SHORT TO GROUND		
• Access and disconnect connector F-124 at ECU. • Using Digital Volt/Ohm Meter (DVOM) set to ohm scale, connect negative lead to a known good ground. • Connect the positive lead to pin 41 at ECU connector F-124. • Read ohmmeter. • **Is there continuity?**	Yes ▶ No ▶	Go to **27-2.** Replace ECU. Restore vehicle. Retest system.
27-2 CHECK CIRCUIT GC 20 FOR VOLTAGE		
• Connect connector F-124 at ECU. • Access and disconnect retractable quarter window extend limit switch connector E-123. • Using DVOM set to DC volt, connect negative lead to a known good ground. • Connect positive lead to pin C at retractable quarter window extend limit switch connector E-123. • Turn ignition to ON position. • Read voltmeter. • **Is 2.1 volts present?**	Yes ▶ No ▶	Go to **27-3.** Repair circuit GC 20 for open. Repair circuit GC 57 for short to ground. Restore vehicle. Retest system.
27-3 CHECK CIRCUIT GC 22 FOR VOLTAGE		
• Connector E-123 at retractable quarter window limit switch disconnected. • Using DVOM set to DC volt, connect negative lead to a known good ground. • Connect the positive lead to pin A at retractable quarter window extend limit switch connector E-123. • Read voltmeter. • **Is 0.7 volt present?**	Yes ▶ No ▶	Go to **27-4.** Repair circuit GC 22 for open. Repair circuit GC 57 for short to ground. Restore vehicle. Retest system.
27-4 CHECK RETRACTABLE QUARTER WINDOW EXTEND LIMIT SWITCH		
• Connector E-123 at retractable quarter window extend limit switch disconnected. • Using DVOM set on ohm scale, connect one lead to pin A of retractable quarter window extend limit switch. • Connect the second lead to pin B of retractable quarter window extend limit switch. • Check for continuity. • Connect one lead to pin B of retractable quarter window extend limit switch. • Connect second lead to pin C of retractable quarter window extend limit switch. • Check for open. NOTE: Readings are with quarter windows retracted and switch in proper position. If windows are retracted, readings will be opposite. • **Does switch operate properly?**	Yes ▶ No ▶	Repair circuit GC 57 for open and short to ground. Restore vehicle. Retest system. Replace retractable quarter window extend limit switch. Repair circuit GC 57 for short to ground. Restore vehicle. Retest system.

PINPOINT TESTS

REFER TO: PAGES 42-15 THROUGH 42-17 FOR PRECAUTIONS BEFORE SERVICE, NOTES AND DEFINITIONS OF TERMS.
PAGES 42-33 THROUGH 42-40 FOR SYMPTOM CHARTS.
PAGES 42-41 THROUGH 42-46 FOR TROUBLESHOOTING HINTS.

DTC 28

TEST STEP		RESULT ▶	ACTION TO TAKE
28-1	CHECK CIRCUIT GC 57 AT ECU FOR VOLTAGE		
• Access connector F-124 at ECU. • Using a Digital Volt/Ohm Meter (DVOM) set to DC volt, connect negative lead to a known good ground. • Back probe and connect the positive lead to pin 41 at ECU connector F-124. • Turn ignition to ON position. • Turn on all accessories and lights and operate hardtop system. • Read voltmeter. • **Is there 3.0 volts or more?**		Yes ▶ No ▶	Go to **28-2.** Replace ECU. Restore vehicle. Retest system.
28-2	CHECK CIRCUIT GC 20 AT RETRACTABLE QUARTER WINDOW EXTEND LIMIT SWITCH FOR VOLTAGE		
• Access and disconnect retractable quarter window extend limit switch connector E-123. • Using DVOM set to DC volt, connect negative lead to a known good ground. • Connect positive lead to pin C at retractable quarter window extend limit switch connector E-123. • Turn ignition to ON position. • Turn on all accessories and lights and operate hardtop system. • Read voltmeter. • **Is voltage over 2.1 volts?**		Yes ▶ No ▶	Repair circuit GC 20. Restore vehicle. Retest system. Go to **28-3.**
28-3	CHECK CIRCUIT GC 22 AT RETRACTABLE QUARTER WINDOW EXTEND LIMIT SWITCH FOR VOLTAGE		
• Connector E-123 at retractable quarter window limit switch disconnected. • Using DVOM set to DC volt, connect negative lead to a known good ground. • Connect positive lead to pin A at retractable quarter window extend limit switch connector E-123. • Turn ignition to ON position. • Turn on all accessories and lights and operate hardtop system. • Read voltmeter. • **Is voltage over 0.7 volts?**		Yes ▶ No ▶	Repair circuit GC 22. Restore vehicle. Retest system. Repair circuit GC 57. Restore vehicle. Retest system.

PINPOINT TESTS

REFER TO: PAGES 42-15 THROUGH 42-17 FOR PRECAUTIONS BEFORE SERVICE, NOTES AND DEFINITIONS OF TERMS.
PAGES 42-33 THROUGH 42-40 FOR SYMPTOM CHARTS.
PAGES 42-41 THROUGH 42-46 FOR TROUBLESHOOTING HINTS.

DTC 29

TEST STEP		RESULT ▶	ACTION TO TAKE
29-1	CHECK CIRCUIT GC 57 FOR VOLTAGE AT ECU		
• Access connector F-124 at ECU. • Using Digital Volt/Ohm Meter (DVOM) set to DC volt, connect negative lead to known good ground. • Back probe and connect the positive lead to pin 41 at ECU connector F-124. • Turn ignition to ON position. • Read voltmeter. • **Is 0.7 or 2.1 volts present?**		Yes ▶ No ▶	Replace ECU. Restore vehicle. Retest system. Go to **29-2.**
29-2	CHECK CIRCUIT GC 57 FOR VOLTAGE AT RETRACTABLE QUARTER WINDOW EXTEND LIMIT SWITCH		
• Access retractable quarter window extend limit switch. • Using DVOM set to DC volt, connect negative lead to a known good ground. • Back probe and connect positive lead to pin B at retractable quarter window extend limit switch connector E-123. • Turn ignition to ON position. • Read voltmeter. • **Is 0.7 or 2.1 volts present?**		Yes ▶ No ▶	Repair circuit GC 57. Restore vehicle. Retest system. Go to **29-3.**
29-3	CHECK CIRCUIT GC 20 FOR VOLTAGE		
• Disconnect retractable quarter window extend limit switch connector E-123. • Using DVOM set to DC volt, connect negative lead to a known good ground. • Connect the positive lead to pin C at retractable quarter window extend limit switch connector E-123. • Turn ignition to ON position. • Read voltmeter. • **Is 2.1 volts present?**		Yes ▶ No ▶	Go to **29-4.** Repair circuit GC 20. Restore vehicle. Retest system.
29-4	CHECK CIRCUIT GC 22 FOR VOLTAGE		
• Connector E-123 at retractable quarter window extend limit switch disconnected. • Using DVOM set to DC volt, connect negative lead to a known good ground. • Connect positive lead to pin A at retractable quarter window extend limit switch connector E-123. • Turn ignition to ON position. • Read voltmeter. • **Is 0.7 volts present?**		Yes ▶ No ▶	Replace retractable quarter window extend switch. Restore vehicle. Retest system. Repair circuit GC 22. Restore vehicle. Retest system.

PINPOINT TESTS

REFER TO: PAGES 42-15 THROUGH 42-17 FOR PRECAUTIONS BEFORE SERVICE, NOTES AND DEFINITIONS OF TERMS.
PAGES 42-33 THROUGH 42-40 FOR SYMPTOM CHARTS.
PAGES 42-41 THROUGH 42-46 FOR TROUBLESHOOTING HINTS.

DTC 30

TEST STEP		RESULT ▶	ACTION TO TAKE
30-1	CHECK RETRACTABLE QUARTER WINDOW OPERATION		
• Turn ignition to ON position. • Press hardtop control switch to OPEN position. • Observe retractable quarter window operation. NOTE: Quarter windows and/or quarter window switches must be in a position that will allow the quarter windows to operate to the open position, if the quarter windows are already retracted, the ECU will not try to retract them again. • **Did retractable quarter windows retract properly?**		Yes ▶ No ▶	Go to **30-2.** Go to **30-5.**
30-2	CHECK CIRCUIT GC 56 FOR HIGH REFERENCE VOLTAGE AT ECU		
• Access connector F-124 at ECU. • Using Digital Volt/Ohm Meter (DVOM) set to DC volt, connect negative lead to known good ground. • Back probe and connect positive lead to pin 27 at ECU connector F-124. • Turn ignition to ON position. • Read voltmeter. • **Is 2.1 volt present?**		Yes ▶ No ▶	Replace ECU. Restore vehicle. Retest system. Go to **30-3.**
30-3	CHECK CIRCUIT GC 56 FOR LOW REFERENCE VOLTAGE AT ECU		
• Access connector F-124 at ECU. • Using Digital Volt/Ohm Meter (DVOM) set to DC volt, connect negative lead to known good ground. • Back probe and connect positive lead to pin 27 at ECU connector F-124. • Turn ignition to ON position. • Read voltmeter. • **Is 0.7 volts present?**		Yes ▶ No ▶	Go to **30-4.** Refer to other DTCs that may have occurred.
30-4	CHECK RETRACTABLE WINDOW RETRACT LIMIT SWITCH ADJUSTMENT		
• Access retractable window retract limit switch. • Check retractable window retract limit switch adjustment. • **Is retractable window retract limit switch adjusted properly?**		Yes ▶ No ▶	Replace retractable window retract limit switch. Restore vehicle. Retest system. Adjust retractable window retract limit switch as necessary. Restore vehicle. Retest system.

PINPOINT TESTS

REFER TO: PAGES 42-15 THROUGH 42-17 FOR PRECAUTIONS BEFORE SERVICE, NOTES AND DEFINITIONS OF TERMS.
PAGES 42-33 THROUGH 42-40 FOR SYMPTOM CHARTS.
PAGES 42-41 THROUGH 42-46 FOR TROUBLESHOOTING HINTS.

DTC 30 (CONTINUED)

TEST STEP	RESULT ▶	ACTION TO TAKE
30-5 CHECK CIRCUIT GC 37 FOR VOLTAGE AT ECU		
NOTE: A 12 volt test light will be needed for this test. The test light is used ONLY for testing of the motor circuits. DO NOT attempt to test other circuits with a test. • Access connector F-123 at ECU. • Using 12 volt test light connect one lead to known good ground. • Connect second lead to pin 12 at ECU connector F-123. • Turn ignition to ON position. NOTE: Quarter windows and/or quarter window switches must be in a position that will allow the quarter windows to operate to the open position, if the quarter windows are already retracted, the ECU will not try to retract them again. It may be necessary to cycle the hardtop in order to observe the test light. • Press hardtop control switch to OPEN position. • Read voltmeter. • **Is system voltage present?**	Yes ▶ No ▶	Go to **30-6**. Replace ECU. Restore vehicle. Retest system.
30-6 CHECK CIRCUIT GC 36 FOR VOLTAGE AT ECU		
• Access connector F-123 at ECU. • Using a Digital Volt/Ohm Meter (DVOM) set to DC volt, connect negative lead to known good ground. • Connect positive lead to pin 11 at ECU connector F-123. • Turn ignition to ON position. NOTE: Quarter windows and/or quarter window switches must be in a position that will allow the quarter windows to operate to the extend position, if the quarter windows are already extended, the ECU will not try to extend them again. It may be necessary to cycle the hardtop in order to observe the test light. NOTE: Hard tonneau must latch before the quarter windows will extend. • Press hardtop control switch to CLOSE position. • Read voltmeter. • **Is system voltage present?**	Yes ▶ No ▶	Go to **30-7**. Replace ECU. Restore vehicle. Retest system.

PINPOINT TESTS

REFER TO: PAGES 42-15 THROUGH 42-17 FOR PRECAUTIONS BEFORE SERVICE, NOTES AND DEFINITIONS OF TERMS.
PAGES 42-33 THROUGH 42-40 FOR SYMPTOM CHARTS.
PAGES 42-41 THROUGH 42-46 FOR TROUBLESHOOTING HINTS.

DTC 30 (CONTINUED)

TEST STEP		RESULT ▶	ACTION TO TAKE
30-7	CHECK VOLTAGE AT RETRACTABLE QUARTER WINDOW MOTOR		
• Access and disconnect retractable quarter window motor connector E-124. • Using DVOM set to DC volt, connect negative lead to pin A at retractable quarter window motor connector E-124. • Connect positive lead to pin B at retractable quarter window motor connector E-124. • Turn ignition to ON position. NOTE: Quarter windows and/or quarter window switches must be in a position that will allow the quarter windows to operate to the open position, if the quarter windows are already retracted, the ECU will not try to retract them again. It may be necessary to cycle the hardtop in order to observe the test light. • Press hardtop control switch to OPEN position. • Read voltmeter. • **Is system voltage present?**		Yes ▶ No ▶	Replace retractable quarter window motor. Restore vehicle. Retest system. Go to **30-8.**
30-8	CHECK CIRCUITS GC 36 AND GC 37		
• Connector E-124 at retractable quarter window motor disconnected. • Using DVOM set to DC volt, connect negative lead to a known good ground. • Connect positive lead to pin B at retractable quarter window connector E-124. • Turn ignition to ON position. NOTE: Quarter windows and/or quarter window switches must be in a position that will allow the quarter windows to operate to the open position, if the quarter windows are already retracted, the ECU will not try to retract them again. It may be necessary to cycle the hardtop in order to observe the test light. • Press hardtop control switch to OPEN position. • Read voltmeter. • **Is system voltage present?**		Yes ▶ No ▶	Repair circuit GC 36. Restore vehicle. Retest system. Repair circuit GC 37. Restore vehicle. Retest system.

PINPOINT TESTS

REFER TO: PAGES 42-15 THROUGH 42-17 FOR PRECAUTIONS BEFORE SERVICE, NOTES AND DEFINITIONS OF TERMS.
PAGES 42-33 THROUGH 42-40 FOR SYMPTOM CHARTS.
PAGES 42-41 THROUGH 42-46 FOR TROUBLESHOOTING HINTS.

DTC 31

TEST STEP	RESULT ▶	ACTION TO TAKE
31-1 CHECK CIRCUIT GC 56 FOR SHORT TO GROUND		
• Access and disconnect connector F-124 at ECU. • Using Digital Volt/Ohm Meter (DVOM) set to ohm scale, connect negative lead to a known good ground. • Connect the positive lead to pin 27 at ECU connector F-124. • Read ohmmeter. • **Is there continuity?**	Yes ▶ No ▶	Go to **31-2.** Replace ECU. Restore vehicle. Retest system.
31-2 CHECK CIRCUIT GC 20 FOR VOLTAGE		
• Connect connector F-124 at ECU. • Access and disconnect retractable quarter window retract limit switch connector E-119. • Using DVOM set to DC volt, connect negative lead to a known good ground. • Connect positive lead to pin C at retractable quarter window retract limit switch connector E-119. • Turn ignition to ON position. • Read voltmeter. • **Is 2.1 volts present?**	Yes ▶ No ▶	Go to **31-3.** Repair circuit GC 20 for open. Repair circuit GC 56 for short to ground. Restore vehicle. Retest system.
31-3 CHECK CIRCUIT GC 22 FOR VOLTAGE		
• Connector E-119 at retractable quarter window retract limit switch disconnected. • Using DVOM set to DC volt, connect negative lead to a known good ground. • Connect the positive lead to pin A at retractable quarter window retract limit switch connector E-119. • Read voltmeter. • **Is 0.7 volt present?**	Yes ▶ No ▶	Go to **31-4.** Repair circuit GC 22 for open. Repair circuit GC 56 for short to ground. Restore vehicle. Retest system.
31-4 CHECK RETRACTABLE QUARTER WINDOW RETRACT LIMIT SWITCH		
• Connector E-119 at retractable quarter window retract limit switch disconnected. • Using DVOM set on ohm scale, connect one lead to pin A of retractable quarter window retract limit switch. • Connect the second lead to pin B of retractable quarter window retract limit switch. • Check for continuity. • Connect one lead to pin B of retractable quarter window retract limit switch. • Connect second lead to pin C of retractable quarter window retract limit switch. • Check for open. • **Does switch operate properly?**	Yes ▶ No ▶	Repair circuit GC 56 for open and short to ground. Restore vehicle. Retest system. Replace retractable quarter window retract limit switch. Repair circuit GC 56 for short to ground. Restore vehicle. Retest system.

PINPOINT TESTS

REFER TO: PAGES 42-15 THROUGH 42-17 FOR PRECAUTIONS BEFORE SERVICE, NOTES AND DEFINITIONS OF TERMS.
PAGES 42-33 THROUGH 42-40 FOR SYMPTOM CHARTS.
PAGES 42-41 THROUGH 42-46 FOR TROUBLESHOOTING HINTS.

DTC 32

TEST STEP		RESULT ▶	ACTION TO TAKE
32-1	CHECK CIRCUIT GC 56 AT ECU FOR VOLTAGE		
• Access connector F-124 at ECU. • Using a Digital Volt/Ohm Meter (DVOM) set to DC volt, connect negative lead to a known good ground. • Back probe and connect the positive lead to pin 27 at ECU connector F-124. • Turn ignition to ON position. • Turn on all accessories and lights and operate hardtop system. • Read voltmeter. • **Is there 3.0 volts or more?**		Yes ▶ No ▶	Go to **32-2.** Replace ECU. Restore vehicle. Retest system.
32-2	CHECK CIRCUIT GC 20 AT RETRACTABLE QUARTER WINDOW RETRACT LIMIT SWITCH FOR VOLTAGE		
• Access and disconnect retractable quarter window retract limit switch E-119. • Using DVOM set to DC volt, connect negative lead to a known good ground. • Connect positive lead to pin C at retractable quarter window retract limit switch connector E-119. • Turn ignition to ON position. • Turn on all accessories and lights and operate hardtop system. • Read voltmeter. • **Is voltage over 2.1 volts?**		Yes ▶ No ▶	Repair circuit GC 20. Restore vehicle. Retest system. Go to **32-3.**
32-3	CHECK CIRCUIT GC 22 AT RETRACTABLE QUARTER WINDOW RETRACT LIMIT SWITCH FOR VOLTAGE		
• Connector E-119 at RH retractable quarter window limit switch disconnected. • Using DVOM set to DC volt, connect negative lead to a known good ground. • Connect positive lead to pin A at retractable quarter window retract limit switch connector E-119. • Turn ignition to ON position. • Turn on all accessories and lights and operate hardtop system. • Read voltmeter. • **Is voltage over 0.7 volts?**		Yes ▶ No ▶	Repair circuit GC 22. Restore vehicle. Retest system. Repair circuit GC 56. Restore vehicle. Retest system.

PINPOINT TESTS

REFER TO: PAGES 42-15 THROUGH 42-17 FOR PRECAUTIONS BEFORE SERVICE, NOTES AND DEFINITIONS OF TERMS.
PAGES 42-33 THROUGH 42-40 FOR SYMPTOM CHARTS.
PAGES 42-41 THROUGH 42-46 FOR TROUBLESHOOTING HINTS.

DTC 33

TEST STEP		RESULT ▶	ACTION TO TAKE
33-1	CHECK CIRCUIT GC 56 FOR VOLTAGE AT ECU		
• Access connector F-124 at ECU. • Using a Digital Volt/Ohm Meter (DVOM) set to DC volt, connect negative lead to known good ground. • Back probe and connect the positive lead to pin 27 at ECU connector F-124. • Turn ignition to ON position. • Read voltmeter. • **Is 0.7 or 2.1 volts present?**		Yes ▶ No ▶	Replace ECU. Restore vehicle. Retest system. Go to **33-2.**
33-2	CHECK CIRCUIT GC 56 FOR VOLTAGE AT RETRACTABLE QUARTER WINDOW RETRACT LIMIT SWITCH		
• Access retractable quarter window retract limit switch connector E-119. • Using DVOM set to DC volt, connect negative lead to a known good ground. • Back probe and connect positive lead to pin B at retractable quarter window retract limit switch connector E-119. • Turn ignition to ON position. • Read voltmeter. • **Is 0.7 or 2.1 volts present?**		Yes ▶ No ▶	Repair circuit GC 56. Restore vehicle. Retest system. Go to **33-3.**
33-3	CHECK CIRCUIT GC 20 FOR VOLTAGE		
• Disconnect retractable quarter window retract limit switch connector E-119. • Using DVOM set to DC volt, connect negative lead to a known good ground. • Connect the positive lead to pin C at retractable quarter window retract limit switch connector E-119. • Turn ignition to ON position. • Read voltmeter. • **Is 2.1 volts present?**		Yes ▶ No ▶	Go to **33-4.** Repair circuit GC 20. Restore vehicle. Retest system.
33-4	CHECK CIRCUIT GC 22 FOR VOLTAGE		
• Connector E-119 at retractable quarter window retract limit switch disconnected. • Using DVOM set to DC volt, connect negative lead to a known good ground. • Connect positive lead to pin A at retractable quarter window retract limit switch connector E-119. • Turn ignition to ON position. • Read voltmeter. • **Is 0.7 volts present?**		Yes ▶ No ▶	Replace retractable quarter window retract limit switch. Restore vehicle. Retest system. Repair circuit GC 22. Restore vehicle. Retest system.

PINPOINT TESTS

REFER TO: PAGES 42-15 THROUGH 42-17 FOR PRECAUTIONS BEFORE SERVICE, NOTES AND DEFINITIONS OF TERMS.
PAGES 42-33 THROUGH 42-40 FOR SYMPTOM CHARTS.
PAGES 42-41 THROUGH 42-46 FOR TROUBLESHOOTING HINTS.

DTC 34

TEST STEP		RESULT ▶	ACTION TO TAKE
34-1	CHECK CIRCUIT GC 44 FOR LOW REFERENCE VOLTAGE AT ECU		
• Access connector F-124 at ECU. • Using Digital Volt/Ohm Meter (DVOM) set to DC volt, connect negative lead to known good ground. • Back probe and connect positive lead to pin 25 at ECU connector F-124. • Turn ignition to ON position. • Read voltmeter. • **Is 0.7 volt present?**		Yes ▶ No ▶	Replace ECU. Restore vehicle. Retest system. Go to **34-2**.
34-2	CHECK CIRCUIT GC 44 FOR HIGH REFERENCE VOLTAGE AT ECU		
• Access connector F-124 at ECU. • Using Digital Volt/Ohm Meter (DVOM) set to DC volt, connect negative lead to known good ground. • Back probe and connect positive lead to pin 25 at ECU connector F-124. • Turn ignition to ON position. • Read voltmeter. • **Are 2.1 volts present?**		Yes ▶ No ▶	Replace LH header position switch. Restore vehicle. Retest system. Refer to other DTCs that may have occurred.

PINPOINT TESTS

REFER TO: PAGES 42-15 THROUGH 42-17 FOR PRECAUTIONS BEFORE SERVICE, NOTES AND DEFINITIONS OF TERMS.
PAGES 42-33 THROUGH 42-40 FOR SYMPTOM CHARTS.
PAGES 42-41 THROUGH 42-46 FOR TROUBLESHOOTING HINTS.

DTC 35

TEST STEP	RESULT ▶	ACTION TO TAKE
35-1 CHECK CIRCUIT GC 44 FOR SHORT TO GROUND		
• Disconnect connector F-124 at ECU. • Using Digital Volt/Ohm Meter (DVOM) set to ohm scale, connect negative lead to a known good ground. • Connect the positive lead to pin 25 at ECU connector F-124. • Read ohmmeter. • **Is there continuity?**	Yes ▶ No ▶	Go to **35-2**. Replace ECU. Restore vehicle. Retest system.
35-2 CHECK CIRCUIT GC 20 FOR VOLTAGE		
• Connect connector F-124 at ECU. • Access and disconnect LH header position limit switch connector E-114. • Using DVOM set to DC volt, connect negative lead to a known good ground. • Connect positive lead to pin C at LH header position limit switch connector E-114. • Turn ignition to ON position. • Read voltmeter. • **Is 2.1 present?**	Yes ▶ No ▶	Go to **35-3**. Repair circuit GC 20 for open. Repair circuit GC 44 for short to ground. Restore vehicle. Retest system.
35-3 CHECK CIRCUIT GC 22 FOR VOLTAGE		
• Connector E-114 at LH header position limit switch disconnected. • Using DVOM set to DC volt, connect negative lead to a known good ground. • Connect the positive lead to pin A at LH header position limit switch connector E-114. • Read voltmeter. • **Is 0.7 volt present?**	Yes ▶ No ▶	Go to **35-4**. Repair circuit GC 22 for open. Repair circuit GC 44 for short to ground. Restore vehicle. Retest system.
35-4 CHECK LH HEADER POSITION LIMIT SWITCH		
• Connector E-114 at LH header latch position limit switch disconnected. • Using DVOM set on ohm scale, connect one lead to pin A of LH header position limit switch. • Connect the second lead to pin B of LH header position limit switch. • Check for continuity. • Connect one lead to pin B of LH header position limit switch. • Connect second lead to pin C of LH header position limit switch. • Check for continuity. • Switch pressed = continuity A and B. • Switch open = continuity B and C. • **Does switch operate properly?**	Yes ▶ No ▶	Repair circuit GC 44 for open and short to ground. Restore vehicle. Retest system. Replace LH header position limit switch. Repair circuit GC 44 for short to ground. Restore vehicle. Retest system.

PINPOINT TESTS

REFER TO: PAGES 42-15 THROUGH 42-17 FOR PRECAUTIONS BEFORE SERVICE, NOTES AND DEFINITIONS OF TERMS.
PAGES 42-33 THROUGH 42-40 FOR SYMPTOM CHARTS.
PAGES 42-41 THROUGH 42-46 FOR TROUBLESHOOTING HINTS.

DTC 36

TEST STEP	RESULT ▶	ACTION TO TAKE
36-1 CHECK CIRCUIT GC 44 AT ECU FOR VOLTAGE • Access connector F-124 at ECU. • Using Digital Volt/Ohm Meter (DVOM) set to DC volt, connect negative lead to a known good ground. • Back probe and connect the positive lead to pin 25 at ECU connector F-124. • Turn ignition to ON position. • Turn on all accessories and lights and operate hardtop system. • Read voltmeter. • **Is there 3.0 volts or more?**	Yes ▶ No ▶	Go to **36-2.** Replace ECU. Restore vehicle. Retest system.
36-2 CHECK CIRCUIT GC 22 AT LH HEADER LATCH POSITION SWITCH FOR VOLTAGE • Access and disconnect LH header latch position switch connector E-114. • Using DVOM set to DC volt, connect negative lead to a known good ground. • Connect positive lead to pin A at LH header latch position switch connector E-114. • Turn ignition to ON position. • Turn on all accessories and lights and operate hardtop system. • Read voltmeter. • **Is voltage over 0.7 volts?**	Yes ▶ No ▶	Repair circuit GC 22. Restore vehicle. Retest system. Go to **36-3.**
36-3 CHECK CIRCUIT GC 20 AT LH HEADER LATCH POSITION SWITCH FOR VOLTAGE • Connector E-114 at LH header latch position switch disconnected. • Using DVOM set to DC volt, connect negative lead to a known good ground. • Connect positive lead to pin C at LH header latch position switch connector E-114. • Turn ignition to ON position. • Turn on all accessories and lights and operate hardtop system. • Read voltmeter. • **Is voltage over 2.1 volts?**	Yes ▶ No ▶	Repair circuit GC 20. Restore vehicle. Retest system. Repair circuit GC 44. Restore vehicle. Retest system.

PINPOINT TESTS

REFER TO: PAGES 42-15 THROUGH 42-17 FOR PRECAUTIONS BEFORE SERVICE, NOTES AND DEFINITIONS OF TERMS.
PAGES 42-33 THROUGH 42-40 FOR SYMPTOM CHARTS.
PAGES 42-41 THROUGH 42-46 FOR TROUBLESHOOTING HINTS.

DTC 37

TEST STEP	RESULT ▶	ACTION TO TAKE
37-1 CHECK CIRCUIT GC 44 FOR VOLTAGE AT ECU • Access connector F-124 at ECU. • Using Digital Volt/Ohm Meter (DVOM) set to DC volt, connect negative lead to known good ground. • Back probe and connect the positive lead to pin 25 at ECU connector F-124. • Turn ignition to ON position. • Read voltmeter. • **Is 0.7 or 2.1 volts present?**	Yes ▶ No ▶	Replace ECU. Restore vehicle. Retest system. Go to **37-2**.
37-2 CHECK CIRCUIT GC 44 FOR VOLTAGE AT LH HEADER LATCH POSITION SWITCH • Access LH header latch position switch connector E-114. • Using DVOM set to DC volt, connect negative lead to a known good ground. • Back probe and connect positive lead to pin B at LH header latch position switch connector E-114. • Turn ignition to ON position. • Read voltmeter. • **Is 0.7 or 2.1 volts present?**	Yes ▶ No ▶	Repair circuit GC 44. Restore vehicle. Retest system. Go to **37-3**.
37-3 CHECK CIRCUIT GC 20 FOR VOLTAGE • Disconnect LH header latch position switch connector E-114. • Using a DVOM set to DC volt, connect negative lead to a known good ground. • Connect the positive lead to pin C at LH header latch position switch connector E-114. • Turn ignition to ON position. • Read voltmeter. • **Is 2.1 volts present?**	Yes ▶ No ▶	Go to **37-4**. Repair circuit GC 20. Restore vehicle. Retest system.
37-4 CHECK CIRCUIT GC 22 FOR VOLTAGE • Connector E-114 at LH header latch position switch disconnected. • Using DVOM set to DC volt, connect negative lead to a known good ground. • Connect positive lead to pin A at LH header latch position switch E-114. • Turn ignition to ON position. • Read voltmeter. • **Is 0.7 volts present?**	Yes ▶ No ▶	Replace LH header latch position switch. Restore vehicle. Retest system. Repair circuit GC 22. Restore vehicle. Retest system.

PINPOINT TESTS

REFER TO: PAGES 42-15 THROUGH 42-17 FOR PRECAUTIONS BEFORE SERVICE, NOTES AND DEFINITIONS OF TERMS.
PAGES 42-33 THROUGH 42-40 FOR SYMPTOM CHARTS.
PAGES 42-41 THROUGH 42-46 FOR TROUBLESHOOTING HINTS.

DTC 38

TEST STEP		RESULT ▶	ACTION TO TAKE
38-1	CHECK CIRCUIT GC 45 FOR LOW REFERENCE VOLTAGE AT ECU		
• Access connector F-124 at ECU. • Using Digital Volt/Ohm Meter (DVOM) set to DC volt, connect negative lead to known good ground. • Back probe and connect positive lead to pin 39 at ECU connector F-124. • Turn ignition to ON position. • Read voltmeter. • **Is 0.7 volt present?**		Yes ▶ No ▶	Replace ECU. Restore vehicle. Retest system. Go to **38-2**.
38-2	CHECK CIRCUIT GC 45 FOR HIGH REFERENCE VOLTAGE AT ECU		
• Access connector F-124 at ECU. • Using DVOM set to DC volt, connect negative lead to known good ground. • Back probe and connect positive lead to pin 39 at ECU connector F-124. • Turn ignition to ON position. • Read voltmeter. • **Are 2.1 volts present?**		Yes ▶ No ▶	Replace RH header position switch. Restore vehicle. Retest system. Refer to other DTCs that may have occurred.

PINPOINT TESTS

REFER TO: PAGES 42-15 THROUGH 42-17 FOR PRECAUTIONS BEFORE SERVICE, NOTES AND DEFINITIONS OF TERMS.
PAGES 42-33 THROUGH 42-40 FOR SYMPTOM CHARTS.
PAGES 42-41 THROUGH 42-46 FOR TROUBLESHOOTING HINTS.

DTC 39

TEST STEP	RESULT ▶	ACTION TO TAKE
39-1 CHECK CIRCUIT GC 45 FOR SHORT TO GROUND		
• Disconnect connector F-124 at ECU. • Using Digital Volt/Ohm Meter (DVOM) set to ohm scale, connect one lead to a known good ground. • Connect the second lead to pin 39 at ECU connector F-124. • Read ohmmeter. • **Is there continuity?**	Yes ▶ No ▶	Go to **39-2**. Replace ECU. Restore vehicle. Retest system.
39-2 CHECK CIRCUIT GC 20 FOR VOLTAGE		
• Connect connector F-124 at ECU. • Access and disconnect RH header position limit switch connector E-111. • Using DVOM set to DC volt, connect one lead to a known good ground. • Connect second lead to pin C at RH header position limit switch connector E-111. • Turn ignition to ON position. • Read voltmeter. • **Is 2.1 volts present?**	Yes ▶ No ▶	Go to **39-3**. Repair circuit GC 20 for open. Repair circuit GC 45 for short to ground. Restore vehicle. Retest system.
39-3 CHECK CIRCUIT GC 22 FOR VOLTAGE		
• Connector E-111 at RH header position limit switch disconnected. • Using DVOM set to DC volt, connect one lead to a known good ground. • Connect the second lead to pin A at RH header position limit switch connector E-111. • Read voltmeter. • **Is 0.7 volt present?**	Yes ▶ No ▶	Go to **39-4**. Repair circuit GC 22 for open. Repair circuit GC 45 for short to ground. Restore vehicle. Retest system.
39-4 CHECK RH HEADER POSITION LIMIT SWITCH		
• Connector E-111 at RH header latch position limit switch disconnected. • Using DVOM set on ohm scale, connect one lead to pin A of RH header position limit switch. • Connect the second lead to pin B of RH header position limit switch. • Check for continuity. • Connect one lead to pin B of RH header position limit switch. • Connect second lead to pin C of RH header position limit switch. • Check for continuity. • Switch pressed = continuity A and B. • Switch open = continuity B and C. • **Does switch operate properly?**	Yes ▶ No ▶	Repair circuit GC 45 for open and short to ground. Restore vehicle. Retest system. Replace RH header position limit switch. Repair circuit GC 45 for short to ground. Restore vehicle. Retest system.

PINPOINT TESTS

REFER TO: PAGES 42-15 THROUGH 42-17 FOR PRECAUTIONS BEFORE SERVICE, NOTES AND DEFINITIONS OF TERMS.
PAGES 42-33 THROUGH 42-40 FOR SYMPTOM CHARTS.
PAGES 42-41 THROUGH 42-46 FOR TROUBLESHOOTING HINTS.

DTC 40

TEST STEP		RESULT ▶	ACTION TO TAKE
40-1	CHECK CIRCUIT GC 45 AT ECU FOR VOLTAGE		
• Access connector F-124 at ECU. • Using Digital Volt/Ohm Meter (DVOM) set to DC volt, connect negative lead to a known good ground. • Back probe and connect the positive lead to pin 39 at ECU connector F-124. • Turn ignition to ON position. • Turn on all accessories and lights and operate hardtop system. • Read voltmeter. • **Is there 3.0 volts or more?**		Yes ▶ No ▶	Go to **40-2.** Replace ECU. Restore vehicle. Retest system.
40-2	CHECK CIRCUIT GC 20 AT RH HEADER LATCH POSITION SWITCH FOR VOLTAGE		
• Access and disconnect RH header latch position switch connector E-111. • Using DVOM set to DC volt, connect negative lead to a known good ground. • Connect positive lead to pin C at RH header latch position switch connector E-111. • Turn ignition to ON position. • Turn on all accessories and lights and operate hardtop system. • Read voltmeter. • **Is voltage over 2.1 volts?**		Yes ▶ No ▶	Repair circuit GC 20. Restore vehicle. Retest system. Go to **40-3.**
40-3	CHECK CIRCUIT GC 22 AT RH HEADER LATCH POSITION SWITCH FOR VOLTAGE		
• Connector E-111 at RH header latch position switch disconnected. • Using DVOM set to DC volt, connect negative lead to a known good ground. • Connect positive lead to pin A at RH header latch position switch connector E-111. • Turn ignition to ON position. • Turn on all accessories and lights and operate hardtop system. • Read voltmeter. • **Is voltage over 0.7 volts?**		Yes ▶ No ▶	Repair circuit GC 22. Restore vehicle. Retest system. Repair circuit GC 45. Restore vehicle. Retest system.

PINPOINT TESTS

REFER TO: PAGES 42-15 THROUGH 42-17 FOR PRECAUTIONS BEFORE SERVICE, NOTES AND DEFINITIONS OF TERMS.
PAGES 42-33 THROUGH 42-40 FOR SYMPTOM CHARTS.
PAGES 42-41 THROUGH 42-46 FOR TROUBLESHOOTING HINTS.

DTC 41

TEST STEP	RESULT ▶	ACTION TO TAKE
41-1 CHECK CIRCUIT GC 45 FOR VOLTAGE AT ECU		
• Access connector F-124 at ECU. • Using Digital Volt/Ohm Meter (DVOM) set to DC volt, connect negative lead to known good ground. • Back probe and connect the positive lead to pin 39 at ECU connector F-124. • Turn ignition to ON position. • Read voltmeter. • **Is 0.7 or 2.1 volts present?**	Yes ▶ No ▶	Replace ECU. Restore vehicle. Retest system. Go to **41-2.**
41-2 CHECK CIRCUIT GC 45 FOR VOLTAGE AT RH HEADER LATCH POSITION SWITCH		
• Access RH header latch position switch connector E-111. • Using DVOM set to DC volt, connect negative lead to a known good ground. • Back probe and connect positive lead to pin B at RH header latch position switch connector E-111. • Turn ignition to ON position. • Read voltmeter. • **Is 0.7 or 2.1 volts present?**	Yes ▶ No ▶	Repair circuit GC 45. Restore vehicle. Retest system. Go to **41-3.**
41-3 CHECK CIRCUIT GC 20 FOR VOLTAGE		
• Disconnect RH header latch position switch connector E-111. • Using DVOM set to DC volt, connect negative lead to a known good ground. • Connect the positive lead to pin C at RH header latch position switch connector E-111. • Turn ignition to ON position. • Read voltmeter. • **Is 2.1 volts present?**	Yes ▶ No ▶	Go to **41-4.** Repair circuit GC 20. Restore vehicle. Retest system.
41-4 CHECK CIRCUIT GC 22 FOR VOLTAGE		
• Connector E-111 at RH header latch position switch disconnected. • Using DVOM set to DC volt, connect negative lead to a known good ground. • Connect positive lead to pin A at RH header latch position switch connector E-111. • Turn ignition to ON position. • Read voltmeter. • **Is 0.7 volts present?**	Yes ▶ No ▶	Replace RH header latch position switch. Restore vehicle. Retest system. Repair circuit GC 22. Restore vehicle. Retest system.

PINPOINT TESTS

REFER TO: PAGES 42-15 THROUGH 42-17 FOR PRECAUTIONS BEFORE SERVICE, NOTES AND DEFINITIONS OF TERMS.
PAGES 42-33 THROUGH 42-40 FOR SYMPTOM CHARTS.
PAGES 42-41 THROUGH 42-46 FOR TROUBLESHOOTING HINTS.

DTC 42

TEST STEP		RESULT ▶	ACTION TO TAKE
42-1	CHECK CIRCUIT GC 20 FOR VOLTAGE AT LH TONNEAU LATCH LIMIT SWITCH		
• Access LH tonneau latch limit switch. • Using Digital Volt/Ohm Meter (DVOM) set on DC volt, connect negative lead to a known good ground. • Back probe and connect the positive lead to pin C at LH tonneau limit switch connector F-119. • Turn ignition to ON position. NOTE: Tonneau latch switch must be open. • Read voltmeter. • **Is 2.1 volts present?**		Yes ▶ No ▶	Go to **42-2.** Repair circuit GC 20. Restore vehicle. Retest system.
42-2	CHECK CIRCUIT GC 22 FOR VOLTAGE AT LH TONNEAU LATCH LIMIT SWITCH		
• Access LH tonneau latch limit switch. • Using Digital Volt/Ohm Meter (DVOM) set on DC volt, connect negative lead to a known good ground. • Back probe and connect the positive lead to pin A at LH tonneau limit switch connector F-119. • Turn ignition to ON position. • Read voltmeter. • **Is 0.7 volts present?**		Yes ▶ No ▶	Go to **42-3.** Repair circuit GC 22. Restore vehicle. Retest system.
42-3	CHECK CIRCUIT GC 24 FOR VOLTAGE AT LH TONNEAU LATCH LIMIT SWITCH		
• Access LH tonneau latch limit switch connector F-119. • Using DVOM set on DC volt, connect negative lead to a known good ground. • Back probe and connect the positive lead to pin B at LH tonneau limit switch connector F-119. • Turn ignition to ON position. NOTE: 2.1 volts with switch open. 0.7 volts with switch closed. • Read voltmeter. • **Is proper voltage present?**		Yes ▶ No ▶	Go to **42-4.** Replace LH tonneau latch limit switch. Restore vehicle. Retest system.
42-4	CHECK CIRCUIT GC 24 AT ECU		
• Access connector F-124 at ECU. • Using DVOM set on DC volt, connect negative lead to a known good ground. • Back probe and connect the positive lead to pin 26 at ECU connector F-124. • Turn ignition to ON position. • Read voltmeter. NOTE: 2.1 volts with switch open. 0.7 volts with switch closed. • **Is proper voltage present?**		Yes ▶ No ▶	Replace ECU. Restore vehicle. Retest system. Repair circuit GC 24. Restore vehicle. Retest system.

PINPOINT TESTS

REFER TO: PAGES 42-15 THROUGH 42-17 FOR PRECAUTIONS BEFORE SERVICE, NOTES AND DEFINITIONS OF TERMS.
PAGES 42-33 THROUGH 42-40 FOR SYMPTOM CHARTS.
PAGES 42-41 THROUGH 42-46 FOR TROUBLESHOOTING HINTS.

DTC 43

TEST STEP	RESULT ▶	ACTION TO TAKE
43-1 CHECK CIRCUIT GC 24 FOR SHORT TO GROUND		
• Disconnect connector F-124 at ECU. • Using Digital Volt/Ohm Meter (DVOM) set to ohm scale, connect negative lead to a known good ground. • Connect the positive lead to pin 26 at ECU connector F-124. • Read ohmmeter. • **Is there continuity?**	Yes ▶ No ▶	Go to **43-2**. Replace ECU. Restore vehicle. Retest system.
43-2 CHECK CIRCUIT GC 20 FOR VOLTAGE		
• Connect connector F-124 at ECU. • Access and disconnect LH tonneau latch limit switch connector E-119. • Using DVOM set to DC volt, connect negative lead to a known good ground. • Connect positive lead to pin C at LH tonneau latch limit switch connector F-119. • Turn ignition to ON position. • Read voltmeter. • **Is 2.1 volts present?**	Yes ▶ No ▶	Go to **43-3**. Repair circuit GC 20 for open. Repair circuit GC 24 for short to ground. Restore vehicle. Retest system.
43-3 CHECK CIRCUIT GC 22 FOR VOLTAGE		
• Connector F-119 at LH tonneau latch limit switch disconnected. • Using DVOM set to DC volt, connect negative lead to a known good ground. • Connect the positive lead to pin A at LH tonneau latch limit switch connector F-119. • Read voltmeter. • **Is 0.7 volt present?**	Yes ▶ No ▶	Go to **43-4**. Repair circuit GC 22 for open. Repair circuit GC 24 for short to ground. Restore vehicle. Retest system.
43-4 CHECK LH TONNEAU LATCH LIMIT SWITCH		
• Connector F-119 at LH tonneau latch limit switch disconnected. • Using DVOM set on ohm scale, connect one lead to pin A of LH tonneau latch limit switch. • Connect the second lead to pin B of LH tonneau latch limit switch. • Check for continuity. • Connect one lead to pin B of LH tonneau latch limit switch. • Connect second lead to pin C of LH tonneau latch limit switch. • Check for continuity. • Switch pressed = continuity A and B. • Switch open = continuity B and C. • **Does switch operate properly?**	Yes ▶ No ▶	Repair circuit GC 24 for open and short to ground. Restore vehicle. Retest system. Replace LH tonneau latch limit switch. Repair circuit GC 24 for short to ground. Restore vehicle. Retest system.

PINPOINT TESTS

REFER TO: PAGES 42-15 THROUGH 42-17 FOR PRECAUTIONS BEFORE SERVICE, NOTES AND DEFINITIONS OF TERMS.
PAGES 42-33 THROUGH 42-40 FOR SYMPTOM CHARTS.
PAGES 42-41 THROUGH 42-46 FOR TROUBLESHOOTING HINTS.

DTC 44

TEST STEP	RESULT ▶	ACTION TO TAKE
44-1 CHECK CIRCUIT GC 24 AT ECU FOR VOLTAGE • Access connector F-124 at ECU. • Using Digital Volt/Ohm Meter (DVOM) set to DC volt, connect negative lead to a known good ground. • Back probe and connect the positive lead to pin 26 at ECU connector F-124. • Turn ignition to ON position. • Turn on all accessories and lights and operate hardtop system. • Read voltmeter. • **Is there 3.0 volts or more?**	Yes ▶ No ▶	Go to **44-2.** Replace ECU. Restore vehicle. Retest system.
44-2 CHECK CIRCUIT GC 20 AT LH TONNEAU LATCH LIMIT SWITCH FOR VOLTAGE • Access and disconnect LH tonneau latch limit switch connector F-119. • Using DVOM set to DC volt, connect negative lead to a known good ground. • Connect positive lead to pin C at LH tonneau latch limit switch connector F-119. • Turn ignition to ON position. • Turn on all accessories and lights and operate hardtop system. • Read voltmeter. • **Is voltage over 2.1 volts?**	Yes ▶ No ▶	Repair circuit GC 20. Restore vehicle. Retest system. Go to **44-3.**
44-3 CHECK CIRCUIT GC 22 AT LH TONNEAU LATCH LIMIT SWITCH FOR VOLTAGE • Connector F-119 at LH tonneau latch limit switch disconnected. • Using DVOM set to DC volt, connect negative lead to a known good ground. • Connect positive lead to pin A at LH tonneau latch limit switch harness connector F-119. • Turn ignition to ON position. • Turn on all accessories and lights and operate hardtop system. • Read voltmeter. • **Is voltage over 0.7 volts?**	Yes ▶ No ▶	Repair circuit GC 22. Restore vehicle. Retest system. Repair circuit GC 23. Restore vehicle. Retest system.

PINPOINT TESTS

REFER TO: PAGES 42-15 THROUGH 42-17 FOR PRECAUTIONS BEFORE SERVICE, NOTES AND DEFINITIONS OF TERMS.
PAGES 42-33 THROUGH 42-40 FOR SYMPTOM CHARTS.
PAGES 42-41 THROUGH 42-46 FOR TROUBLESHOOTING HINTS.

DTC 45

TEST STEP	RESULT ▶	ACTION TO TAKE
45-1 CHECK CIRCUIT GC 24 FOR VOLTAGE AT ECU		
• Access connector F-124 at ECU. • Using Digital Volt/Ohm Meter (DVOM) set to DC volt, connect negative lead to known good ground. • Back probe and connect the positive lead to pin 26 at ECU connector F-124. • Turn ignition to ON position. • Read voltmeter. • **Is 0.7 or 2.1 volts present?**	Yes ▶ No ▶	Replace ECU. Restore vehicle. Retest system. Go to **45-2.**
45-2 CHECK CIRCUIT GC 24 FOR VOLTAGE AT LH TONNEAU LATCH LIMIT SWITCH		
• Access LH tonneau latch position switch connector F-119. • Using DVOM set to DC volt, connect negative lead to a known good ground. • Back probe and connect positive lead to pin B at LH tonneau latch limit switch connector F-119. • Turn ignition to ON position. • Read voltmeter. • **Is 0.7 or 2.1 volts present?**	Yes ▶ No ▶	Repair circuit GC 24. Restore vehicle. Retest system. Go to **45-3.**
45-3 CHECK CIRCUIT GC 20 FOR VOLTAGE		
• Disconnect LH tonneau latch position switch connector F-119. • Using DVOM set to DC volt, connect negative lead to a known good ground. • Connect the positive lead to pin C at LH tonneau latch limit switch connector F-119. • Turn ignition to ON position. • Read voltmeter. • **Is 2.1 volts present?**	Yes ▶ No ▶	Go to **45-4.** Repair circuit GC 20. Restore vehicle. Retest system.
45-4 CHECK CIRCUIT GC 22 FOR VOLTAGE		
• Connector F-119 at LH tonneau latch position switch disconnected. • Using DVOM set to DC volt, connect negative lead to a known good ground. • Connect positive lead to pin A at LH tonneau latch limit switch connector F-119. • Turn ignition to ON position. • Read voltmeter. • **Is 0.7 volts present?**	Yes ▶ No ▶	Replace LH tonneau latch limit switch. Restore vehicle. Retest system. Repair circuit GC 22. Restore vehicle. Retest system.

PINPOINT TESTS

REFER TO: PAGES 42-15 THROUGH 42-17 FOR PRECAUTIONS BEFORE SERVICE, NOTES AND DEFINITIONS OF TERMS.
PAGES 42-33 THROUGH 42-40 FOR SYMPTOM CHARTS.
PAGES 42-41 THROUGH 42-46 FOR TROUBLESHOOTING HINTS.

DTC 46

TEST STEP		RESULT ▶	ACTION TO TAKE
46-1	CHECK CIRCUIT GC 20 FOR VOLTAGE AT RH TONNEAU LATCH LIMIT SWITCH		
• Access RH tonneau latch limit switch. • Using Digital Volt/Ohm Meter (DVOM) set on DC volt, connect negative lead to a known good ground. • Back probe and connect the positive lead to pin C at RH tonneau limit switch connector F-111. • Turn ignition to ON position. NOTE: Tonneau latch switch must be open. • Read voltmeter. • **Is 2.1 volts present?**		Yes ▶ No ▶	Go to **46-2.** Repair circuit GC 20. Restore vehicle. Retest system.
46-2	CHECK CIRCUIT GC 22 FOR VOLTAGE AT RH TONNEAU LATCH LIMIT SWITCH		
• Access RH tonneau latch limit switch. • Using Digital Volt/Ohm Meter (DVOM) set on DC volt, connect negative lead to a known good ground. • Back probe and connect the positive lead to pin A at RH tonneau limit switch connector F-111. • Turn ignition to ON position. • Read voltmeter. • **Is 0.7 volts present?**		Yes ▶ No ▶	Go to **46-3.** Repair circuit GC 22. Restore vehicle. Retest system.
46-3	CHECK CIRCUIT GC 25 FOR VOLTAGE AT LH TONNEAU LATCH LIMIT SWITCH		
• Access LH tonneau latch limit switch connector F-111. • Using DVOM set on DC volt, connect negative lead to a known good ground. • Back probe and connect the positive lead to pin B at RH tonneau limit switch connector F-111. • Turn ignition to ON position. NOTE: 2.1 volts with switch open. 0.7 volts with switch closed. • Read voltmeter. • **Is proper voltage present?**		Yes ▶ No ▶	Go to **46-4.** Replace RH tonneau latch limit switch. Restore vehicle. Retest system.
46-4	CHECK CIRCUIT GC 25 AT ECU		
• Access connector F-124 at ECU. • Using DVOM set on DC volt, connect negative lead to a known good ground. • Back probe and connect the positive lead to pin 40 at ECU connector F-124. • Turn ignition to ON position. • Read voltmeter. NOTE: 2.1 volts with switch open. 0.7 volts with switch closed. • **Is proper voltage present?**		Yes ▶ No ▶	Replace ECU. Restore vehicle. Retest system. Repair circuit GC 25. Restore vehicle. Retest system.

PINPOINT TESTS

REFER TO: PAGES 42-15 THROUGH 42-17 FOR PRECAUTIONS BEFORE SERVICE, NOTES AND DEFINITIONS OF TERMS.
PAGES 42-33 THROUGH 42-40 FOR SYMPTOM CHARTS.
PAGES 42-41 THROUGH 42-46 FOR TROUBLESHOOTING HINTS.

DTC 47

TEST STEP	RESULT ▶	ACTION TO TAKE
47-1 CHECK CIRCUIT GC 25 FOR SHORT TO GROUND		
• Disconnect connector F-124 at ECU. • Using Digital Volt/Ohm Meter (DVOM) set to ohm scale, connect negative lead to a known good ground. • Connect the positive lead to pin 40 at ECU connector F-124. • Read ohmmeter. • **Is there continuity?**	Yes ▶ No ▶	Go to **47-2.** Replace ECU. Restore vehicle. Retest system.
47-2 CHECK CIRCUIT GC 20 FOR VOLTAGE		
• Connect connector F-124 at ECU. • Access and disconnect RH tonneau latch limit switch connector F-111. • Using DVOM set to DC volt, connect negative lead to a known good ground. • Connect positive lead to pin C at RH tonneau latch limit switch connector F-111. • Turn ignition to ON position. • Read voltmeter. • **Is 2.1 volts present?**	Yes ▶ No ▶	Go to **47-3.** Repair circuit GC 20 for open. Repair circuit GC 25 for short to ground. Restore vehicle. Retest system.
47-3 CHECK CIRCUIT GC 22 FOR VOLTAGE		
• Connector F-111 at RH tonneau latch limit switch disconnected. • Using DVOM set to DC volt, connect negative lead to a known good ground. • Connect the positive lead to pin A at RH tonneau latch limit switch connector F-111. • Read voltmeter. • **Is 0.7 volt present?**	Yes ▶ No ▶	Go to **47-4.** Repair circuit GC 22 for open. Repair circuit GC 25 for short to ground. Restore vehicle. Retest system.
47-4 CHECK RH TONNEAU LATCH LIMIT SWITCH		
• Connector F-111 at RH tonneau latch limit switch disconnected. • Using DVOM set on ohm scale, connect one lead to pin A of RH tonneau latch limit switch. • Connect the second lead to pin B of RH tonneau latch limit switch. • Check for continuity. • Connect one lead to pin B of RH tonneau latch limit switch. • Connect second lead to pin C of RH tonneau latch limit switch. • Check for continuity. • Switch pressed = continuity A and B. • Switch open = continuity B and C. • **Does switch operate properly?**	Yes ▶ No ▶	Repair circuit GC 25 for open and short to ground. Restore vehicle. Retest system. Replace RH tonneau latch limit switch. Repair circuit GC 25 for short to ground. Restore vehicle. Retest system.

PINPOINT TESTS

REFER TO: PAGES 42-15 THROUGH 42-17 FOR PRECAUTIONS BEFORE SERVICE, NOTES AND DEFINITIONS OF TERMS.
PAGES 42-33 THROUGH 42-40 FOR SYMPTOM CHARTS.
PAGES 42-41 THROUGH 42-46 FOR TROUBLESHOOTING HINTS.

DTC 48

TEST STEP		RESULT ▶	ACTION TO TAKE
48-1	CHECK CIRCUIT GC 25 AT ECU FOR VOLTAGE		
• Access connector F-124 at ECU. • Using Digital Volt/Ohm Meter (DVOM) set to DC volt, connect negative lead to a known good ground. • Back probe and connect the positive lead to pin 40 at ECU connector F-124. • Turn ignition to ON position. • Turn on all accessories and lights and operate hardtop system. • Read voltmeter. • **Is there 3.0 volts or more?**		Yes ▶ No ▶	Go to **48-2.** Replace ECU. Restore vehicle. Retest system.
48-2	CHECK CIRCUIT GC 20 AT RH TONNEAU LATCH LIMIT SWITCH FOR VOLTAGE		
• Access and disconnect RH tonneau latch limit switch connector F-111. • Using DVOM set to DC volt, connect negative lead to a known good ground. • Connect positive lead to pin C at RH tonneau latch limit switch harness connector F-111. • Turn ignition to ON position. • Turn on all accessories and lights and operate hardtop system. • Read voltmeter. • **Is voltage over 2.1 volts?**		Yes ▶ No ▶	Repair circuit GC 20. Restore vehicle. Retest system. Go to **48-3.**
48-3	CHECK CIRCUIT GC 22 AT RH TONNEAU LATCH LIMIT SWITCH FOR VOLTAGE		
• Connector F-111 at RH tonneau latch limit switch disconnected. • Using DVOM set to DC volt, connect negative lead to a known good ground. • Connect positive lead to pin A at RH tonneau latch limit switch harness connector F-111. • Turn ignition to ON position. • Turn on all accessories and lights and operate hardtop system. • Read voltmeter. • **Is voltage over 0.7 volts?**		Yes ▶ No ▶	Repair circuit GC 22. Restore vehicle. Retest system. Repair circuit GC 25. Restore vehicle. Retest system.

PINPOINT TESTS

REFER TO: PAGES 42-15 THROUGH 42-17 FOR PRECAUTIONS BEFORE SERVICE, NOTES AND DEFINITIONS OF TERMS.
PAGES 42-33 THROUGH 42-40 FOR SYMPTOM CHARTS.
PAGES 42-41 THROUGH 42-46 FOR TROUBLESHOOTING HINTS.

DTC 49

TEST STEP	RESULT ▶	ACTION TO TAKE
49-1 CHECK CIRCUIT GC 25 FOR VOLTAGE AT ECU • Access connector F-124 at ECU. • Using Digital Volt/Ohm Meter (DVOM) set to DC volt, connect negative lead to known good ground. • Back probe and connect the positive lead to pin 40 at ECU connector F-124. • Turn ignition to ON position. • Read voltmeter. • **Is 0.7 or 2.1 volts present?**	Yes ▶ No ▶	Replace ECU. Restore vehicle. Retest system. Go to **49-2.**
49-2 CHECK CIRCUIT GC 25 FOR VOLTAGE AT RH TONNEAU LATCH LIMIT SWITCH • Access RH tonneau latch limit switch connector F-111. • Using DVOM set to DC volt, connect negative lead to a known good ground. • Back probe and connect positive lead to pin B at RH tonneau latch limit switch connector F-111. • Turn ignition to ON position. • Read voltmeter. • **Is 0.7 or 2.1 volts present?**	Yes ▶ No ▶	Repair circuit GC 25. Restore vehicle. Retest system. Go to **49-3.**
49-3 CHECK CIRCUIT GC 20 FOR VOLTAGE • Disconnect RH tonneau latch position switch, connector F-111. • Using DVOM set to DC volt, connect negative lead to a known good ground. • Connect the positive lead to pin C at RH tonneau latch limit switch connector F-111. • Turn ignition to ON position. • Read voltmeter. • **Is 2.1 volts present?**	Yes ▶ No ▶	Go to **49-4.** Repair circuit GC 20. Restore vehicle. Retest system.
49-4 CHECK CIRCUIT GC 22 FOR VOLTAGE • Connector F-111 at RH tonneau latch position switch disconnected. • Using DVOM set to DC volt, connect negative lead to a known good ground. • Connect positive lead to pin A at RH tonneau latch limit switch connector F-111. • Turn ignition to ON position. • Read voltmeter. • **Is 0.7 volts present?**	Yes ▶ No ▶	Replace RH tonneau latch limit switch. Restore vehicle. Retest system. Repair circuit GC 22. Restore vehicle. Retest system.

PINPOINT TESTS

REFER TO: PAGES 42-15 THROUGH 42-17 FOR PRECAUTIONS BEFORE SERVICE, NOTES AND DEFINITIONS OF TERMS.
PAGES 42-33 THROUGH 42-40 FOR SYMPTOM CHARTS.
PAGES 42-41 THROUGH 42-46 FOR TROUBLESHOOTING HINTS.

DTC 50

TEST STEP	RESULT ▶	ACTION TO TAKE
50-1 CHECK HARDTOP MANUAL OPERATION NOTE: A second person will be needed for this operation. • Open hard tonneau. • Access and turn hardtop bypass valve to MANUAL position. • Turn ignition to the ON position. • Press hardtop control switch to the OPEN position to release header latches. Release hardtop control switch. • Turn ignition to OFF position. • Manually operate hardtop to full open and full closed positions. • **Does hardtop operate without binding?**	Yes ▶ No ▶	Go to **50-2.** Check for binding of mechanical and/or hydraulic components. Service as required. Restore vehicle. Retest system.
50-2 CHECK HARDTOP PUMP OPERATION WHILE IN BYPASS • Clear DTCs from ECUs memory. • Hardtop bypass valve in MANUAL position. • Turn ignition to ON position. • Press hardtop control switch to OPEN position. • Check for DTCs. • **Did DTC 50 return?**	Yes ▶ No ▶	Go to **50-3.** Replace hardtop pump assembly. Restore vehicle. Retest system.
50-3 CHECK CIRCUIT GC 29 FOR SHORT TO GROUND • Disconnect connector F-125 at ECU. • Disconnect hardtop drive motor connector F-120. • Using Digital Volt/Ohm Meter (DVOM) set to ohm scale, connect negative lead to a known good ground. • Connect the positive lead to pin B at hardtop drive motor connector F-120. • Read ohmmeter. • **Is there continuity?**	Yes ▶ No ▶	Repair circuit GC 29. Restore vehicle. Retest system. Go to **50-4.**
50-4 CHECK CIRCUIT GC 30 FOR SHORT TO GROUND • Connector F-125 at ECU disconnected. • Connector F-120 at hardtop drive motor disconnected. • Using DVOM set to ohm scale, connect negative lead to a known good ground. • Connect the positive lead to pin A at hardtop drive motor connector F-120. • Read ohmmeter. • **Is there continuity?**	Yes ▶ No ▶	Repair circuit GC 30. Restore vehicle. Retest system. Go to **50-5.**

PINPOINT TESTS

REFER TO: PAGES 42-15 THROUGH 42-17 FOR PRECAUTIONS BEFORE SERVICE, NOTES AND DEFINITIONS OF TERMS.
PAGES 42-33 THROUGH 42-40 FOR SYMPTOM CHARTS.
PAGES 42-41 THROUGH 42-46 FOR TROUBLESHOOTING HINTS.

DTC 50 (CONTINUED)

TEST STEP		RESULT ▶	ACTION TO TAKE
50-5	CHECK CIRCUIT GC 29 AND GC 30 FOR SHORT CIRCUIT		
• Connector F-125 at ECU disconnected. • Connector F-120 at hardtop drive motor disconnected. • Using DVOM set to ohm scale, connect one lead to pin B at hardtop drive motor connector F-120. • Connect the second lead to pin A at hardtop drive motor connector F-120. • Read ohmmeter. • **Is there continuity?**		Yes ▶	Repair circuits GC 29 and GC 30. Restore vehicle. Retest system.
		No ▶	Replace hardtop drive motor. Restore vehicle. Retest system.

PINPOINT TESTS

REFER TO: PAGES 42-15 THROUGH 42-17 FOR PRECAUTIONS BEFORE SERVICE, NOTES AND DEFINITIONS OF TERMS.
PAGES 42-33 THROUGH 42-40 FOR SYMPTOM CHARTS.
PAGES 42-41 THROUGH 42-46 FOR TROUBLESHOOTING HINTS.

DTC 51

TEST STEP		RESULT ▶	ACTION TO TAKE
51-1	CHECK HARD TONNEAU MANUAL OPERATION		
• Release hard tonneau latches. • Access and turn hard tonneau bypass valve to MANUAL position. • Manually operate hard tonneau to full open and full closed positions. • **Does hard tonneau operate without binding?**		Yes ▶ No ▶	Go to **51-2**. Check for binding of mechanical and/or hydraulic components. Service as required. Restore vehicle. Retest system.
51-2	CHECK HARD TONNEAU PUMP OPERATION WHILE IN BYPASS		
• Clear DTCs from ECUs memory. • Hard tonneau bypass valve in MANUAL position. • Turn ignition to ON position. • Press hard tonneau control switch to OPEN position. • Check for DTCs. • **Did DTC 51 return?**		Yes ▶ No ▶	Go to **51-3**. Replace hard tonneau pump assembly. Restore vehicle. Retest system.
51-3	CHECK CIRCUIT GC 31 FOR SHORT TO GROUND		
• Disconnect connector F-125 at ECU. • Disconnect hard tonneau drive motor connector F-113. • Using Digital Volt/Ohm Meter (DVOM) set to ohm scale, connect negative lead to a known good ground. • Connect the positive lead to pin A at hard tonneau drive motor connector F-113. • Read ohmmeter. • **Is there continuity?**		Yes ▶ No ▶	Repair circuit GC 31. Restore vehicle. Retest system. Go to **51-4**.
51-4	CHECK CIRCUIT GC 32 FOR SHORT TO GROUND		
• Connector F-125 at ECU disconnected. • Connector F-113 at hard tonneau drive motor disconnected. • Using DVOM set to ohm scale, connect negative lead to a known good ground. • Connect the positive lead to pin B at hard tonneau pump connector F-113. • Read ohmmeter. • **Is there continuity?**		Yes ▶ No ▶	Repair circuit GC 32. Restore vehicle. Retest system. Go to **51-5**.
51-5	CHECK CIRCUIT GC 31 AND GC 32 FOR SHORT CIRCUIT		
• Connector F-125 at ECU disconnected. • Connector F-113 at hard tonneau pump disconnected. • Using DVOM set to ohm scale, connect one lead to pin A at hard tonneau pump connector F-113. • Connect the second lead to pin B at hard tonneau pump connector F-113. • Read ohmmeter. • **Is there continuity?**		Yes ▶ No ▶	Repair circuits GC 31 and GC 32. Restore vehicle. Retest system. Replace hard tonneau pump assembly. Restore vehicle. Retest system.

PINPOINT TESTS

REFER TO: PAGES 42-15 THROUGH 42-17 FOR PRECAUTIONS BEFORE SERVICE, NOTES AND DEFINITIONS OF TERMS.
PAGES 42-33 THROUGH 42-40 FOR SYMPTOM CHARTS.
PAGES 42-41 THROUGH 42-46 FOR TROUBLESHOOTING HINTS.

DTC 52

TEST STEP		RESULT ▶	ACTION TO TAKE
52-1	CHECK CIRCUIT GW 52 FOR VOLTAGE AT ECU		
• Access connector F-123 at ECU. • Using Digital Volt/Ohm Meter (DVOM) set to DC volt, back probe and connect negative lead to pin 19 at ECU connector F-123. • Back probe and connect positive lead to pin 18 at ECU connector F-123. • Turn ignition to ON position. • Press hardtop control switch to CLOSED position. NOTE: Tonneau and header must latch. • Read voltmeter. • **Is system voltage present?**		Yes ▶ No ▶	Go to **52-2.** Replace ECU. Restore vehicle. Retest system.
52-2	CHECK CIRCUIT GW 51 FOR VOLTAGE AT ECU		
• Access connector F-123 at ECU. • Using DVOM set to DC volt, back probe and connect negative lead to pin 18 at ECU connector F-123. • Back probe and connect positive lead to pin 19 at ECU connector F-123. • Turn ignition to ON position. • Press hardtop control switch to OPEN position. • Read voltmeter. • **Is system voltage present?**		Yes ▶ No ▶	Go to **52-3.** Replace ECU. Restore vehicle. Retest system.
52-3	CHECK CIRCUIT GW 51 AND 52 FOR VOLTAGE AT DRIVER DOOR RELAY		
• Access and disconnect driver window relay controller connector E-126. • Using DVOM set to DC volt, connect negative lead to pin 1 at driver window relay controller connector E-126. • Connect positive lead to pin 2 at driver window relay controller connector E-126. • Turn ignition to ON position. • Operate hardtop control switch to OPEN position. • Read voltmeter. NOTE: Quarter windows must be extended. • **Is system voltage present?**		Yes ▶ No ▶	Go to **52-6.** Go to **52-4.**
52-4	CHECK CIRCUIT GW 51 FOR OPEN		
• Disconnect connector F-123 at ECU. • Connector E-126 at driver window relay disconnected. • Using DVOM set to ohm scale, connect negative lead to pin 1 at window relay controller connector E-126. • Connect positive lead to pin 18 at ECU connector F-123. • Read ohmmeter. • **Is there 3 ohms or less?**		Yes ▶ No ▶	Go to **52-5.** Repair circuit GW 51. Restore vehicle. Retest system.

PINPOINT TESTS

REFER TO: PAGES 42-15 THROUGH 42-17 FOR PRECAUTIONS BEFORE SERVICE, NOTES AND DEFINITIONS OF TERMS.
PAGES 42-33 THROUGH 42-40 FOR SYMPTOM CHARTS.
PAGES 42-41 THROUGH 42-46 FOR TROUBLESHOOTING HINTS.

DTC 52 (CONTINUED)

TEST STEP	RESULT ▶	ACTION TO TAKE
52-5 CHECK CIRCUIT GW 52 FOR OPEN		
• Disconnect connector F-123 at ECU. • Connector E-126 at driver window relay disconnected. • Using DVOM set to ohm scale, connect negative lead to pin 2 at window relay controller connector E-126. • Connect positive lead to pin 19 at ECU connector F-123. • Read ohmmeter. • **Is there 3 ohms or less?**	Yes ▶ No ▶	Circuits check okay. Restore vehicle. Retest system. Repair circuit GW 52. Restore vehicle. Retest system.
52-6 CHECK VOLTAGE TO DRIVER WINDOW MOTOR		
• Connect driver relay controller connector E-126. • Disconnect driver window relay window motor connector E-125. • Using Digital Volt/Ohm Meter (DVOM) set to DC volt, connect negative lead to pin 2 at driver window relay window motor connector. • Connector positive lead to pin 1 at driver window relay window motor connector E-125. • Turn ignition to ON position. NOTE: Quarter windows must be extended. • Operate hardtop control switch to OPEN position. • Read voltmeter. • **Is system voltage present?**	Yes ▶ No ▶	Replace driver window motor. Restore vehicle. Retest system. Replace driver window relay assembly.

PINPOINT TESTS

REFER TO: PAGES 42-15 THROUGH 42-17 FOR PRECAUTIONS BEFORE SERVICE, NOTES AND DEFINITIONS OF TERMS.
PAGES 42-33 THROUGH 42-40 FOR SYMPTOM CHARTS.
PAGES 42-41 THROUGH 42-46 FOR TROUBLESHOOTING HINTS.

DTC 53

TEST STEP	RESULT ▶	ACTION TO TAKE
53-1 CHECK CIRCUIT GW 53 FOR VOLTAGE • Access connector F-123 at ECU. • Using Digital Volt/Ohm Meter (DVOM) set to DC volt, connect negative lead to a known good ground. • Back probe and connect positive lead to pin 13 at ECU connector F-123. • Turn ignition to ON position. NOTE: Quarter windows must be retracted. • Momentarily operate hardtop control switch to CLOSED position. • Read voltmeter. • **Is system voltage present?**	Yes ▶ No ▶	Go to **53-2.** Replace ECU. Restore vehicle. Retest system.
53-2 CHECK CIRCUIT GW 54 FOR VOLTAGE • Access connector F-123 at ECU. • Using DVOM set to DC volt, connect negative lead to a known good ground. • Back probe and connect positive lead to pin 14 at ECU connector F-123. • Turn ignition to ON position. NOTE: Quarter windows must be extended. • Momentarily operate hardtop control switch to OPEN position. • Read voltmeter. • **Is system voltage present?**	Yes ▶ No ▶	Go to **53-3.** Replace ECU. Restore vehicle. Retest system.
53-3 CHECK PASSENGER WINDOW MOTOR CIRCUITS FOR OPEN • Disconnect connector F-123 at ECU. • Using DVOM set to ohm scale, connect negative lead to pin 13 at ECU connector F-123. • Connect the positive lead to pin 14 at ECU connector F-123. • Read ohmmeter. • **Is there 10 ohms or less?**	Yes ▶ No ▶	Replace passenger window motor. Restore vehicle. Retest system. Go to **53-4.**
53-4 CHECK CIRCUIT GW 53 FOR OPEN • Connector F-123 at ECU disconnected. • Access and disconnect passenger window motor E-08. • Using DVOM set to ohm scale, connect positive lead to pin 13 at ECU connector F-123. • Connect the negative lead to pin 2 at passenger window motor connector E-08. • Read ohmmeter. • **Is there 3 ohms or less?**	Yes ▶ No ▶	Go to **53-5.** Repair circuit GW 53. Restore vehicle. Retest system.

PINPOINT TESTS

REFER TO: PAGES 42-15 THROUGH 42-17 FOR PRECAUTIONS BEFORE SERVICE, NOTES AND DEFINITIONS OF TERMS.
PAGES 42-33 THROUGH 42-40 FOR SYMPTOM CHARTS.
PAGES 42-41 THROUGH 42-46 FOR TROUBLESHOOTING HINTS.

DTC 53 (CONTINUED)

TEST STEP		RESULT ▶	ACTION TO TAKE
53-5	CHECK CIRCUIT GW 54 FOR OPEN		
• Connector F-123 at ECU disconnected. • Connector E-08 at passenger window motor disconnected. • Using DVOM set to ohm scale, connect positive lead to pin 14 at ECU connector F-123. • Connect the negative lead to pin 1 at passenger window motor connector E-08. • Read ohmmeter. • **Is there 3 ohms or less?**		Yes ▶ No ▶	Replace passenger window motor. Restore vehicle. Retest system. Repair circuit GW 54. Restore vehicle. Retest system.

PINPOINT TESTS

REFER TO: PAGES 42-15 THROUGH 42-17 FOR PRECAUTIONS BEFORE SERVICE, NOTES AND DEFINITIONS OF TERMS.
PAGES 42-33 THROUGH 42-40 FOR SYMPTOM CHARTS.
PAGES 42-41 THROUGH 42-46 FOR TROUBLESHOOTING HINTS.

DTC 56

TEST STEP		RESULT ▶	ACTION TO TAKE
56-1	CHECK VOLTAGE AT CIRCUIT GC 47		
• Disconnect object-in-trunk sensor connector F-115. • Using Digital Volt/Ohm Meter (DVOM) set to DC volt, connect negative lead to a known good ground. • Connect the positive lead to pin 2 of connector F-115. • Turn ignition to ON position. • Read voltmeter. • **Is system voltage present?**		Yes ▶ No ▶	Go to **56-2.** Go to **56-5.**
56-2	CHECK CIRCUIT GC 48 FOR GROUND THROUGH ECU		
• Connector F-115 at object-in-trunk sensor disconnected. • Using DVOM set to ohm scale connect negative lead to a known good ground. • Connect the positive lead to pin 1 of connector F-115. • Read ohmmeter. • **Is reading between 265 and 396 ohms?**		Yes ▶ No ▶	Go to **56-3.** Go to **56-4.**
56-3	CHECK CIRCUIT GC 49 FOR GROUND THROUGH ECU		
• Connector F-115 at object-in-trunk sensor disconnected. • Using DVOM set to ohm scale, connect negative lead to a known good ground. • Connect the positive lead to pin 3 of connector F-115. • Read ohmmeter. • **Is reading between 265 and 396 ohms?**		Yes ▶ No ▶	Replace object-in-trunk sensor. Restore vehicle. Retest system. Go to **56-6.**
56-4	CHECK CIRCUIT GC 48 FOR SHORT TO GROUND		
• Disconnect connector F-124 at ECU. • Connector F-115 at object-in-trunk sensor disconnected. • Using DVOM set to ohm scale, connect negative lead to a known good ground. • Connect the positive lead to pin 3 at ECU connector F-124. • Read ohmmeter. • **Is there continuity?**		Yes ▶ No ▶	Repair circuit GC 48. Restore vehicle. Retest system. Go to **56-7.**
56-5	CHECK CIRCUIT GC 47 FOR SHORT TO GROUND		
• Disconnect connector F-124 at ECU. • Connector F-115 at object-in-trunk sensor disconnected. • Using DVOM set to ohm scale, connect negative lead to a known good ground. • Connect the positive lead to pin 37 at ECU connector F-124. • Read ohmmeter. • **Is there continuity?**		Yes ▶ No ▶	Repair circuit GC 49. Restore vehicle. Retest system. Go to **56-8.**

PINPOINT TESTS

REFER TO: PAGES 42-15 THROUGH 42-17 FOR PRECAUTIONS BEFORE SERVICE, NOTES AND DEFINITIONS OF TERMS.
PAGES 42-33 THROUGH 42-40 FOR SYMPTOM CHARTS.
PAGES 42-41 THROUGH 42-46 FOR TROUBLESHOOTING HINTS.

DTC 56 (CONTINUED)

TEST STEP		RESULT ▶	ACTION TO TAKE
56-6	CHECK CIRCUIT GC 49 FOR SHORT TO GROUND		
• Disconnect connector F-124 at ECU. • Connector F-115 at object-in-trunk sensor disconnected. • Using Digital Volt/Ohm Meter (DVOM) set to ohm scale, connect negative lead to a known good ground. • Connect the positive lead to pin 4 at ECU connector F-124. • Read ohmmeter. • **Is there continuity?**		Yes ▶ No ▶	Repair circuit GC 47. Restore vehicle. Retest system. Go to **56-9**.
56-7	CHECK CIRCUIT GC 48 FOR OPEN		
• Connector F-115 at object-in-trunk sensor disconnected. • Connector F-124 at ECU disconnected. • Using DVOM set to ohm scale, connect one lead to pin 3 at ECU connector F-124. • Connect the second lead to pin 1 at object-in-trunk sensor connector F-115. • Read ohmmeter. • **Is there 3 ohms or less?**		Yes ▶ No ▶	Replace ECU. Restore vehicle. Retest system. Repair circuit GC 48. Restore vehicle. Retest system.
56-8	CHECK CIRCUIT GC 47 FOR OPEN		
• Connector F-115 at object-in-trunk sensor disconnected. • Connector F-124 at ECU disconnected. • Using DVOM set to ohm scale, connect one lead to pin 37 at ECU connector F-124. • Connect the second lead to pin 2 at object-in-trunk sensor connector F-115. • Read ohmmeter. • **Is there 3 ohms or less?**		Yes ▶ No ▶	Replace ECU. Restore vehicle. Retest system. Repair circuit GC 47. Restore vehicle. Retest system.
56-9	CHECK CIRCUIT GC 49 FOR OPEN		
• Connector F-115 at object-in-trunk sensor disconnected. • Connector F-124 at ECU disconnected. • Using DVOM set to ohm scale, connect one lead to pin 4 at ECU connector F-124. • Connect the second lead to pin 3 at object-in-trunk sensor connector F-115. • Read ohmmeter. • **Is there 3 ohms or less?**		Yes ▶ No ▶	Replace ECU. Restore vehicle. Retest system. Repair circuit GC 49. Restore vehicle. Retest system.

RETRACTABLE HARDTOP ELECTRONIC CONTROL UNIT, (ECU) POWER DISTRIBUTION CIRCUIT DIAGRAM

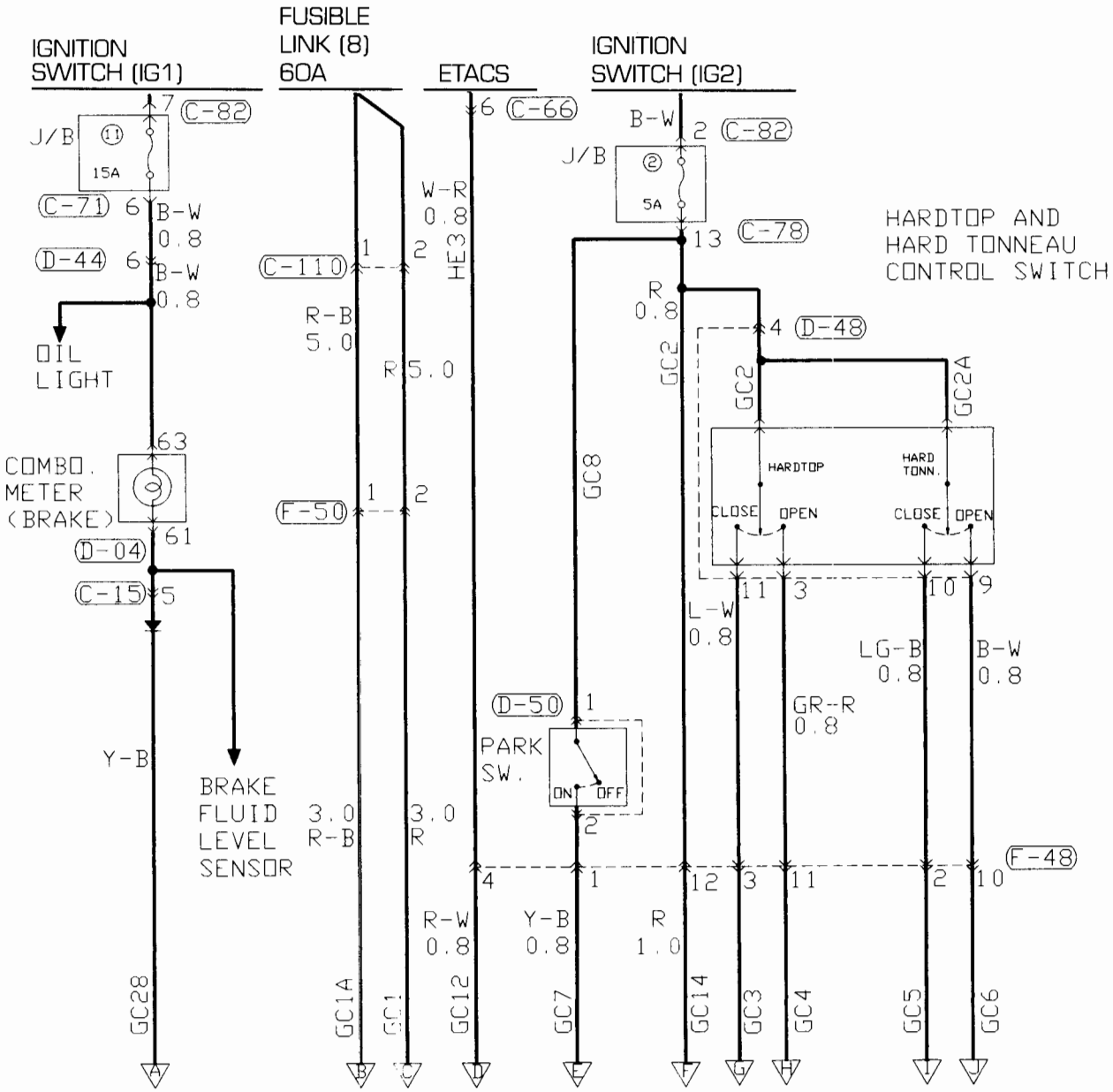

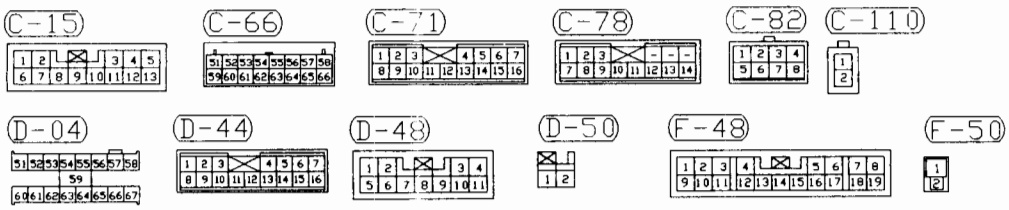

TSB Revision

POWER QUARTER WINDOW CIRCUIT DIAGRAM

CONTINUED FROM PAGE 134

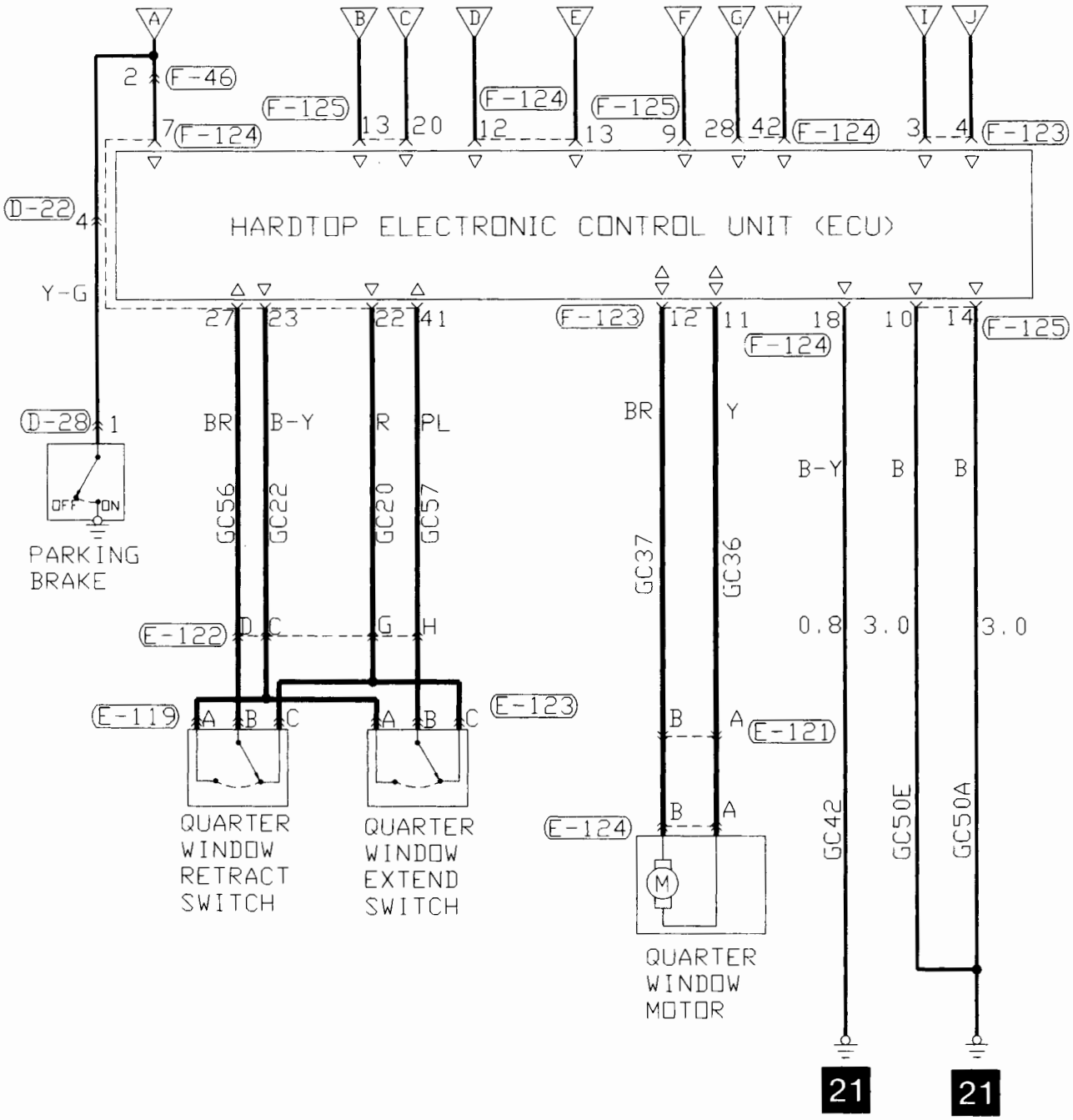

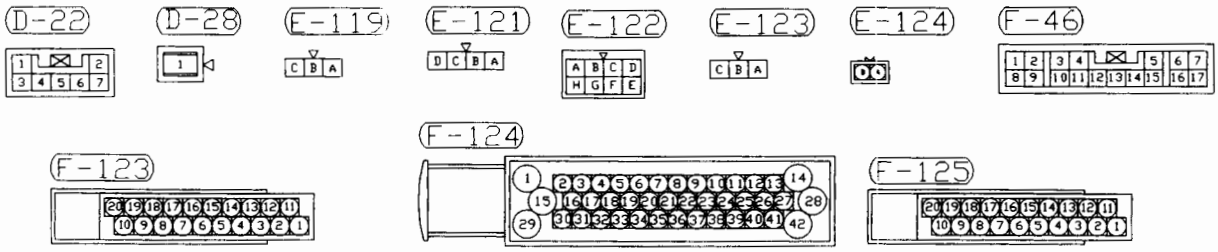

HEADER LATCH SYSTEM CIRCUIT DIAGRAM

CONTINUED FROM PAGE 134

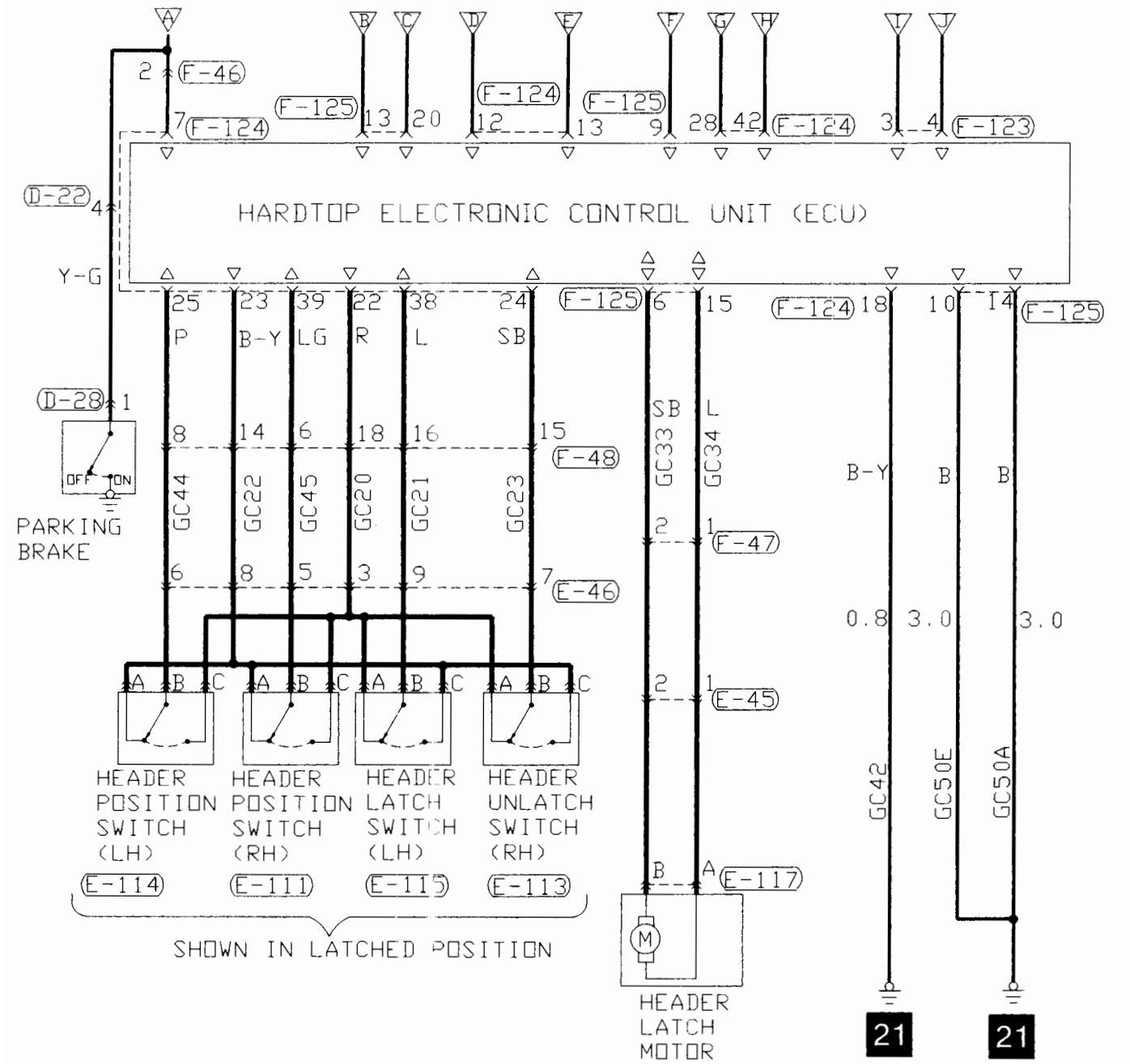

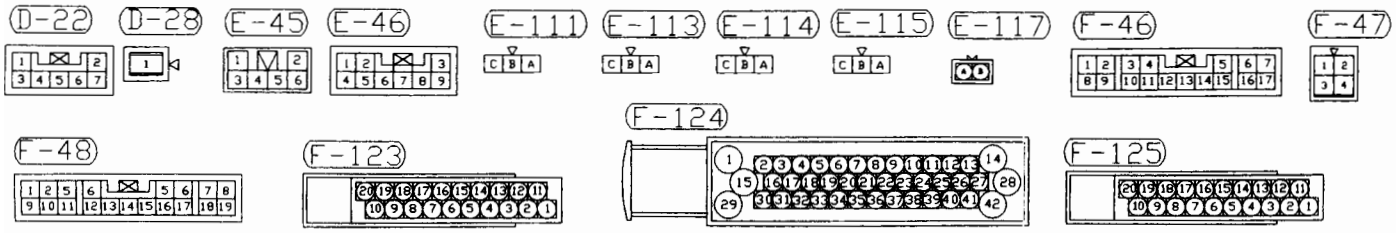

HARD TONNEAU LATCH SYSTEM CIRCUIT DIAGRAM

CONTINUED FROM PAGE 134

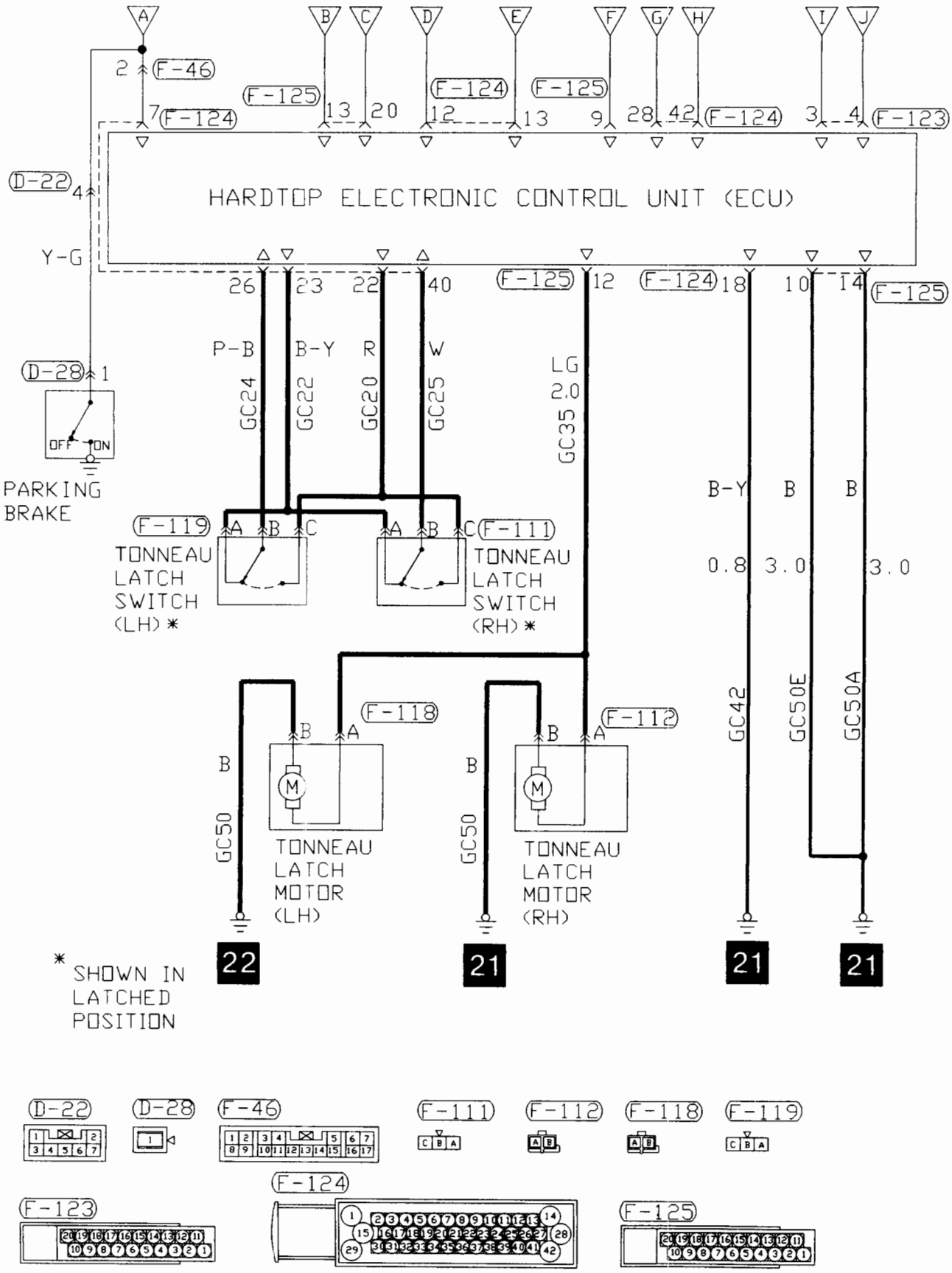

DRIVER'S DOOR POWER WINDOW CIRCUIT DIAGRAM

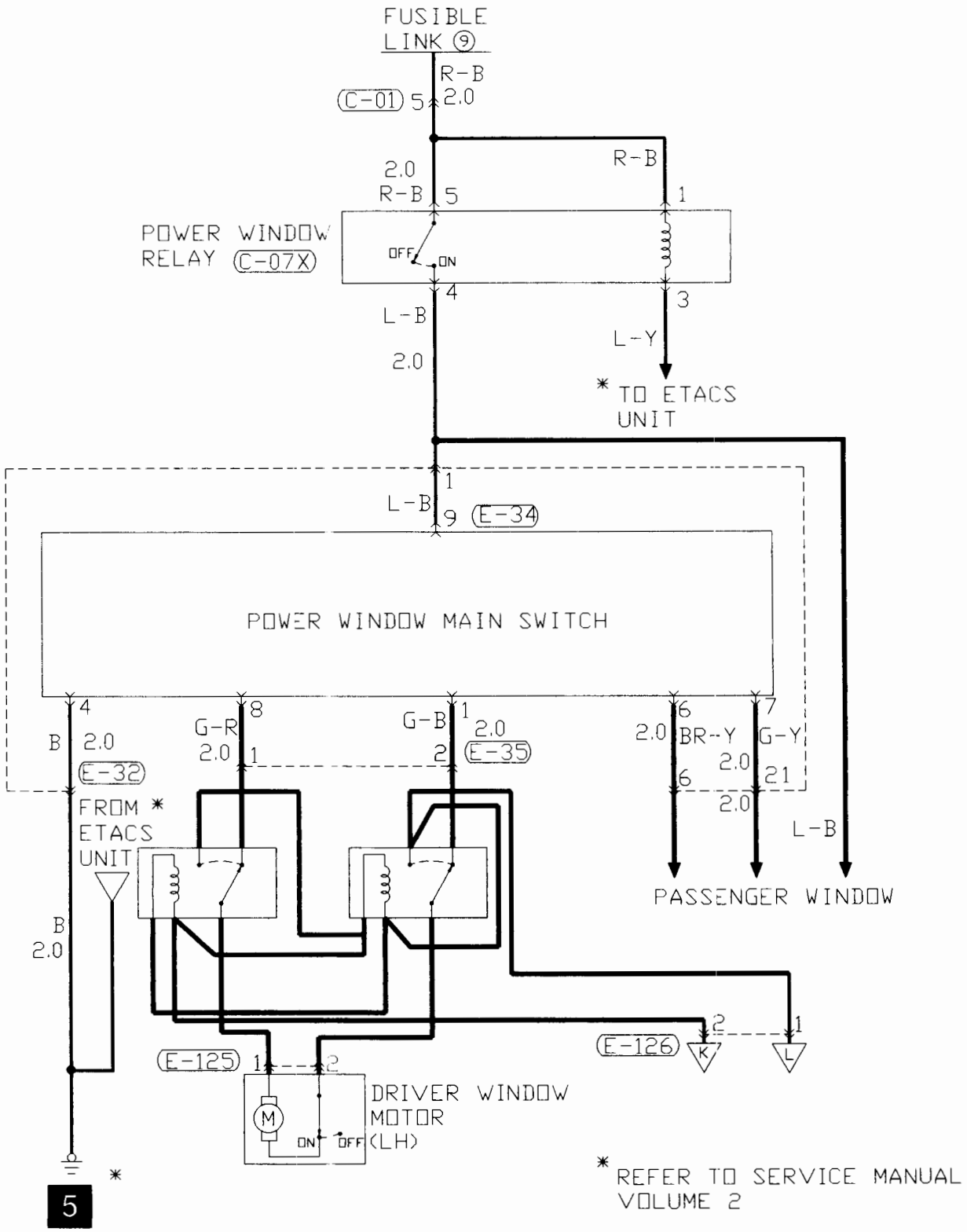

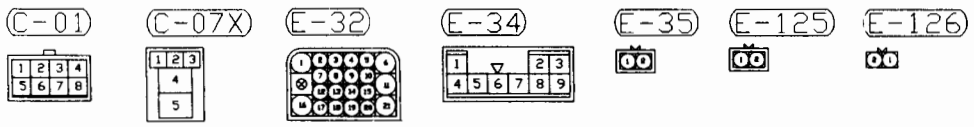

TSB Revision

DRIVER'S DOOR POWER WINDOW CIRCUIT DIAGRAM (CONTINUED)

CONTINUED FROM PAGE 134

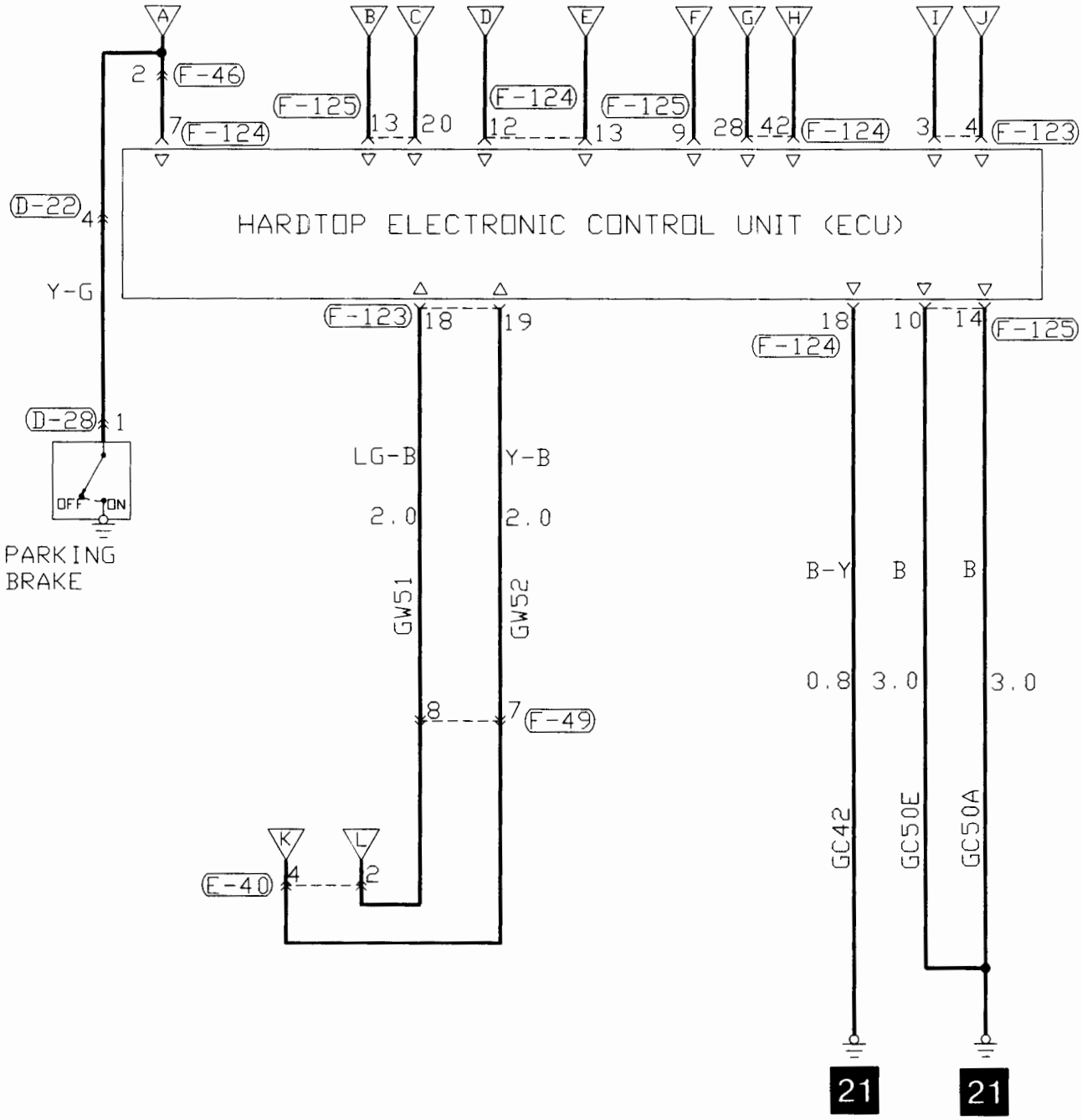

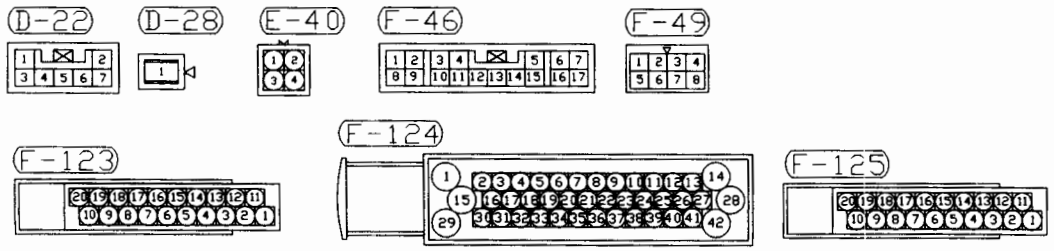

TSB Revision

PASSENGER'S DOOR POWER WINDOW CIRCUIT DIAGRAM

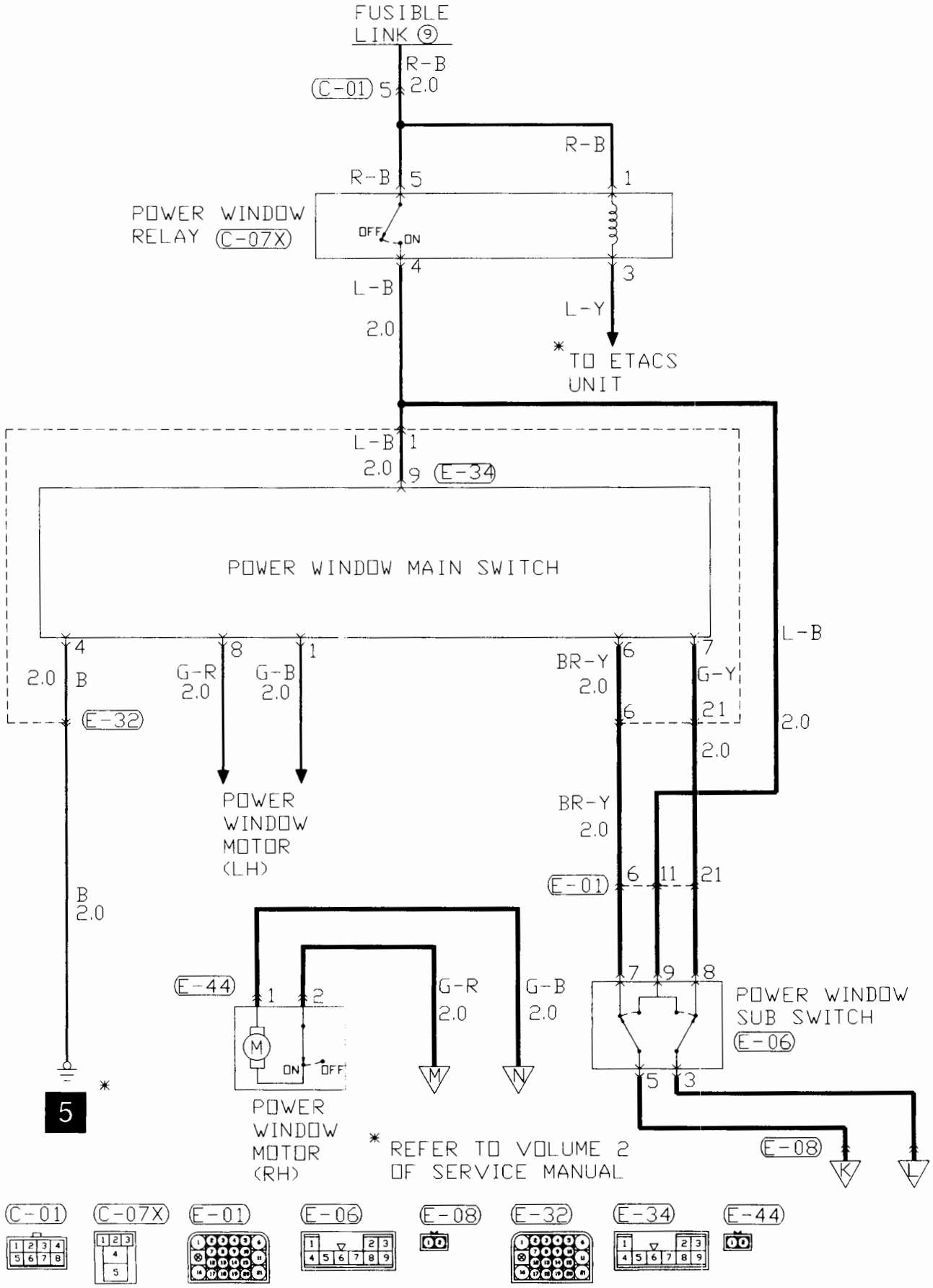

TSB Revision

PASSENGER'S DOOR POWER WINDOW CIRCUIT DIAGRAM (CONTINUED)

CONTINUED FROM PAGE 134

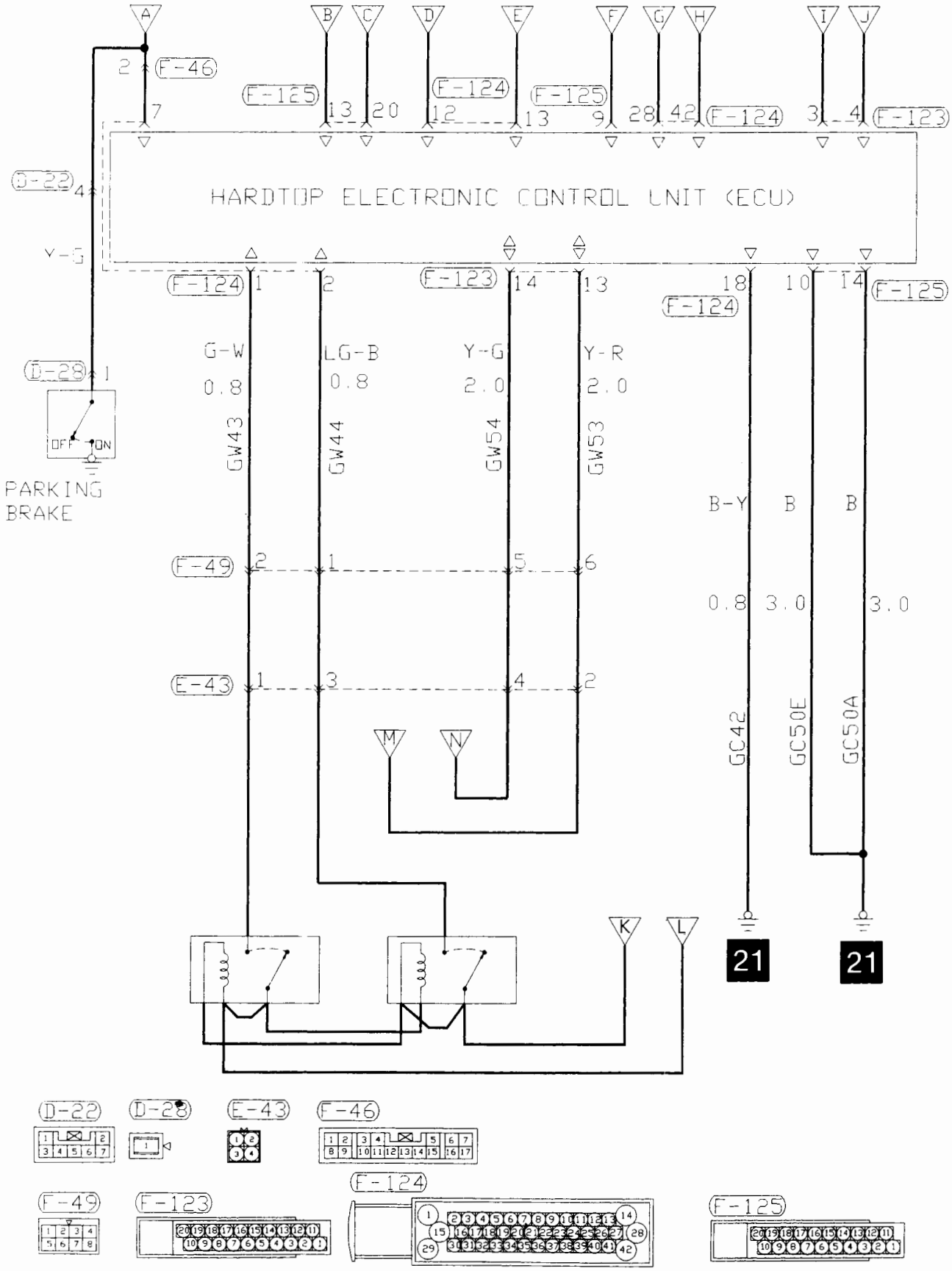

HARDTOP AND HARD TONNEAU CONTROL SWITCH CIRCUIT DIAGRAM

CONTINUED FROM PAGE 134

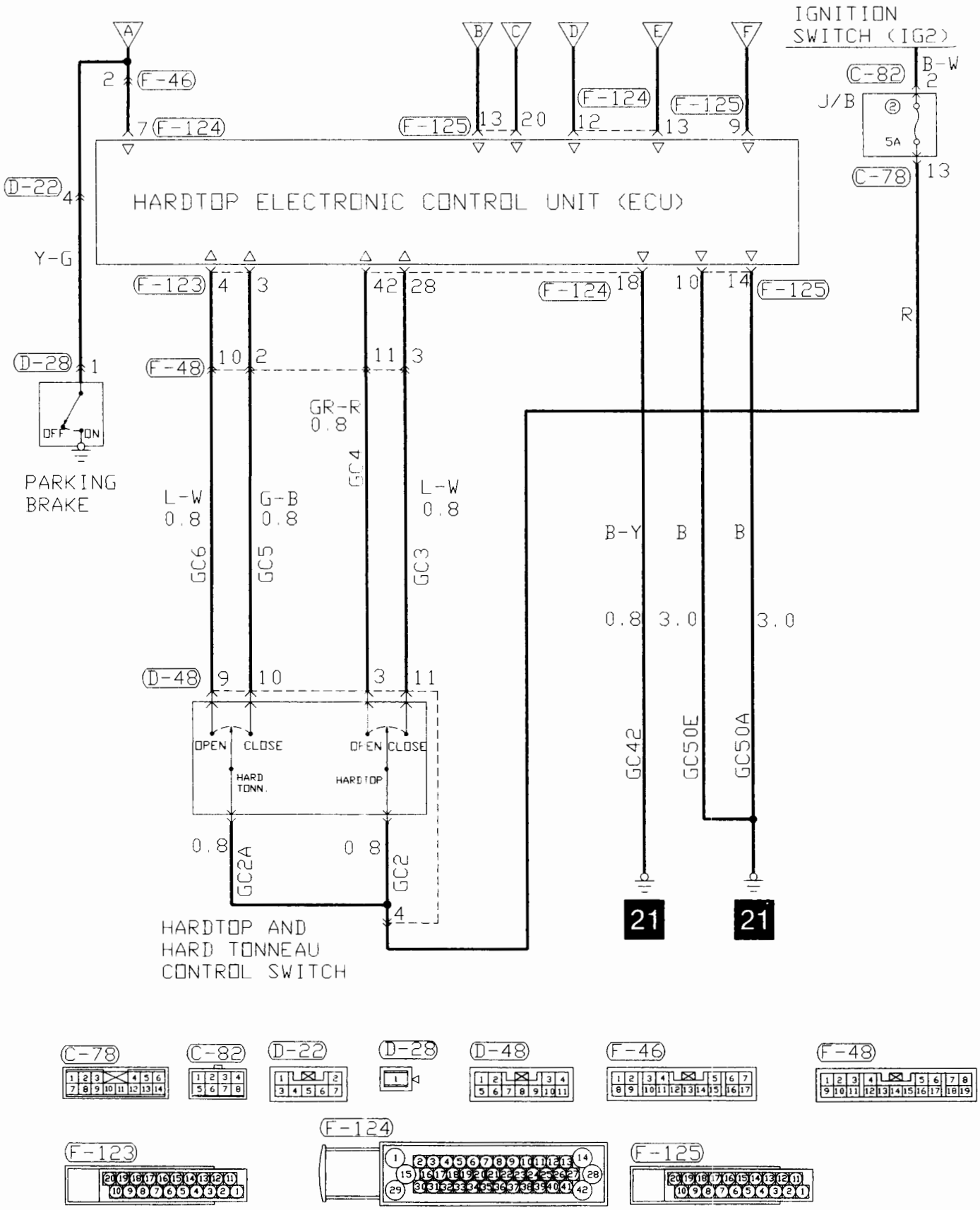

OBJECT-IN-TRUNK SENSOR CIRCUIT DIAGRAM

CONTINUED FROM PAGE 134

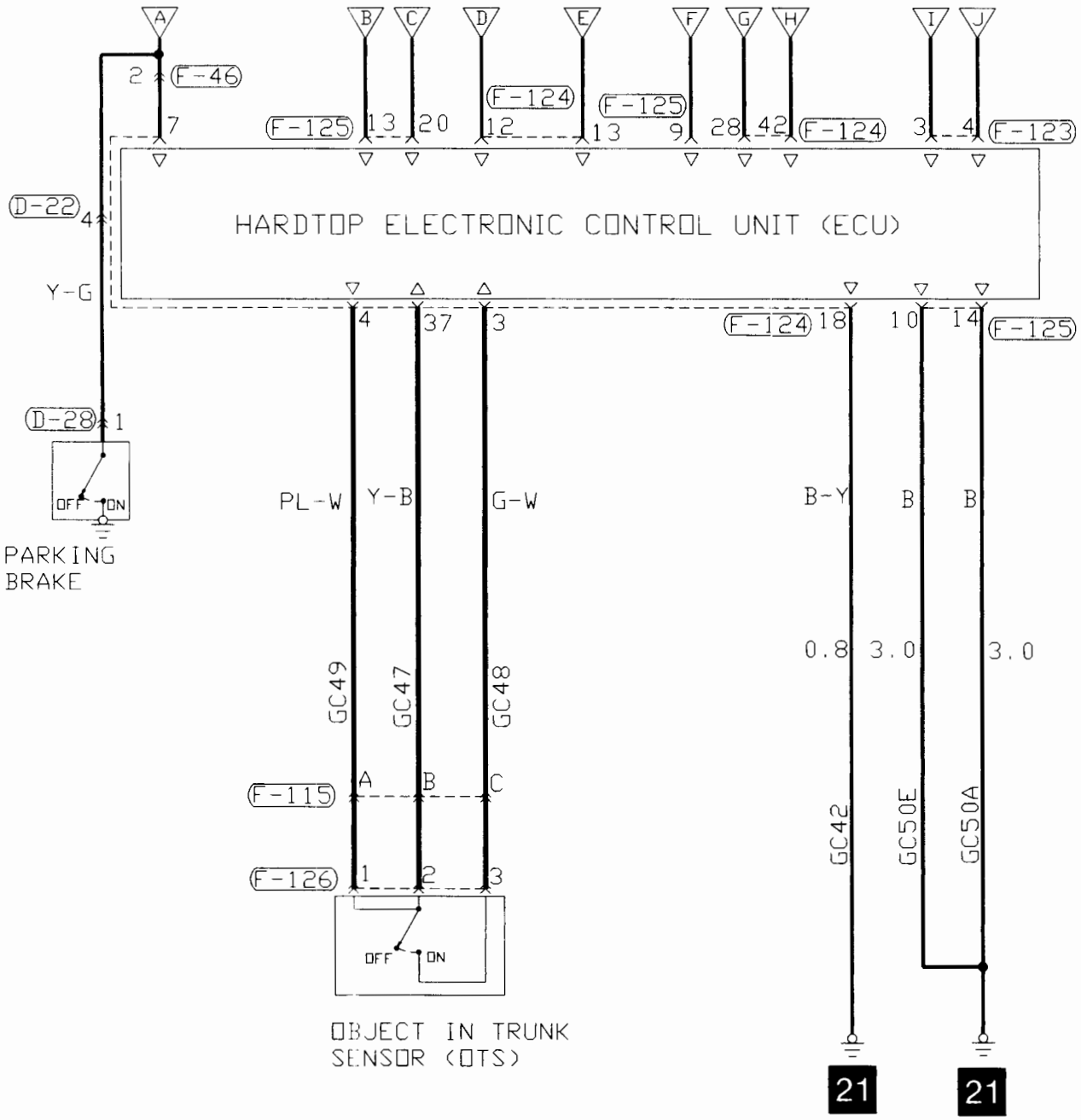

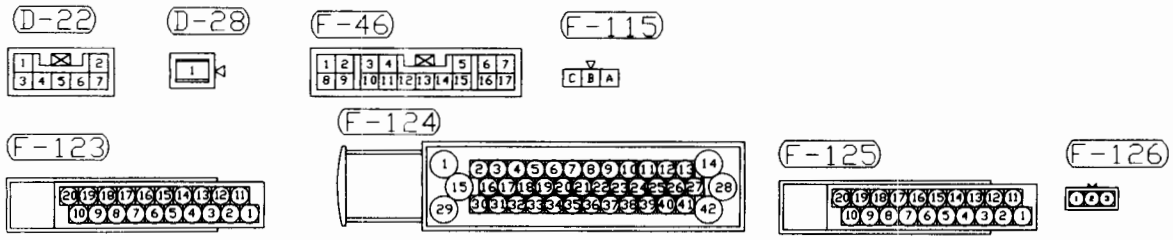

CHIME MODULE CIRCUIT DIAGRAM

CONTINUED FROM PAGE 134

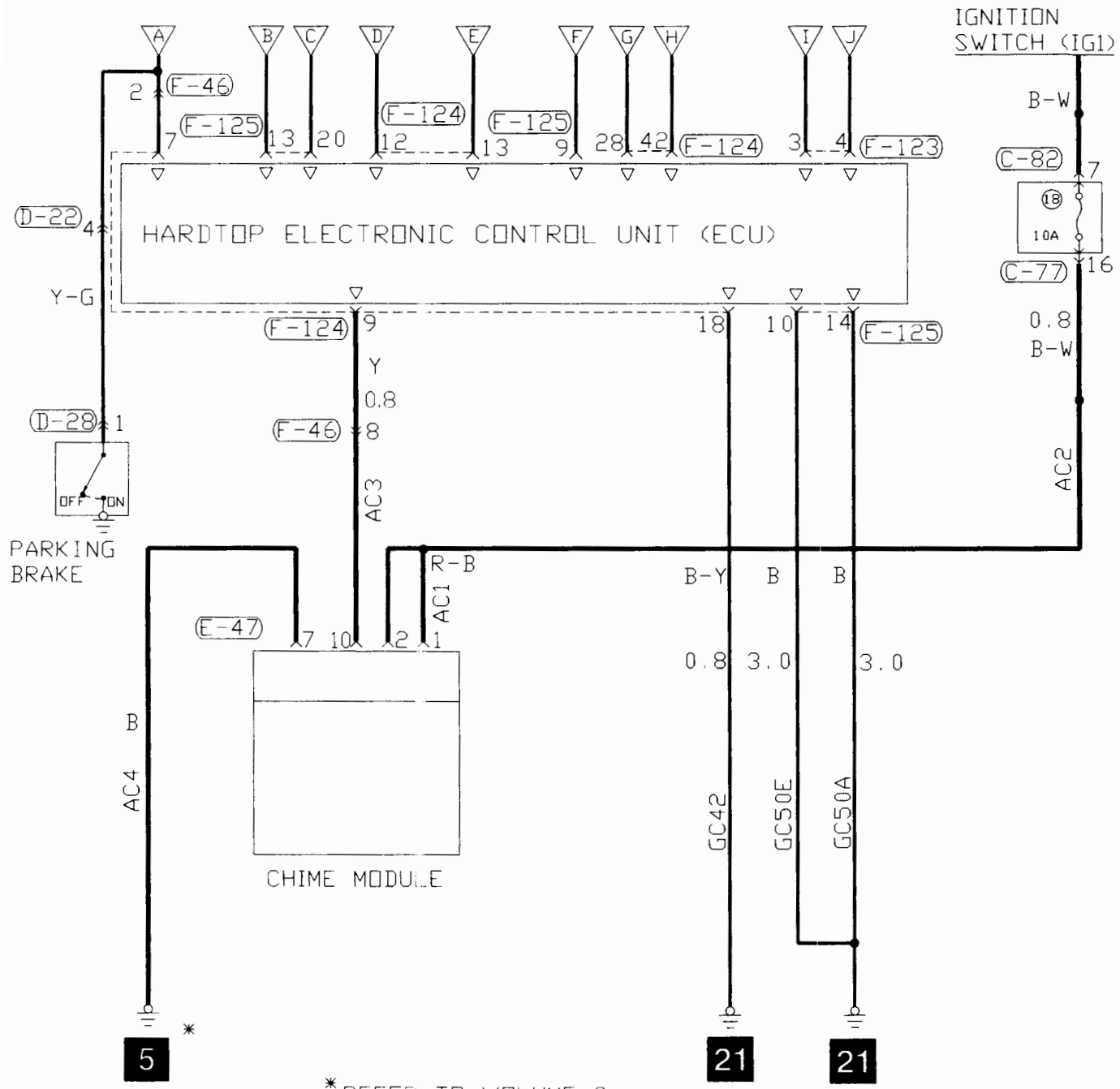

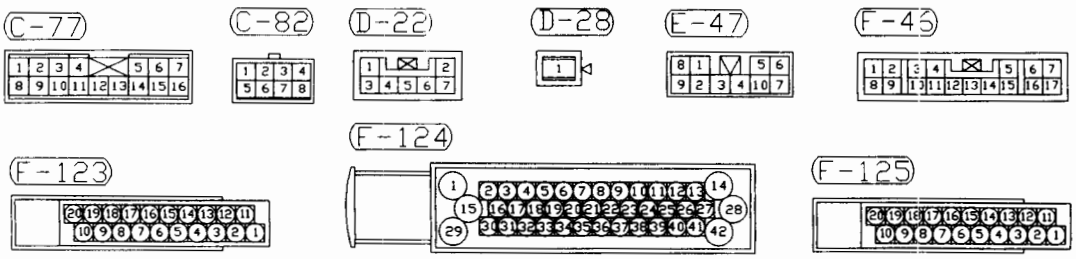

LED's CIRCUIT DIAGRAM

CONTINUED FROM PAGE 134

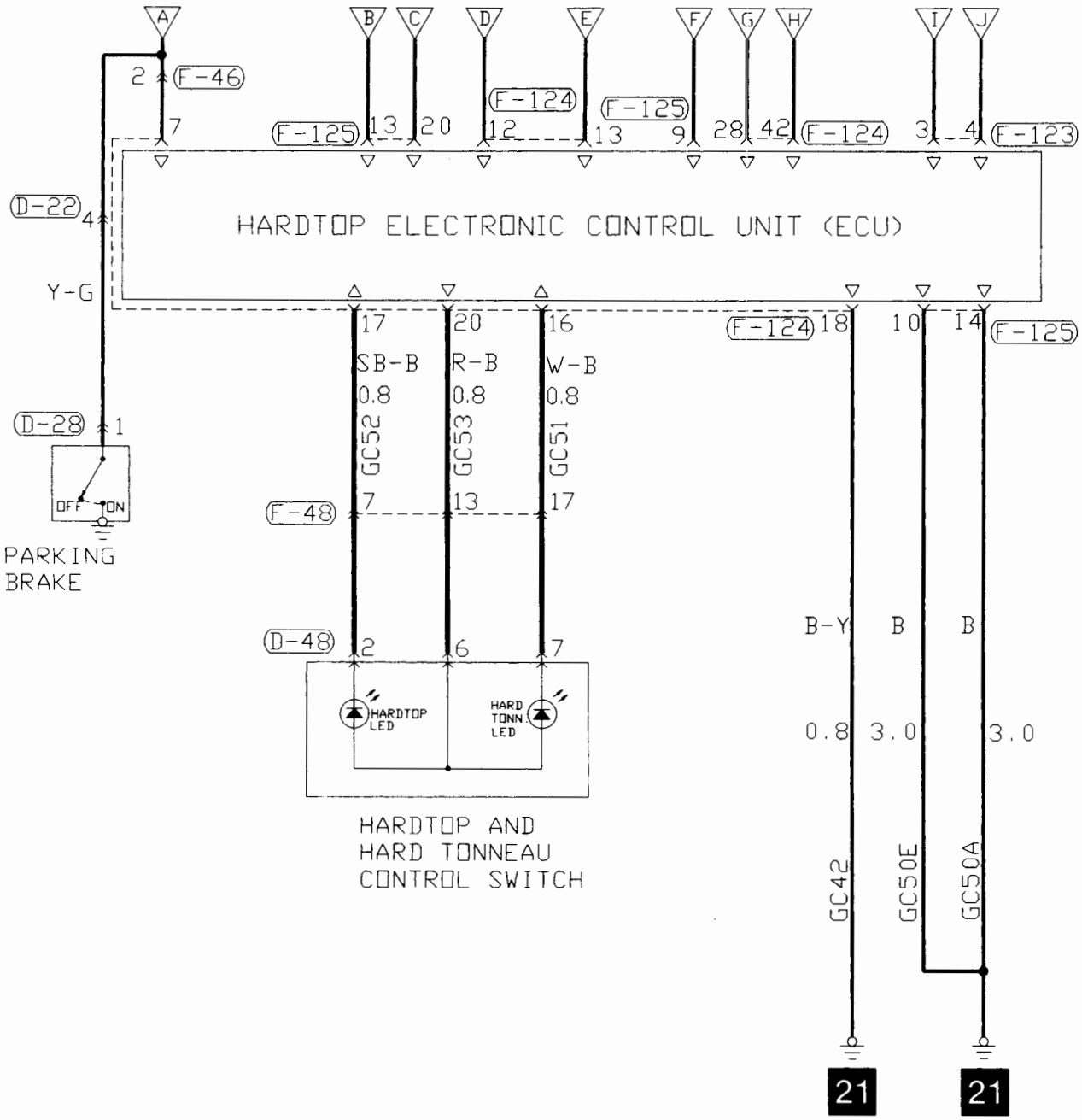

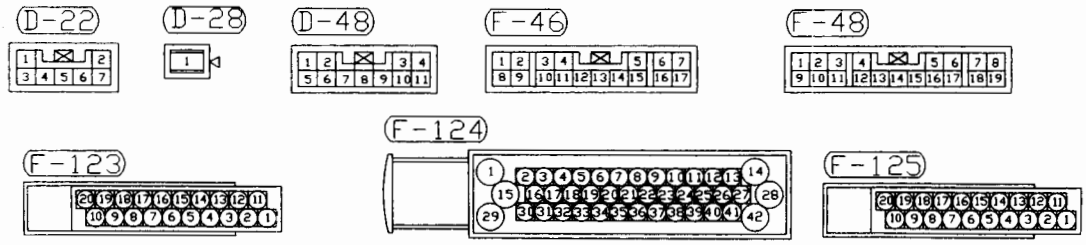

POTENTIOMETERS CIRCUIT DIAGRAM

CONTINUED FROM PAGE 134

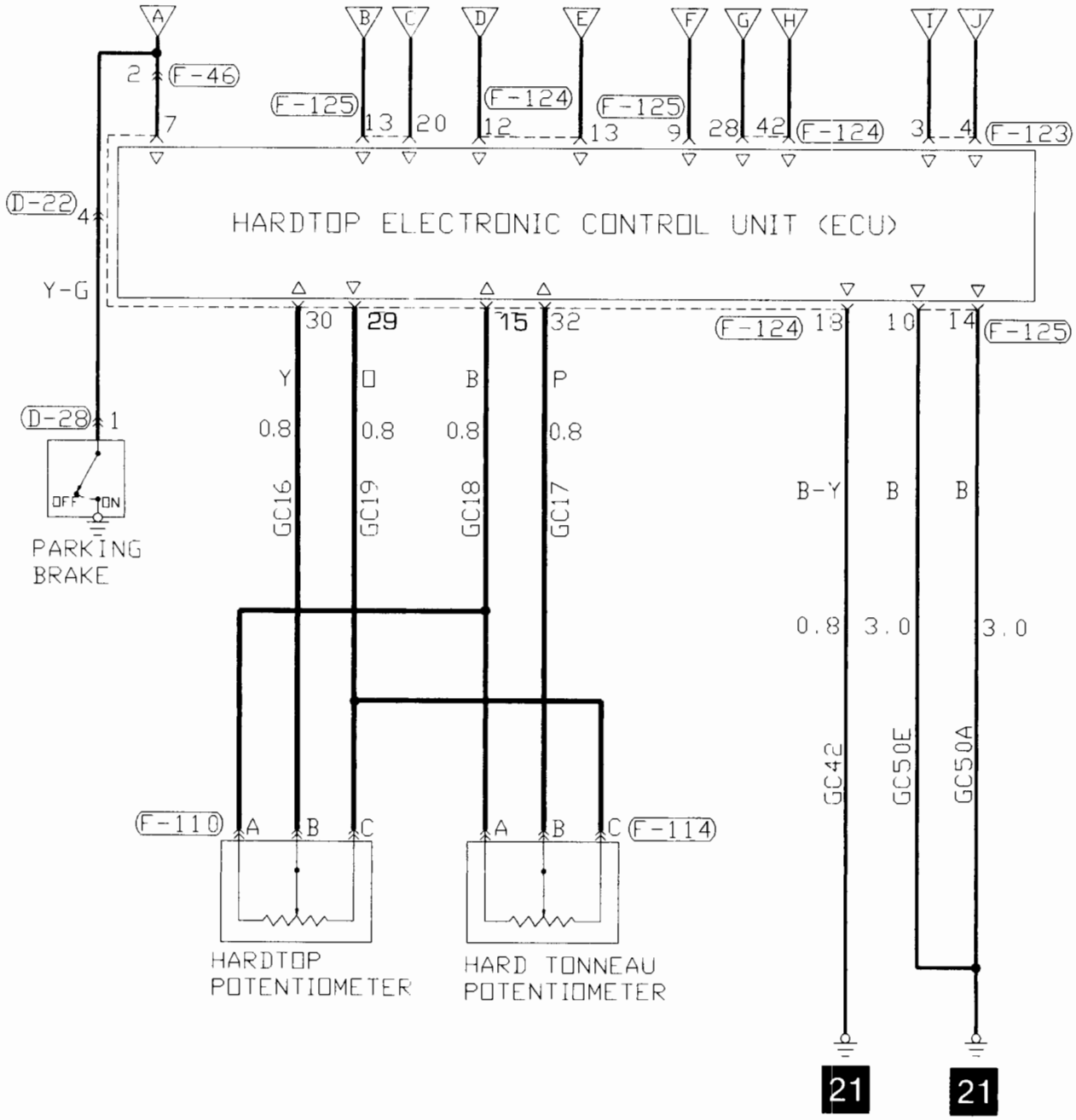

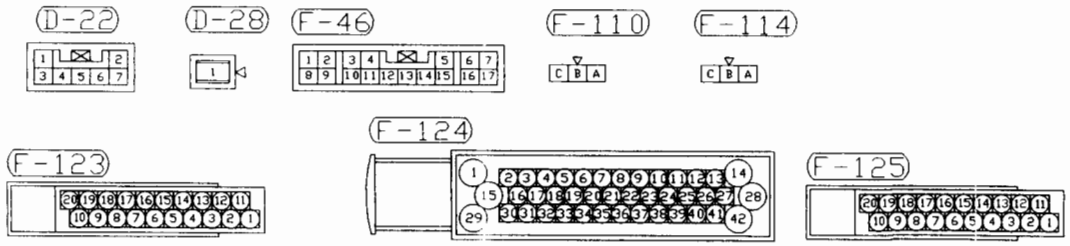

TSB Revision

HARDTOP AND HARD TONNEAU HYDRAULIC PUMPS CIRCUIT DIAGRAM

CONTINUED FROM PAGE 134

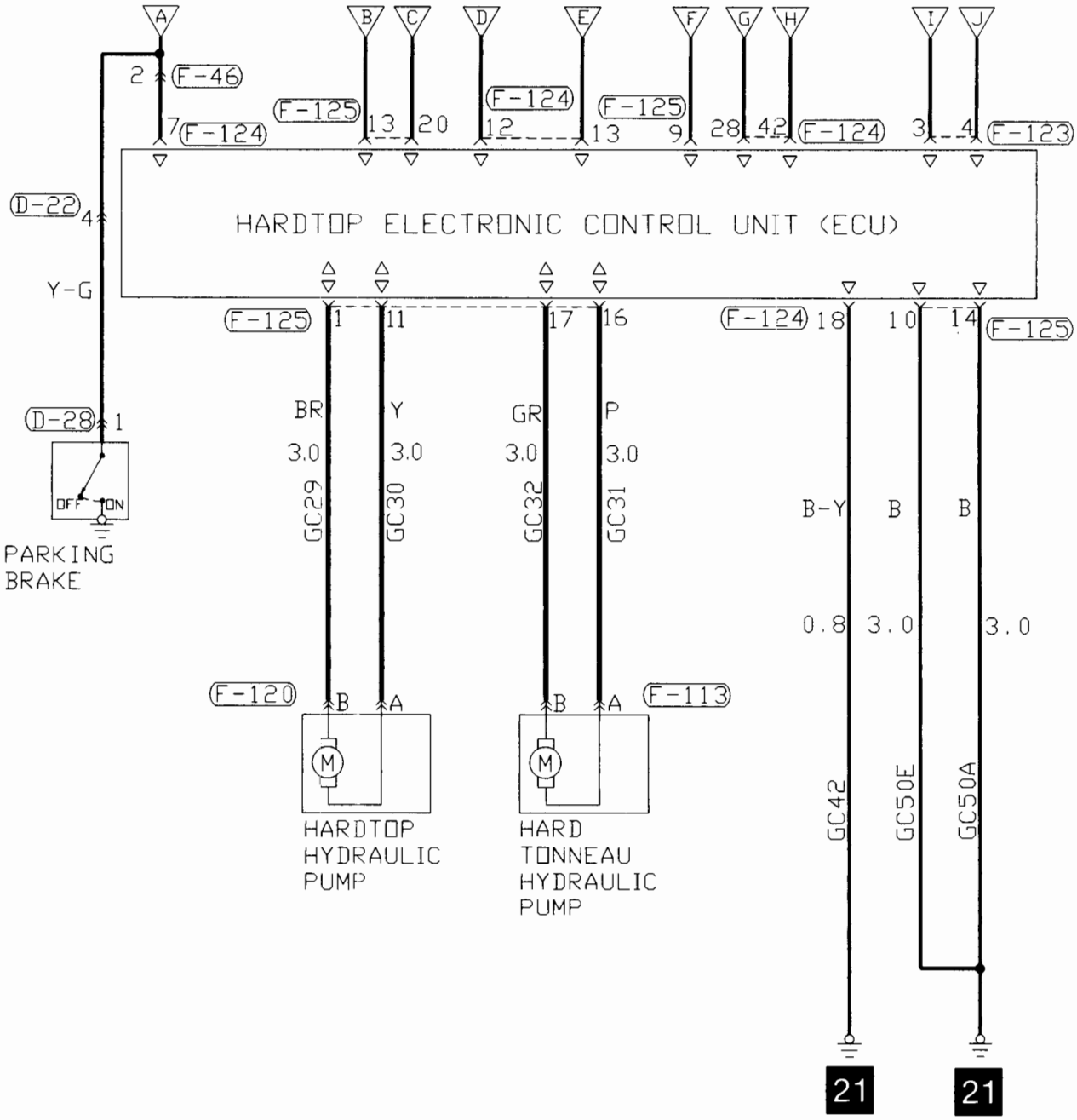

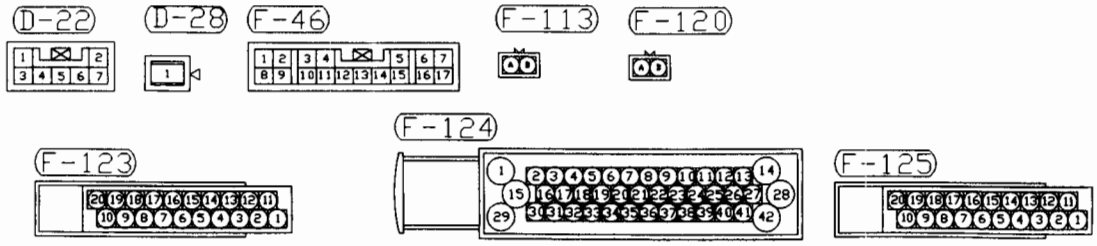

DATA LINK CONNECTOR (DLC) CIRCUIT DIAGRAM

CONTINUED FROM PAGE 134

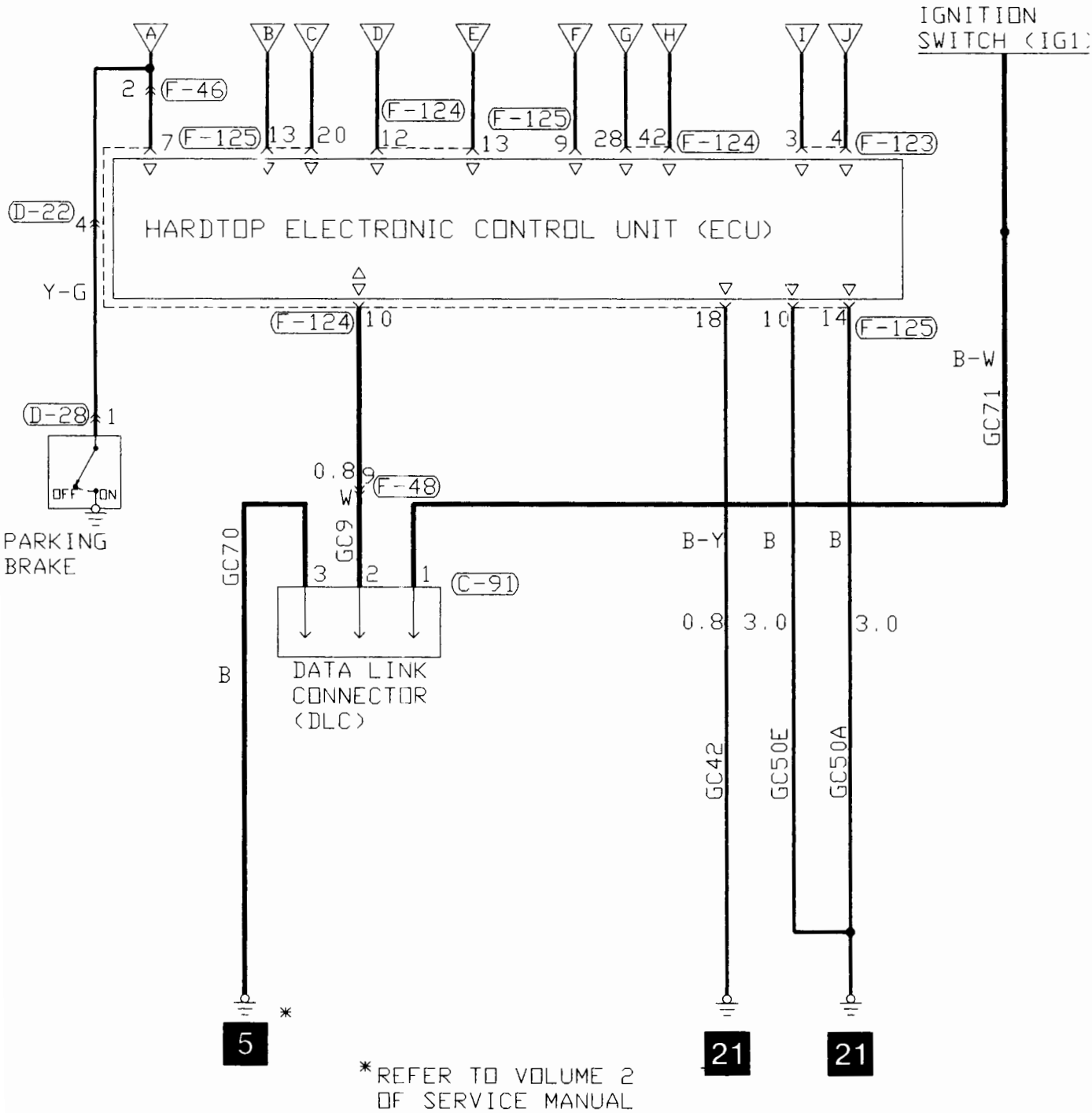

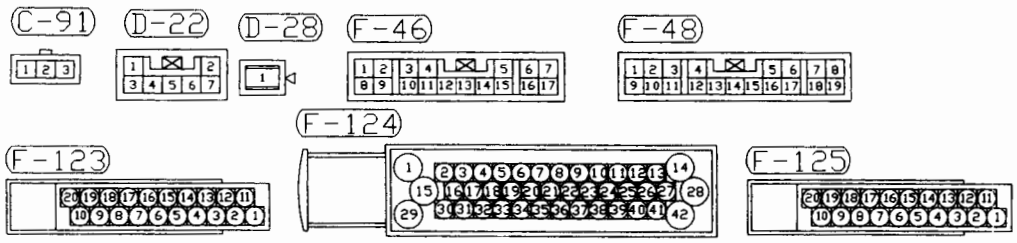

TSB Revision

SERVICE ADJUSTMENT PROCEDURES

RETRACTABLE HARDTOP ASSEMBLY

The topics below are addressed individually, but they MUST be considered as one when adjusting the hardtop.

- **ROOF PANELS**
- **UP-STOPS**
- **DOWN STOPS**
- **ROOF CENTER AND REAR HINGES**
- **LOCATOR PINS AND STRIKERS**
- **HEADER LATCH GARNISHES**
- **MAIN PIVOT BRACKETS**
- **BALANCE LINKS**

Description

The hardtop is attached to the vehicle by two main pivot brackets attached to the Spyder-unique body structure over the rear wheels. Locating pins (roll pins) precisely locate the main pivots to the body structure. Service part main pivot brackets are pre-drilled to accept the roll pins. This facilitates overall hardtop-to-vehicle alignment with minimal adjustment.

Caution

1. **The location of the main pivot brackets to the body structure is extremely critical for the hardtop system to operate properly and consistently.**
2. **Using the roll pins to align the main pivots to the body structure should only be used on a vehicle that has been proven to be dimensionally at factory specifications, i.e. you must determine by measuring that the vehicle body (regular coupe body structure, and the Spyder-unique body structure) has not sustained structural damage, or had structural parts replaced or repaired. In cases where the vehicle has sustained damage or had structural parts replaced not to specification, DO NOT attempt to use shims between the hardtop and the rear hinge assembly.**
3. **The only recommended way to use a vehicle that has been damaged or had structural parts replaced, is to rebuild the affected area, or parts, to bring it back into specification.**

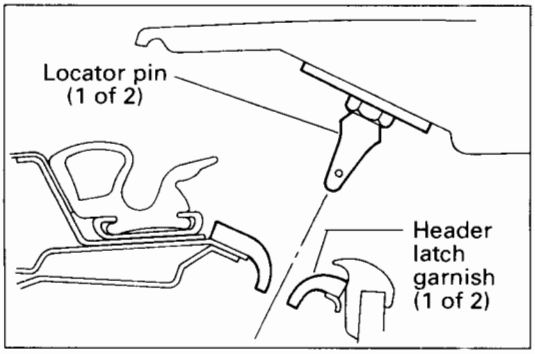

The front of the hardtop locates to the windshield header latch garnishes by tapered locator pins. The parts next to the pins are strikers for the latches. The strikers are not adjustable.

The locator pins can only be adjusted up and down for flushness of the hardtop roof to the windshield header. No side-to-side or front-to-back adjustment is available at the header.

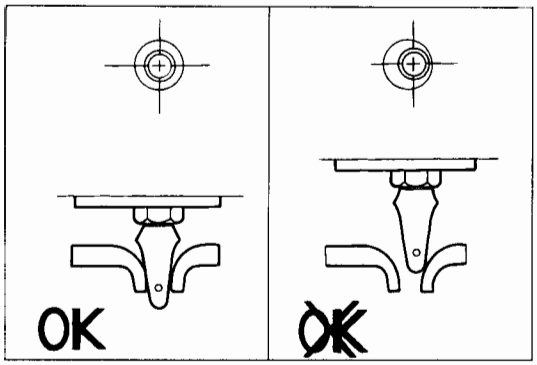

Since the windshield header-to-hardtop location is not adjustable, and the main pivot brackets should not be adjusted, they are the foundation for all hardtop-to-body and tonneau-to-body adjustments.
The interaction between the locator pins and latch garnishes is designed to be smooth and concentric. A binding action or misalignment of the pin to the hole indicates improper adjustment of one or more components of the hardtop system, particularly the balance links. In some cases, binding locator pins may be an indication of damaged body structure at the header or other area of the vehicle.

Caution
Mechanical adjustment to, or replacement of, the retractable hardtop system components will require that the hardtop ECU be run through "auto-configuration" using the ASC INCORPORATED computerized diagnostic system. DO NOT perform any adjustment or replacement without having the latest version of the ASC INCORPORATED diagnostic system.

When adjusting one component or area of the hardtop, all components relating to hardtop operation should be checked, and readjusted, if necessary. Adjustments or difference in weatherstrip compression or hardness, can affect inputs to the ECU. This ultimately affects the overall performance of the hardtop system.

When the hardtop is not adjusted properly nearly all areas of the hardtop are affected. Assuming that the body structure, main pivots, locator pins, and hinges are to specification and properly adjusted, typically adjustment problems can be attributed to the balance links and their adjustment to the center roof hinges. Problems that can be balance link-related can be the following:
- hardtop side rail weatherstrip sealing to the door window glass;
- header latch latching and unlatching;
- lock-up of hardtop roof panels before closing;
- hardtop locator pin alignment to the header latch garnishes;
- over-crowning of the hardtop panels (as seen from the side of the vehicle);
- power quarter window system operation and adjustment;
- rear hardtop roof section to front section sealing and the gap between the two roof sections.

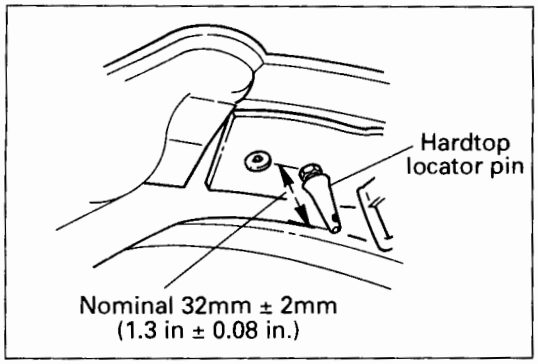

ADJUSTMENT OF THE RETRACTABLE HARDTOP SYSTEM

INSPECT

1. HARDTOP LOCATOR PINS

(1) Using the hardtop "OPEN" switch, open the hardtop halfway.

(2) Inspect both hardtop locator pins for damage.

- If the pins are in good condition, go to Step 2.
- If the pins are damaged, replace them using the following procedure.
  1. Loosen the locator pin's jam-nut and remove the locator pin.
  2. Install the pin with the jam-nut to the bracket. Attain 32 mm 2 ± mm (1.3 in. ± 0.08 in.) as shown in the illustration.
  3. Tighten jam-nut.

Standard value: 22 - 34 Nm (17 - 25 ft.lb.)

Check for roof to header flushness. Adjust as necessary. Refer to Step 5.

2. HEADER LATCH GARNISHES

Inspect both header latch garnishes for wear or damage.

- Replace them if they are worn or damaged. To remove them, remove the attaching bolts and remove the adhesive tape securing the weatherstrip to it.
- If the garnishes are in good condition, go to Step 3.

Standard value: LH tapered hole should be round, and both the RH slot and LH hole should show no sign of galling.

3. ALL HARDTOP RELATED WEATHERSTRIPS

Inspect all hardtop related weatherstrips. Replace them if necessary. Refer to WEATHERSTRIPS, in this section for removal and installation instructions. Go to Step 4.

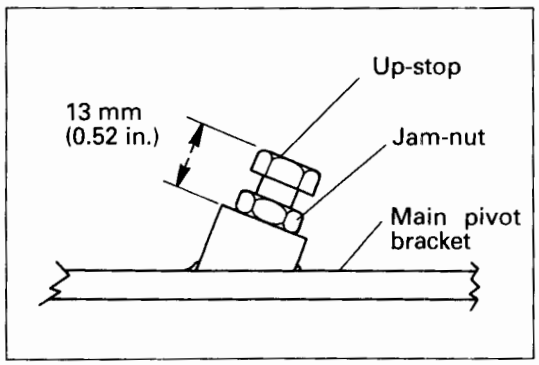

4. HARDTOP UP-STOPS

NOTE
Although these are referred to as up-stops, more accurately they perform the function of down-limiters for the hardtop cylinders. They do not control the "up" position of the hardtop.

Inspect that the left and right up-stops are at the correct height as shown in the illustration. Adjust as necessary using the following procedure.

(1) Open the hardtop halfway.
(2) Loosen the jam-nut.
(3) Adjust the up-stop to the Standard value.

Standard value: 13 mm (0.52 in.)

(4) Tighten the jam-nut.

Standard value: 22 - 34 Nm (17 - 25 ft.lb.)

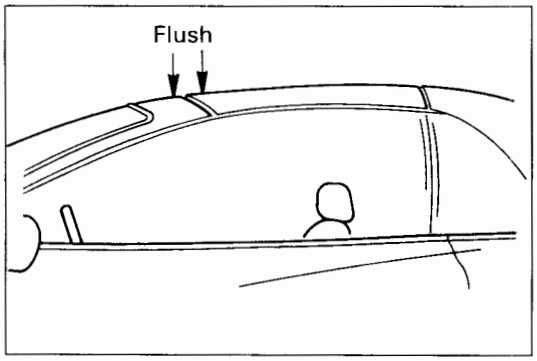

5. HARDTOP FLUSHNESS TO WINDSHIELD HEADER

(1) Close the hardtop.

NOTE
If you are not sure the header latches are adjusted properly, remove the header garnish and latch the hardtop using manual operation (refer to MANUAL OPERATION - HEADER LATCHES in Group 00).

(2) Check for flushness of the hardtop to the windshield header skin.

NOTE
The front roof panel may be flush to 3 mm (0.12 in.) below header.

Standard Value: -2 mm +2 mm -1 mm (-0.08 in. +0.08 in. -0.04 in.)

NOTE
Flushness is a function of the pull force of the header latches combined with the height of the hardtop locator pins to the header latch garnishes. Both systems MUST be working together in order to achieve proper flushness with proper latching effort.

- If the flushness is not acceptable, the header latch system may not be correctly adjusted (refer to **HEADER LATCH SYSTEM** adjustment, in this section), and/or the hardtop locator pins may need adjustment (refer to **HARDTOP LOCATOR PINS** in this section).
- If the flushness is OK go to next step.

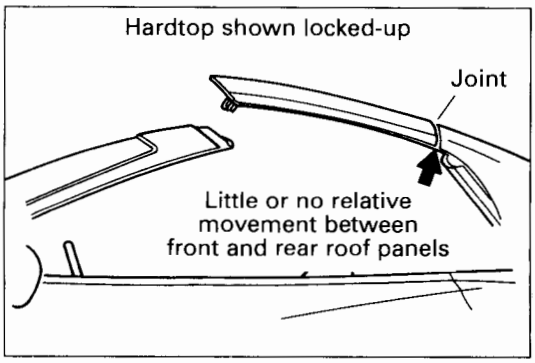

6. HARDTOP ROOF LOCK-UP BEFORE CLOSING

Open, then close, the hardtop several times using the switch. While closing the hardtop observe the front roof panel to be sure it locks-up with the rear roof panel according to the Standard value.

NOTE
The hardtop MUST lock-up in order for the hardtop locator pins to properly drop into the header latch garnishes. Otherwise, galling of the latch garnishes will

occur, or the locator pins may not align with the garnishes.

Standard value: Hardtop locks-up approximately 51.4 - 102.8 mm (2 - 4 in.) before it completely closes.

NOTE
If hardtop lock-up is not at the Standard value, most likely the balance links require adjustment. Go to Steps 7. 8. 9.

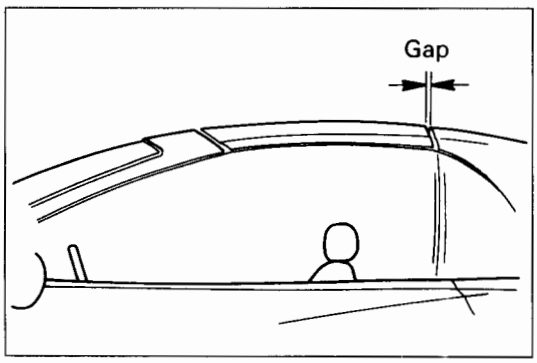

7. 8. 9. GAP BETWEEN FRONT AND REAR ROOF PANELS / FLUSHNESS OF FRONT ROOF PANEL-TO-REAR ROOF PANEL / SIDE-TO-SIDE ALIGNMENT OF FRONT ROOF PANEL TO REAR ROOF PANEL

NOTE
When the alignment and/or gap is not correct, this may be attributed to several components such as the balance links are not adjusted properly, the center roof hinges may require shims added or removed, or the center roof hinges are not adjusted or set properly.

Caution
In this particular area of the hardtop, the roof center hinges, balance links, and even the hardtop weather-strip play a major role in achieving proper hardtop alignment and flushness.
Be aware that if either the balance link or a hinge is loosened at any time, for even the slightest adjustment, that could misalign that area.

(1) Check the gap between the front and rear roof panels at the left and right corners and in the center as shown in the illustration.

Standard value: 6 mm ± 1.0 mm (0.24 in. ± 0.04 in.) gap

- If the gap is within the Standard value, go to Step 2 of this Step.
- If the gap is not OK, go to Step 10.

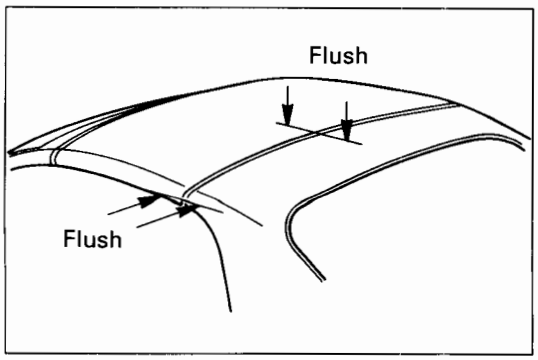

(2) Check the flushness along the gap between the roof panels as shown in the illustration.

NOTE
The rear roof panel may be flush to 2 mm (0.08 in.) lower than front panel.

Standard value: Flush at the sides and top 0 - 2 mm (0 in. - 0.08 in.)

- If the roof panels are within the Standard Value, continue.
- If the roof panel alignment is not within the Standard Value, go to Step 11.

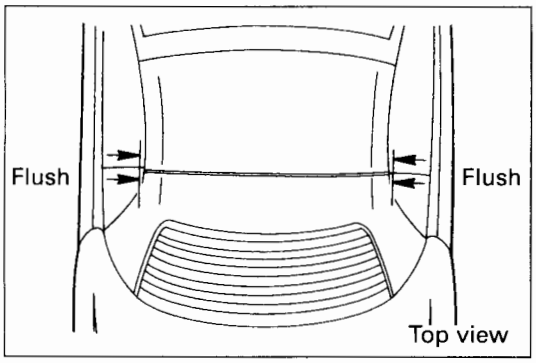

(3) Check the alignment side-to-side of the roof panels to each other along the gap.

NOTE
The rear roof panel may be flush to 2 mm (0.08 in.) inward from front panel.

Standard value: Flush at the sides and top 0 - 2 mm (0 in. - 0.08 in.)

- If the alignment is within the Standard Value, go to Step 10.
- If the alignment is not within the Standard Value, go to Step 11.

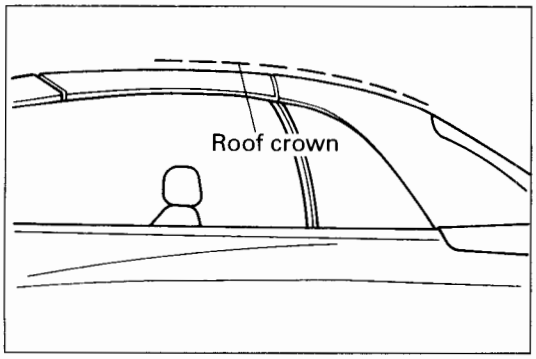

10. HARDTOP ROOF CROWN (AS SEEN FROM THE SIDE OF THE VEHICLE)

NOTE
1. If the hardtop is improperly crowned it will cause misalignment of the hardtop locator pins to the header latch garnishes, improper sealing of the door windows to the side rail weatherstrips, improper or inconsistent quarter window operation and sealing.
2. An over-crowned roof may be caused by an improperly adjusted balance link and/or center roof hinge.

(1) Remove the LH and RH quarter trim panels.
(2) Remove the left and right quarter window moldings (see GROUP 51, in this Manual).
(3) Open the vehicle doors, and close and latch the hardtop. Remove rear roof headlining and using a 5mm Allen wrench retract the quarter windows by turning the motor clockwise.

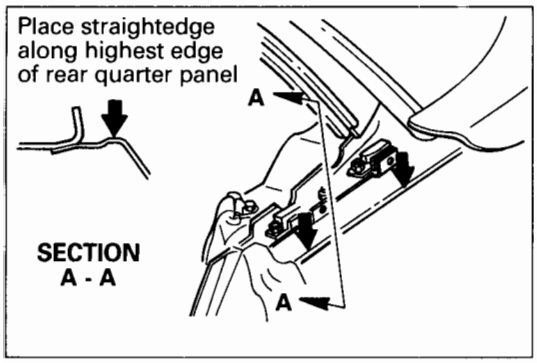

(4) Place a straightedge along the highest point of LH and RH rear fenders as shown in the illustration. The vehicle doors must be open. The straightedge must extend forward past the B-pillar a minimum of 50 mm (2 in.)

NOTE
Seek assistance and/or use clamps, adhesive tape, or similar holding devices to hold the straightedges in place.

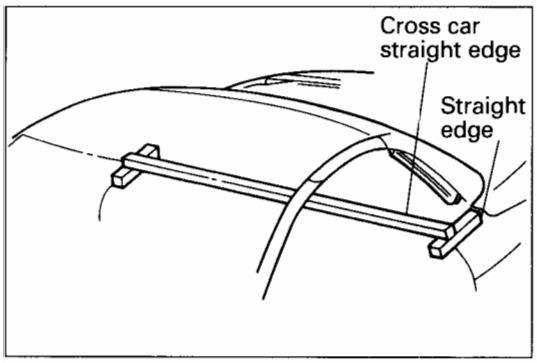

(5) Place another straight edge across the two straight edges as shown in the illustration.

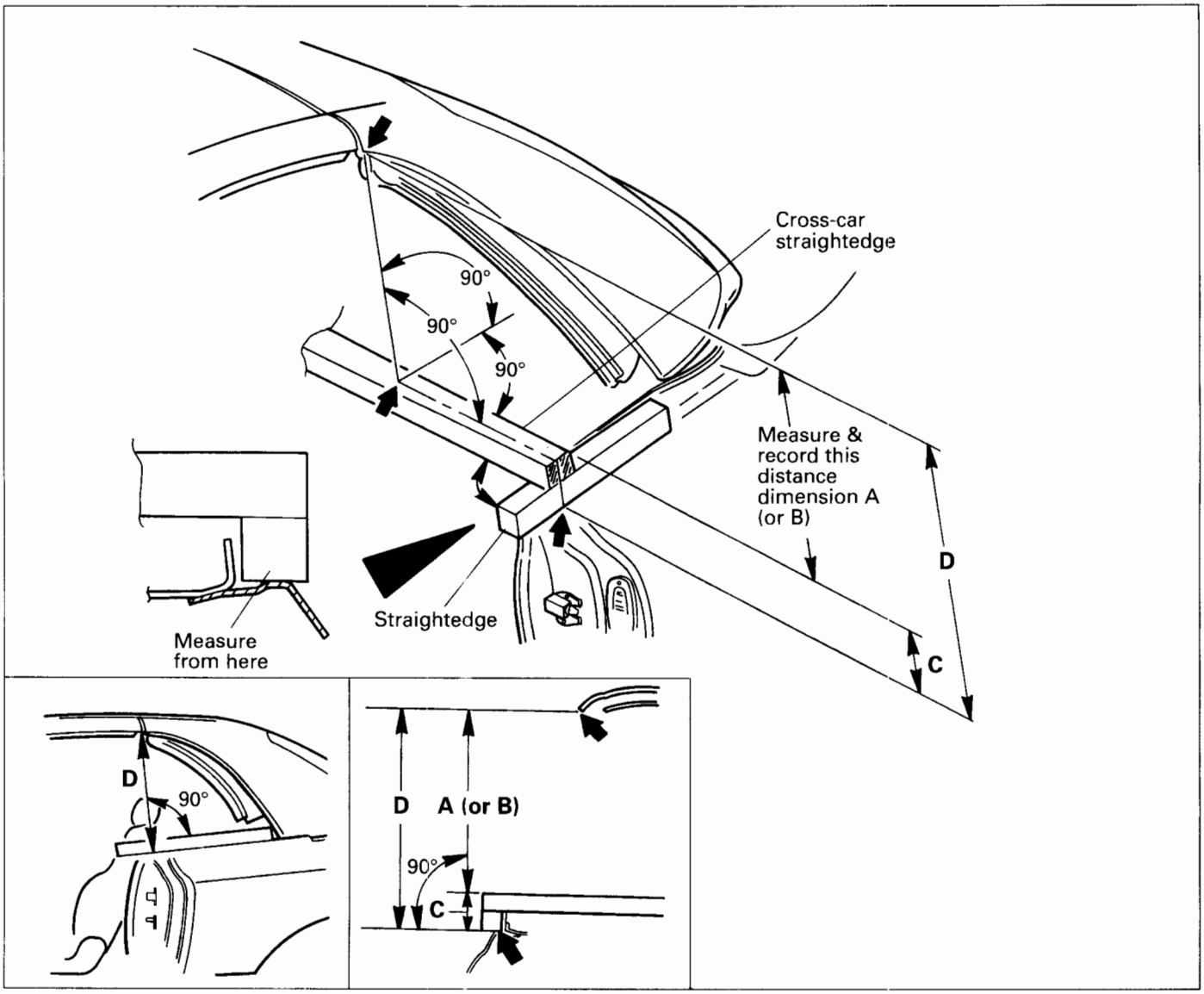

NOTE
Set the measuring instrument perpendicular (90°) to the bottom edge of the straight edges resting on the body.

(6) As shown in the illustration, measure down from the front corner of the rear roof section to the top of the cross-car straight edge (Dimension A), record measurement. Repeat for other side (Dimension B).
(7) Measure the height of both straight edges, (Dimension C), add Dimension C to Dimension A and then B (Dimension D).

Standard value: 308.43 mm + 2 mm - 1 mm (12.14 in. + 0.08 in. - 0.04 in.)

- If A + C and B + C dimensions are within the Standard value (Dimension D), the hardtop does not require adjustment.
- If A + C and B + C dimensions are not within the Standard value (Dimension D), go to Step 11.

11. Adjust
    Adjustment points

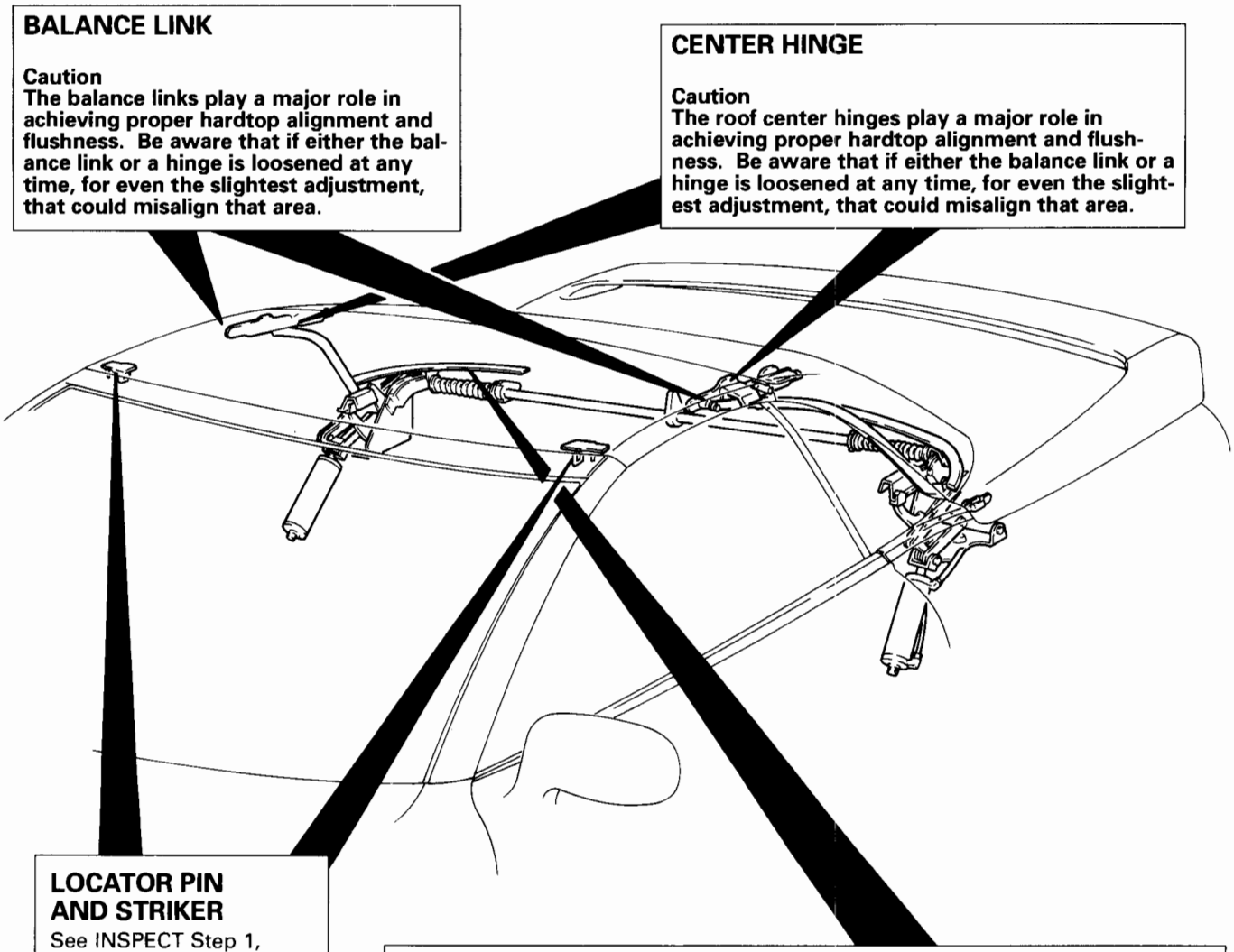

BALANCE LINK

Caution
The balance links play a major role in achieving proper hardtop alignment and flushness. Be aware that if either the balance link or a hinge is loosened at any time, for even the slightest adjustment, that could misalign that area.

CENTER HINGE

Caution
The roof center hinges play a major role in achieving proper hardtop alignment and flushness. Be aware that if either the balance link or a hinge is loosened at any time, for even the slightest adjustment, that could misalign that area.

LOCATOR PIN AND STRIKER
See INSPECT Step 1, in this section.

REAR HINGE

Caution
Adjustment should be performed at this location only when all INSPECTION and ADJUSTMENT procedures have proven unsuccessful. If any adjustment is made at this location it will be necessary to INSPECT AND READJUST the entire retractable hardtop system, including the hard tonneau.

RETRACTABLE HARDTOP DOWN STOP

Caution

The hardtop down stop can be adjusted vertically on its two-piece mounting bracket. The bracket can be adjusted horizontally without affecting down stop height.

Mechanical adjustment to, or replacement of, the retractable hardtop system components will require that the hardtop ECU be run through "auto-configuration" using the ASC INCORPORATED computerized diagnostic system. DO NOT perform any adjustment or replacement without having the latest version of the ASC INCORPORATED diagnostic system.

1. Verify that the retractable hardtop is adjusted properly when in the closed position (refer to RETRACTABLE HARDTOP ASSEMBLY, in this section).
2. Open the hardtop using the hardtop "OPEN" switch. Release the switch before the hard tonneau begins to close.

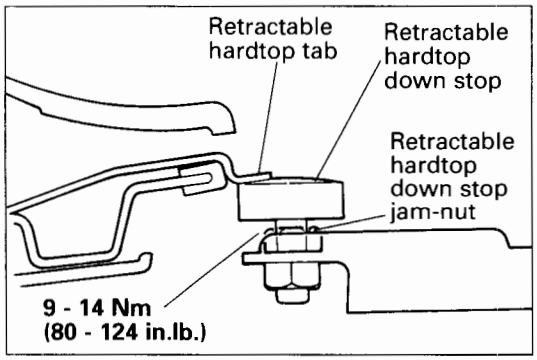

3. Check alignment of hardtop-mounted tab to hardtop down stop.

   Standard Value: Tab resting on down stop bumper and centered side-to-side forward on bumper. Continue to Step 4.

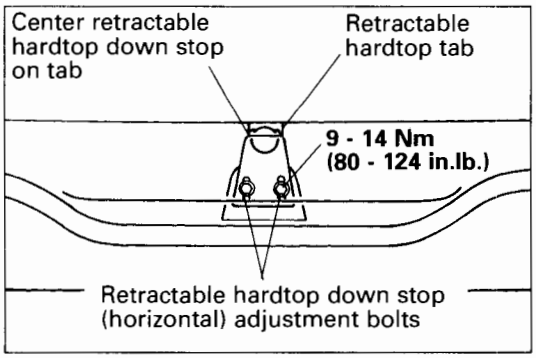

4. Adjust down stop side-to-side to hardtop tab.
   (1) Loosen bracket bolts and adjust down stop to the Standard Value in Step 3. Tighten bracket bolts.

   Standard Value: 9 - 14 Nm (80 - 124 in.lb.)

5. **DOWNSTOP HEIGHT ADJUSTMENT**
   1. Close and latch the hardtop.
   2. Open the hard tonneau.
   3. Make sure object-in-trunk sensor is properly positioned.
   4. Loosen the hardtop down stop jam-nut.
   5. Measure from the top of the object-in-trunk sensor carpet to the top of the hardtop down stop.
   6. Adjust to 38 mm ± 2 mm (1.3 inch ± .08 inch).
   7. Tighten the hardtop downstop jam-nut.

   Standard value: 9 - 14 Nm (80 - 124 in.lb.)

   8. Check and adjust downstop lock. Refer to DOWNSTOP LOCK ADJUSTMENT in this section.
   9. Run the hardtop ECU through Auto-configuration.

DOWNSTOP LOCK ADJUSTMENT

1. Verify that the hardtop down stop is adjusted properly, refer to Retractable hardtop down stop, in this section.
2. Close the retractable hardtop.
3. Open the hard tonneau.

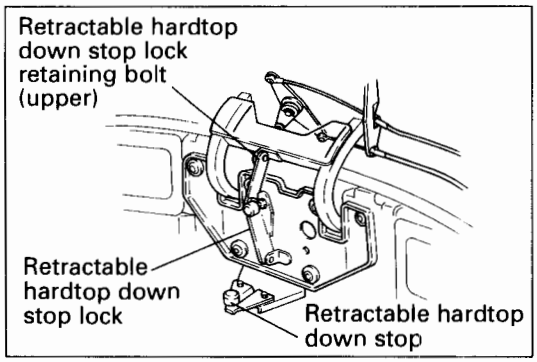

4. Remove the upper hardtop down stop lock retaining bolt.
5. Lower the hardtop down stop lock against the down stop.
6. Loosen the hardtop downstop lock jam-nuts and align the hardtop downstop lock to the hardtop downstop. Tighten jam-nuts and mark the location of the jam-nuts.

   Standard value: 9 - 14 Nm (80 - 124 in.lb.)

7. Install the hardtop downstop lock retaining bolt. Tighten the hardtop downstop lock retaining bolt.

   Standard value: 9 - 14 Nm (80 - 124 in.lb.)

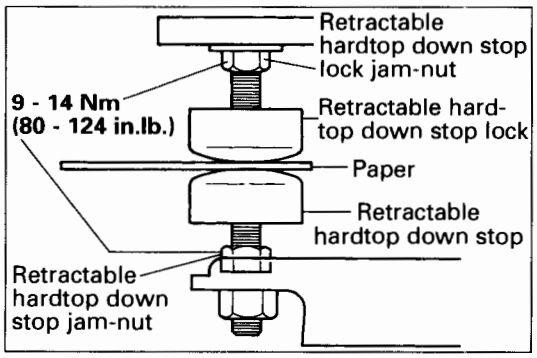

8. Lower both rear seatbacks.
9. Place a sheet of paper on top of the hardtop downstop.
10. Close the hard tonneau.
11. Reaching in through the rear seatback area, pull the paper from between the hardtop down stop and the hardtop down stop lock. There should be a drag on the paper.
12. Adjust hardtop down stop lock as necessary to attain proper gap.
13. Make sure hardtop down stop lock is aligned with the mark, to ensure proper alignment with hardtop down-stop.
14. Run the hardtop ECU through Auto-configuration.

WINDSHIELD HEADER POWER LATCH SYSTEM

Caution
Mechanical adjustment to, or replacement of, the header latch system components will require that the hardtop ECU be run through "auto-configuration" using the ASC INCORPORATED computerized diagnostic system. DO NOT perform any adjustment or replacement without having the latest version of the ASC INCORPORATED diagnostic system.

LATCH ACTUATOR ADJUSTMENT

1. Check that the hardtop assembly is adjusted correctly (refer to SERVICE ADJUSTMENT PROCEDURES - RETRACTABLE HARDTOP ASSEMBLY in this section).

   NOTE
   The hardtop locator pins determine the flushness of the hardtop to the windshield header, and must be adjusted correctly before proceeding. (Refer to RETRACTABLE HARDTOP ASSEMBLY - in this section).

2. Open the hardtop using the hardtop control switch.

   NOTE
   If the hardtop cannot be opened using the hardtop control switch, it will be necessary to open the hardtop manually. Refer to Manual Operation - Retractable Hardtop - Opening Retractable Hardtop in GROUP-00 in this manual.

3. Remove the windshield header garnish. (Refer to GROUP 52, in this Manual).
4. Loosen the actuator jam-nuts on LH and RH actuators.
5. Release LH and RH actuator retaining clips and remove both actuators from the latches.
6. Move the latches to the full open (outboard) position.
7. Adjust both actuators a few turns at a time until they line up with the holes in the latches.
8. Reconnect the actuators in the latches and secure with clips.
9. Tighten the jam-nuts.

   Standard value: 6 - 8 Nm (54 - 71 in.lb.)

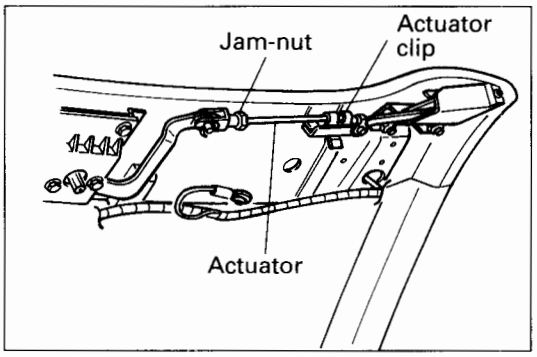

10. Operate the hardtop 2 or 3 cycles to verify proper operation.
11. Reinstall windshield header garnish.
12. Run hardtop ECU through Auto-configuration, refer to Diagnostics and Testing in this section.

LATCH HEIGHT ADJUSTMENT

1. Check that the hardtop assembly is adjusted correctly. Refer to SERVICE ADJUSTMENT PROCEDURES - RETRACTABLE HARDTOP ASSEMBLY, in this section.
2. Open the hardtop using the hardtop control switch.

   NOTE
   If the hardtop cannot be opened using the hardtop control switch, it will be necessary to open the hardtop manually. Refer to Manual Operation - Retractable Hardtop - Opening Retractable Hardtop in GROUP-00 in this manual.

   NOTE
   The hardtop locator pins determine the flushness of the hardtop to the windshield header, and must be adjusted correctly before proceeding. (Refer to ADJUSTMENT OF THE RETRACTABLE HARDTOP SYSTEM, in this section).

3. Remove the windshield header garnish. (Refer to GROUP 52, in this manual).
4. Manually close the header latches.

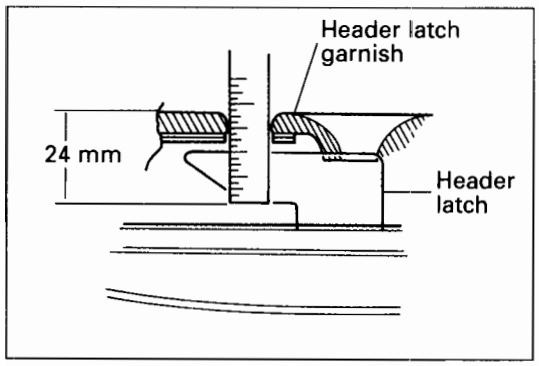

5. Measure the distance from the bottom of the latch to the top of the header latch garnish.

   Standard value: 24 ± 1mm (.944 ± .04 inch)

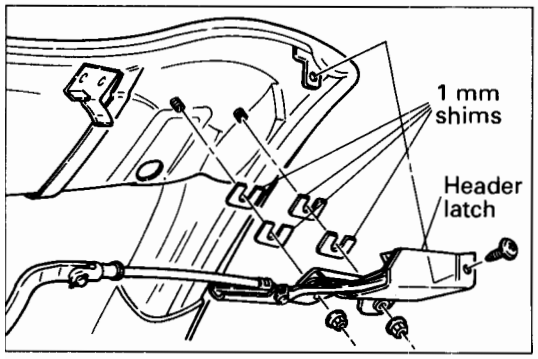

6. Install or remove 1mm (.04 inch) shims between the latch and the header structure to achieve desired dimension.

   NOTE
   If desired dimensions cannot be achieved, inspect latch and header latch garnish and service as required.

POWER QUARTER WINDOW

Caution
Mechanical adjustments to, or replacement of, the quarter window system components will require that the hardtop ECU be run through "auto-configuration"using the ASC INCORPORATED computerized diagnostic system. DO NOT perform any adjustment or replacement without having the latest version of the ASC INCORPORATED diagnostic system.

Caution
Mechanical adjustment to, or replacement of, the quarter window system components will require that the retractable quarter window extend and retract sensors be adjusted.

Description

The power quarter windows are housed in the hardtop rear roof section. The quarter windows are driven by a single electric motor that is controlled only by the hardtop system ECU. No switch is provided to operate the quarter windows independently of the hardtop system.

Unlike conventional quarter windows that lower into the body cavity, a pivot at the top of each window allows the glass to retract into the hardtop toward the rear window.

Each window has two plastic guides mounted on the body structure. These guides maintain the proper door glass-to-quarter window sash seal contact. When the hardtop and/or quarter window is not adjusted properly the windows may bind on the guides, causing the hardtop ECU to sense stall current which turns off the motor. The drive motor is also controlled through the ECU by time, or by the position sensors, whichever comes first.

Each window has a spirally wound drive cable that functions as a flexible, rack-like gear. The cable's spiral winding functions similar to teeth on a rigid rack-type gear. The helical gear on the drive motor meshes with the cable's "teeth", driving the cable in or out depending on gear (motor) rotation.

Quarter window opened and closed positions are sensed by two position sensors located on the right-hand quarter window cable return tube. The sensor nearest the drive motor senses the fully-closed (extended) position. The other sensor senses the fully-open (retracted) position. The position sensor consists of an adjustable position, reed-type switch that is saddle-mounted around the cable return tube. The sensors are tripped by a small magnet on the end of the right-hand drive cable. The ECU cannot determine what position the windows are in if they are neither fully open or fully closed.

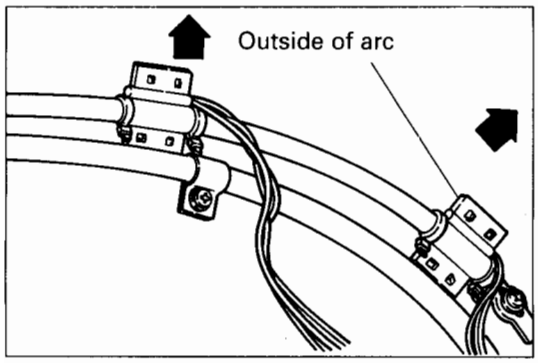

The fully-closed position sensor performs the function of an electronic down-stop; no hard down stop is used.

For optimal performance the sensor should be located on the outside arc of the cable return tube. This will ensure the magnet will be in closer proximity to the sensor than if it was on the inside arc of the tube.

Caution
The positions of quarter window position sensors are critical for proper operation of not only the quarter window system but the hardtop system as a whole. Damage can occur to the quarter windows, hardtop, and hard tonneau if the position sensors are not properly adjusted. Personal injury could result.

SYNCHRONIZATION OF QUARTER WINDOW CABLES

NOTE
(1) Whenever one quarter window is serviced, the other should be inspected for alignment, wear, or breakage, especially when the drive cables are suspect.
(2) Whenever the quarter window drive motor is removed and replaced the quarter windows must be synchronized.
(3) Synchronization should only be performed on a quarter window system that is known to be in good working order.

1. Open the retractable hardtop halfway.
2. Remove the headlining from the rear roof section. (Refer to GROUP 52, in this Manual.)
3. Remove the quarter window drive motor.
   (1) Disconnect the harness connector.
   (2) Remove the bolts securing the motor, and remove the motor.

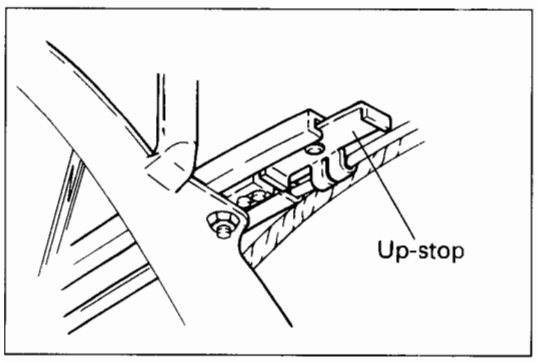

4. Manually push (retract) both quarter windows into the hardtop until they contact the up-stops as shown in the illustration.
5. Reinstall and reconnect the quarter window drive motor.

   Standard value: 2 - 5 Nm (18 - 44 in.lb.)

   NOTE
   Do not disturb the cables as the drive gear meshes with them. Otherwise the synchronization will be off by one or more "teeth" on the cable, which will cause the windows not to open or close at their original adjusted position.

6. Re-install the headlining (see GROUP 52, in this Manual).

QUARTER WINDOW ADJUSTMENT

NOTE
In order for the quarter windows to operate properly, the hardtop MUST be properly adjusted to the vehicle body, and the door glass properly adjusted to the hardtop. Otherwise, the quarter windows may bind in the quarter glass guides located on the body. This will cause poor door glass-to-sash seal contact and/or inconsistent or unrepeatable closing of the windows.

Caution
DO NOT attempt to adjust the quarter windows unless you are sure the hardtop is adjusted properly. If the hardtop is not adjusted properly and the quarter windows are adjusted to conform to the maladjusted hardtop, the door glass will not be in the correct position to the A-pillar and hardtop weatherstrips. Damage to the hardtop weatherstrips may occur,water leaks and possibly wind noise may develop.

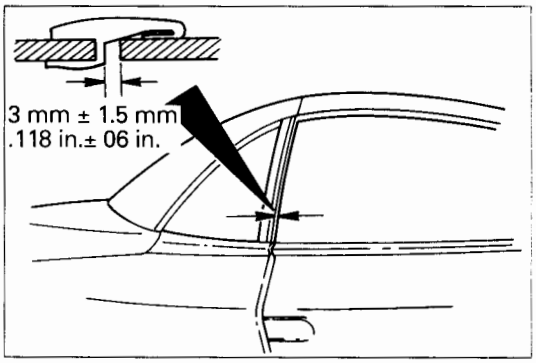

INSPECT

1. Close and latch the hardtop, and close both vehicle doors with the door windows fully up.
2. Inspect the gap between the sash seal and the door glass rear edge.

   Standard value: Constant 3 mm ± 1.5 mm (.118 in. ± 0.6 in.) gap between door glass edge and sash seal

   - If gap is within the standard value, go to Step 5.
   - If gap is not good, go to Step 4.

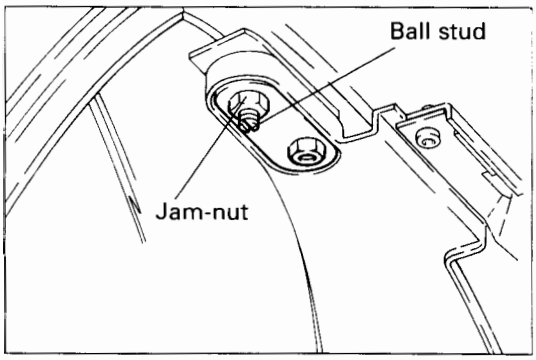

4. Adjust the door glass-to-sash seal gap.

   Top of window:

   (1) Remove the headlining from the rear roof section. Refer to Group 52, in this Manual.
   (2) Use a screwdriver to hold the ball stud (DO NOT rotate stud), and loosen the ball stud jam-nut.
   (3) Loosen the ball stud tapping plate nut.
   (4) Slide the window fore or aft to the Standard value in Step 3.

(5) Tighten the nut, and hold the ball stud and tighten the jam-nut.

Standard value: 2.8 - 4.2 Nm (25 - 37 in.lb.)

(6) Close the vehicle doors. Using the hardtop "CLOSE"/-"OPEN" switch, open the windows partway, and then fully close them.
(7) Inspect the gap.

- If the gap is within the standard value, go to Step 5.
- If the gap is not OK, go to **Bottom of window**, in this Step 4.

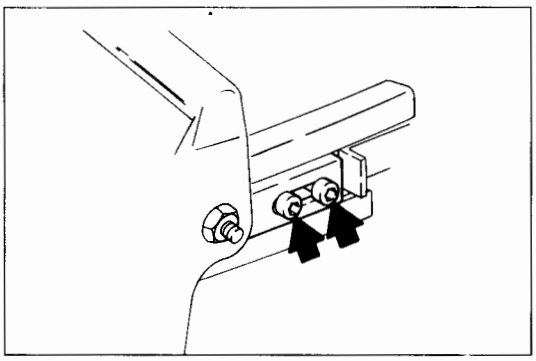

Bottom of window:

NOTE
If there is no more mechanical adjustment available to extend the quarter windows, it may be necessary to adjust the quarter window extend position sensor.

(1) Loosen the bolts holding the swivel to the drive cable.
(2) Manually pull/push the glass closed to achieve the desired gap.
(3) Tighten the bolts.

Standard value: 6 - 8 Nm (53 - 71 in.lb.)

(4) Close the vehicle doors. Using the hardtop "CLOSE"/-"OPEN" switch, open the windows partway, and then fully close them.
(5) Inspect the gap.

NOTE
Gap adjustments to one window will usually change the gap of the other window. Always check the other window after making gap adjustments.

- If the adjustments did not yield the desired result, repeat the above.
- If the gap is OK, go to Step 5.

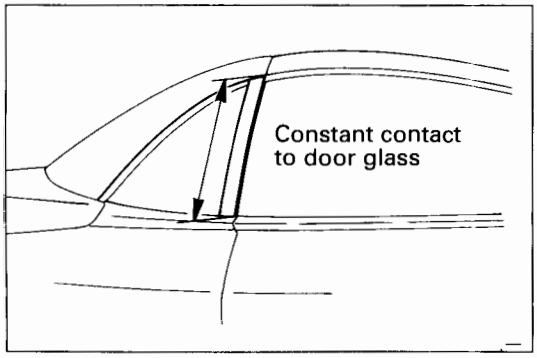

5. Inspect the contact of the sash seal to the door glass.
   (1) Close and latch the hardtop, and close both vehicle doors.
   (2) Inspect the contact of the sash seal to the door glass.

   Standard value: Constant contact of door glass to sash seal

   - If contact is good, go to ADJUSTMENT OF QUARTER WINDOW GUIDING SYSTEM (RUDDER), in this section.

- If contact is not good, go to Step 6.

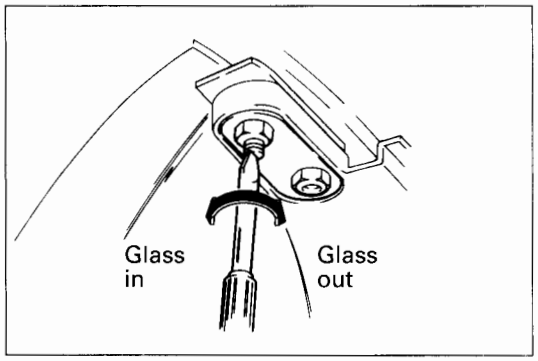

6. Adjust the door glass-to-sash seal contact.

Top of window:

(1) Use a screwdriver to hold the ball stud, loosen the ball stud jam-nut.
(2) Adjust the window to the Standard value in Step 4 by rotating the ball stud.

Standard value: In = Counterclockwise
Out = Clockwise

(3) Close the vehicle doors. Using the hardtop "CLOSE"/"OPEN" switch, open the windows partway, and then fully close them.
(4) Inspect the contact.

- If contact is good, tighten the ball stud jam-nut, go to ADJUSTMENT OF QUARTER WINDOW GUIDING SYSTEM (RUDDER), in this section.
- If contact is not good, go to **Bottom of window** in this Step.

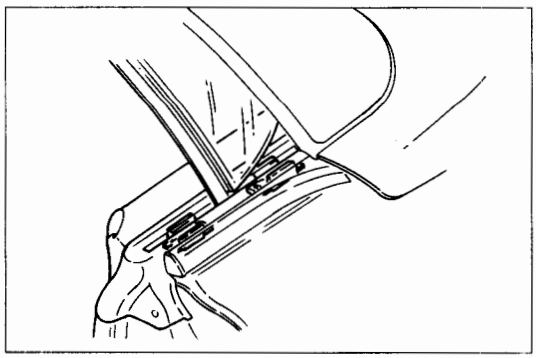

Bottom of window:

(1) Loosen the quarter window guides to adjust the window to the Standard value in Step 4.
(2) Tighten quarter window guide nuts.

Standard value: 2.8 - 4.2 Nm (25 - 37 in.lb.)

(3) Close the vehicle doors. Using the hardtop "CLOSE"/"OPEN" switch, open the windows partway, and then fully close them.
(4) Inspect the contact.
(5) Go to ADJUSTMENT OF QUARTER WINDOW GUIDING SYSTEM (RUDDER), in this section.

ADJUSTMENT OF QUARTER WINDOW GUIDING SYSTEM (RUDDER)

NOTE
A rudder-like arm attached to the rear of the window steers the window along a slide (cam) while the quarter windows

open and close. The "rudder" steers the window into the quarter window guides, located on the vehicle body, as they close.
When the rudder system is not adjusted properly the window may contact the quarter belt molding causing scuffing or damage.
The rudder does not directly affect adjustment of the quarter window system in general, but will provide optimum operational performance.

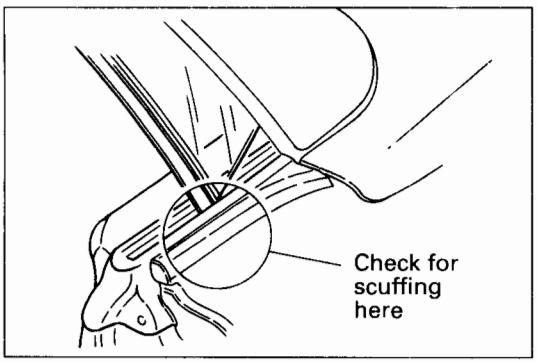

INSPECT

NOTE
The quarter window system must be adjusted properly before attempting to adjust the rudder system.

1. Inspect the quarter belt mouldings for scuffing or damage.
   - If damage is noted, go to Step 2.
   - If damage is not noted, go to Step 3.

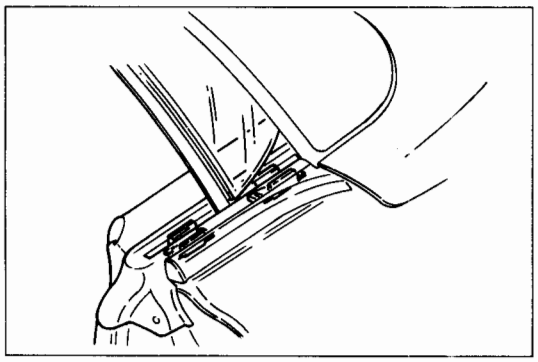

2. Inspect the operation of the window rudder system.
   (1) Close and latch the hardtop.
   (2) Open the vehicle doors. Using the hardtop "CLOSE"/"OPEN" switch, fully open and close the windows several times noting the relationship of motion of the quarter window into the quarter window guides located on the vehicle body.

   Standard value:
   - **Windows do not tend to ride close to the quarter belt mouldings.**
   - **The motion of the windows into the quarter window guides is smooth.**

   - If the motion is acceptable according to the Standard value, the procedure is complete; check other areas of the quarter window system for problems if a problem still exists.
   - If the motion is not OK according to the Standard value, remove all the rear headlining (refer to GROUP 52, in this Manual), and go to Step 3.

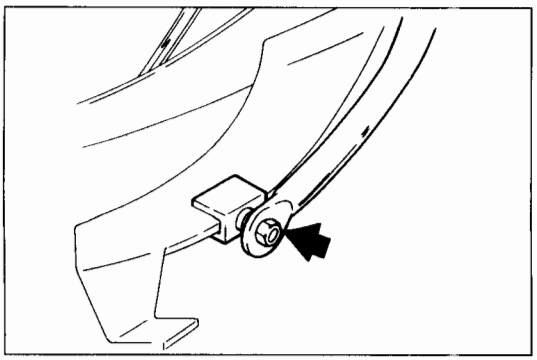

3. Adjust the quarter window rudder system.
   (1) Open the windows using the hardtop "OPEN" switch.
   (2) Loosen the nut on the yoke swivel holding the window rudder.

(3) Close the hardtop. As the quarter windows are closing, release the switch just before they contact the quarter belt moulding and the quarter window guides.
(4) Tighten the yoke swivel nut.

Standard value: 2.8 - 4.2 Nm (25 - 37 in.lb.)

(5) Open and close the windows several times to check for proper operation.
(6) Go to ADJUSTMENT OF QUARTER WINDOW POSITION SENSORS, in this section.

ADJUSTMENT OF QUARTER WINDOW POSITION SENSORS

Caution
Mechanical adjustments to, or replacement of, the quarter window position sensors will require that the hardtop ECU be run through "auto-configuration" using the ASC INCORPORATED computerized diagnostic system. DO NOT perform any adjustment or replacement without having the latest version of the ASC INCORPORATED diagnostic system.

Description

Quarter window open and close positions are sensed by two position sensors located on the right-hand quarter window cable return tube (left hand side of the vehicle). The sensor nearest the drive motor senses the fully-closed (extended) position. The other sensor senses the fully-open (retracted) position. The position sensor consists of an adjustable position, reed-type switch that is saddle-mounted around the cable return tube. The sensors are tripped by a small magnet on the end of the right-hand drive cable. The ECU cannot determine what position the windows are in if they are neither fully-open or fully closed.

The fully-closed position sensor performs the function of an electronic down stop; no hard down stop is used.

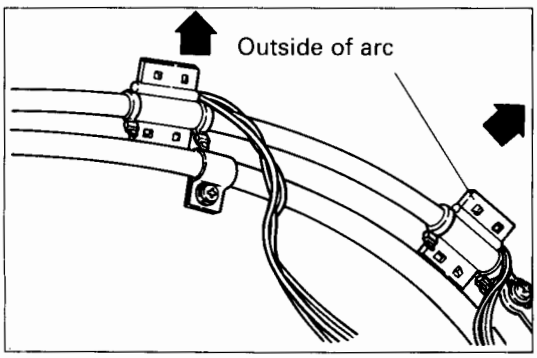

For optimal performance the sensors should be located on the outside arc of the cable return tube. This will ensure the magnet will be in closer proximity to the sensor than if it was on the inside arc of the tube.

Caution
The positions of quarter window position sensors are critical for proper operation of not only the quarter window system but the hardtop system as a whole. Damage can occur to the quarter windows, hardtop, and hard tonneau if the position sensors are not properly adjusted. Personal injury could result.

NOTE
This procedure should be performed for both position sensors.

1. Remove rear headlining (refer to GROUP 52, in this Manual).
2. Using the hardtop "OPEN" switch, open the quarter windows.
3. Disconnect the retract position sensor harness connector.

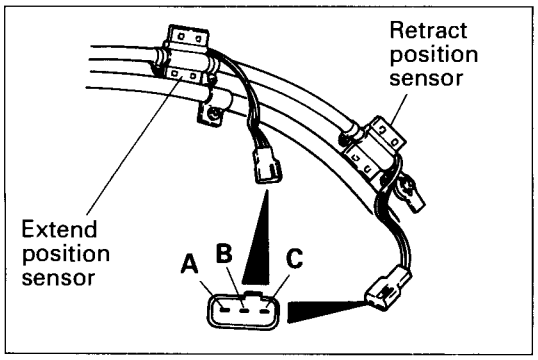

4. Check and set the position of the sensor.

Standard value:

Retract Position Sensor Measured terminal	With quarter window extended (closed)	With quarter window retracted (open)
B and C	No continuity	Continuity
A and B	Continuity	No continuity

Extend Position Sensor Measured terminal	With quarter window extended (closed)	With quarter window retracted (open)
B and C	Continuity	No continuity
A and B	No continuity	Continuity

5. Reconnect the retract position sensor.
6. Using the hardtop "CLOSE" switch, close the quarter windows.
7. Disconnect the extend position sensor.
8. Check and set the position of the sensor.
9. Reconnect the extend position sensor.
10. Check operation of the quarter windows by cycling the hardtop several times.
11. Reinstall the headlining (refer to GROUP 52, in this Manual.)

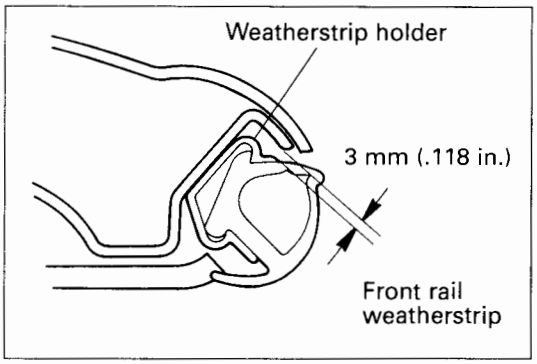

FRONT RAIL WEATHERSTRIP AND HOLDER

1. Open the hardtop halfway.
2. Measure the distance between the weatherstrip holder and the underside of the hardtop as shown in the illustration.

   Standard value: 3 mm (.118 in.) between holder and hardtop

   - If the holder is not at the Standard value:
     (1) Remove the weatherstrip from the holder.
     (2) Loosen the holder attaching screws, adjust the holder to the Standard value and tighten screws.
     (3) Reinstall the weatherstrip.
     (4) Go to Step 3.

   - If the holder is at the Standard value, go to Step 3.

3. Close the hardtop.
4. Adjust the front rail weatherstrip to the windshield header weatherstrip and the hardtop weatherstrip by sliding it in the holder.

   Standard value: Equal compression to the header weatherstrip and hardtop weatherstrip.

5. Open the hardtop halfway, close it, and recheck weatherstrip compression in Step 4.

HARD TONNEAU

• TONNEAU HINGE
• TONNEAU LATCH SYSTEM

Caution

Mechanical adjustments to, or replacement of, certain components of the hard tonneau system, including tonneau weatherstrip and/or hardtop replacement and adjustment will require that the hardtop ECU be run through "auto-configuration" using the ASC INCORPORATED computerized diagnostic system. DO NOT perform any adjustment or replacement without having the latest version of the ASC INCORPORATED diagnostic system.

Description

The rearward-opening tonneau is attached to the vehicle body at the rear by a single center hinge assembly. Hydraulic cylinders actuate lifting arms that are hinged at both sides of the vehicle which open and close the hard tonneau. The lifting arms have plastic guides on the end of them that slide in track assemblies mounted to the underside of the tonneau. The tracks are hinged from their mounting brackets at the rear. The purpose of the hinged tracks is two-fold: it allows the tonneau to be driven into the tonneau latches without damaging the latches and tonneau, and provides the additional travel of the hydraulic cylinders after the tonneau is closed to mechanically pull the tonneau latches closed through a system of levers and cables. Each latch is remotely released by an electric actuator controlled by the hardtop ECU.

If the hardtop system latch system becomes inoperable, the tonneau latches can be unlatched manually by pulling the manual release lever located to the left of the driver seat.

When adjusting one component or area of the hard tonneau, all components relating to hardtop operation should be checked, and readjusted, if necessary.

Within a certain tolerance or range, electronically speaking, even the slightest adjustment, or difference in weatherstrip compression, can affect the electronic data to the ECU. This ultimately affects the overall performance of the hardtop and tonneau system.

ADJUSTMENT OF HARD TONNEAU AND TONNEAU LATCHES

INSPECT

1. Verify that the retractable hardtop is adjusted correctly (refer to SERVICE ADJUSTMENT PROCEDURES in this section). Otherwise, the tonneau may not line up properly with the hardtop in order to achieve the proper gap conditions around the hardtop and the gaps side-to-side between the tonneau and the rear fenders.

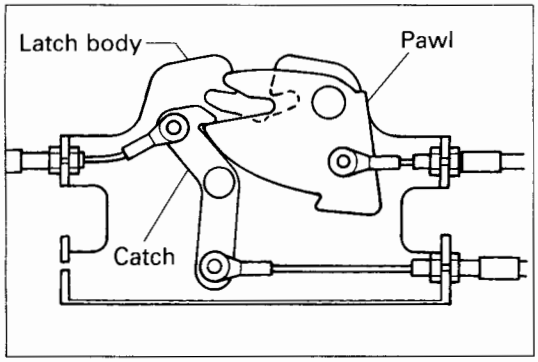

2. Inspect the timing relationships of the striker as the latch pawl draws it down to latch it, and inspect for proper latch pawl catch engagement which will hold the pawl closed and release it when required. If the latch pawl catch does not engage the latch pawl, the tonneau may feel closed and latched, but over time the tonneau cylinders will drift up allowing the latch pawl to open and release the tonneau.

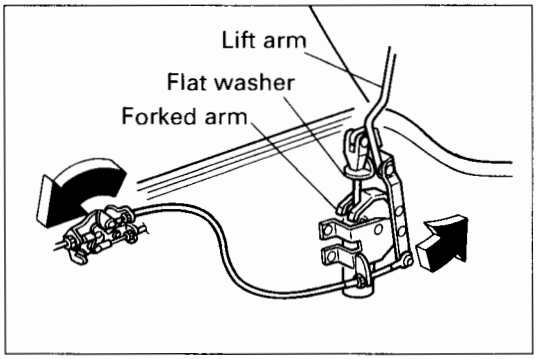

NOTE
For each latch the timing of the latch pawl closing (opening is not as critical) is controlled by the forked arm attached to the lift arm of the tonneau mechanism. This forked arm is actuated by a flat washer located at the top of the hydraulic cylinder rod.

As the cylinder rods retract when closing the tonneau, the tonneau strikers will enter the latches and begin to close the latch pawls. Even though the tonneau has stopped moving the cylinder rods will have just enough travel to pull the latches closed. This is accomplished by the pivoting slide tracks mounted on the tonneau, which allows the cylinders the extra travel they need to have the washers at the clevises bear down on the forked arms. The forked arms have the mechanical leverage to pull the cables which finally draw the pawls to the closed position allowing the pawl catches to engage and secure the pawls closed.

If the forked arms are too high on the lift arm, the pawls will close too soon and may bind on the striker as it closes. In extreme cases the pawls will close before the striker enters it. If the forked arms are too low on the lift arms, the pawls will not have travelled far enough to draw the pawls latched.

Follow the procedure below to inspect the timing of the latch pawl and catch engagement. Open and close the tonneau manually to do this.

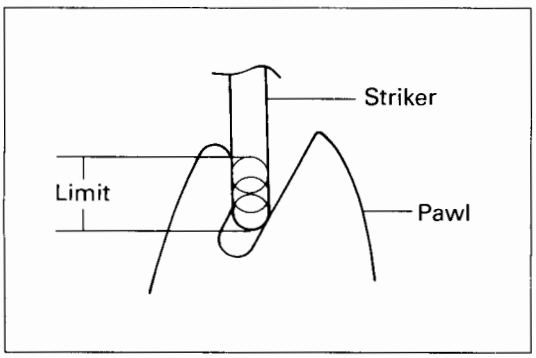

Standard values:

1. **Striker must enter the latch pawl within the limit as shown in the illustration.**
2. **Latch pawl must be secured by the latch catch after the pawl closes.**

The position of the forked arm on the lift arm can be used to get the rough timing of the pawl closing near or within the Standard value. Fine adjustment can be accomplished by adjusting the cables at the latch.

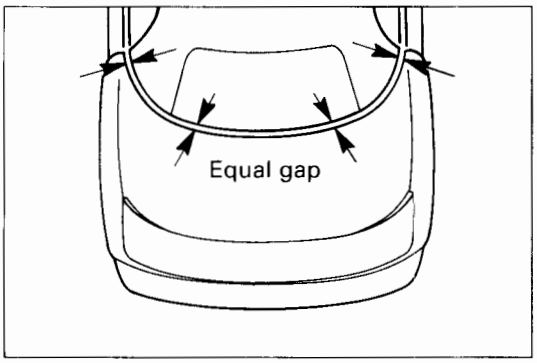

3. Close the hard tonneau using the hardtop or tonneau switch.
4. Inspect the position of the tonneau relative to the rear quarters and the hardtop.
   (1) Inspect the gap between the hardtop and tonneau along the front edge of the tonneau.

   Standard value: Equal gap at forward ends of tonneau and along the rear roof glass

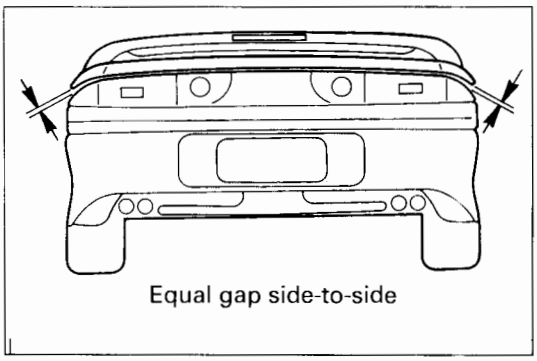

   (2) Inspect the hard tonneau's side-to-side overhang to the rear quarters.

   Standard value: Equal overhang of both sides to the rear quarters

- If the tonneau position is within the Standard value, go to the inspection of the tonneau latches, Step 4.

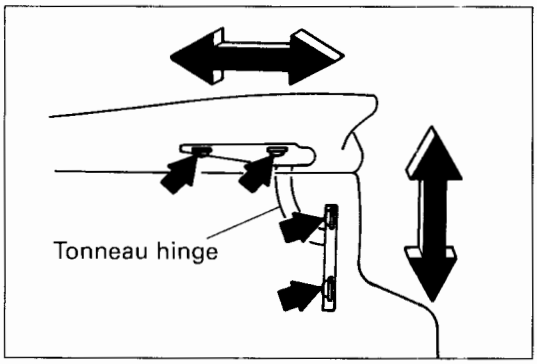

- If the tonneau position is not within the Standard value, adjust the tonneau as shown in the illustration below.

NOTE
1. Do not open and close the tonneau manually while performing tonneau adjustments; use the hardtop or tonneau switches.

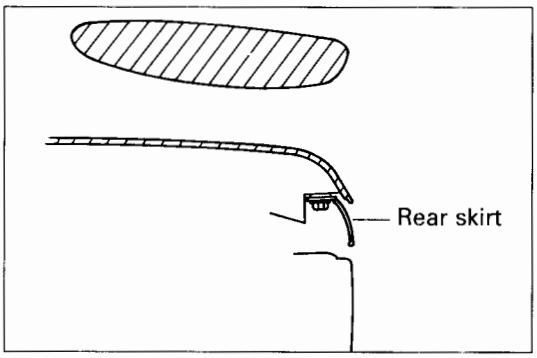

2. Be sure the tonneau rear skirt will not damage the rear combination lights or the upper bumper extensions as the tonneau opens and closes. If it appears the rear skirt will cause damage, loosen the attaching bolts and adjust it out of the way. You will need to adjust the position of the rear skirt after the tonneau has been properly adjusted.

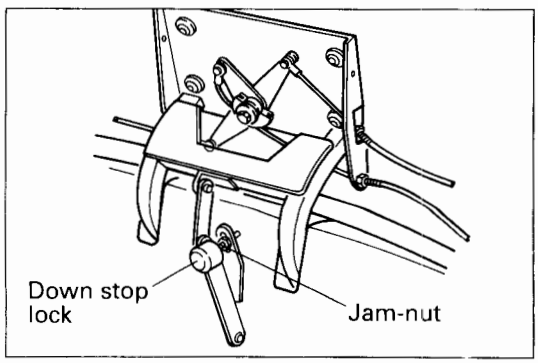

3. With the tonneau open, loosen the hardtop down-stop lock jam-nut, and back-off the hardtop down-stop lock several turns. Otherwise the tonneau may not freely move down. You will have to re-adjust the down stop lock after adjusting the tonneau (refer to SERVICE ADJUSTMENT PROCEDURES, in this section).

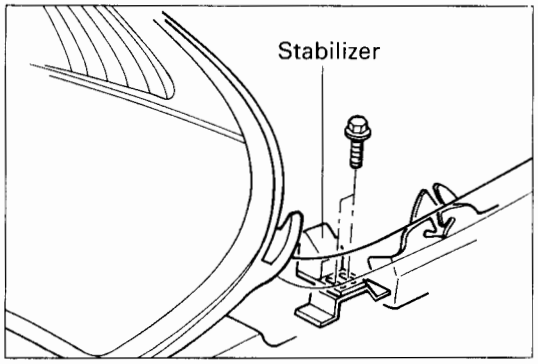

4. Move the LH and RH tonneau stabilizers inboard.
   (1) Detach the LH and RH trunk trim panels.
   (2) Loosen the bolts attaching the LH and RH tonneau stabilizers and move them inboard. This will allow the tonneau to be adjusted side-to-side.

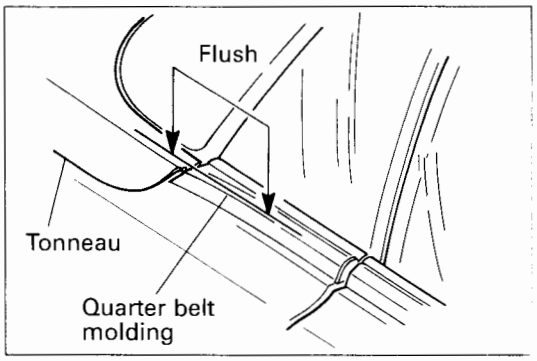

(3) Check the front ends of the tonneau where they meet the quarter belt mouldings.

Standard value: Front ends flush to +3 mm (.118 in.) with quarter belt mouldings

- If the front ends of the tonneau are within the Standard value, and the tonneau latches are working properly the adjustment of tonneau is complete.
- If the flushness of one or both front ends of the tonneau are not within the Standard value, or the flushness is within the Standard value, but one or both latches do not operate properly, go to Step 5.

5. Inspect the tonneau latches for proper centering of the outboard strikers to latch bodies, then the height of the latches which controls flushness of the tonneau to the quarter belt mouldings.
   (1) Open the tonneau manually. Do not return the bypass valve to the POWER position at this time.

Caution
The tonneau may begin to close without warning since the bypass valve is not in the POWER position. Hold the tonneau open while performing the next

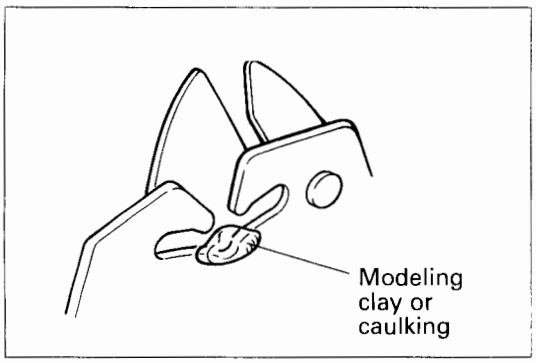

(2) Place a piece of modeling clay, caulking strip, or equivalent, the size of pencil eraser on the latch body as shown in the illustration. This will indicate where the striker is in relation to the latch when the tonneau is closed and latched.

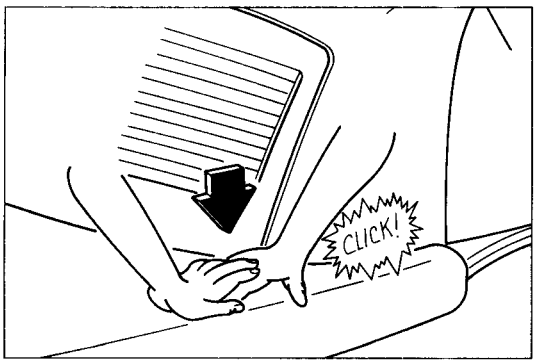

(3) Slowly lower the tonneau to close it. Then latch it, if possible. Using the hand-on-hand method, at the front ends of the tonneau above the latch, push down until you hear it click. Then, pull up on the tonneau to confirm that it has latched. Repeat for the other side.

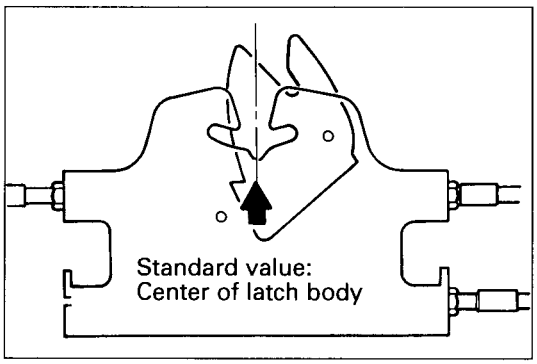

(4) Open the tonneau, and return the bypass valve to the POWER position, or support it.
(5) Inspect the indentation in the clay or caulking where the striker entered the latch.

Standard value: Centered on the latch body as shown in the illustration. The striker should not have penetrated the clay or caulking allowing the striker to contact the latch body.

- If the striker is centered to the latch body, go to Step (6).
- If the striker is not centered to the latch body, adjust the latch by performing the following procedure.

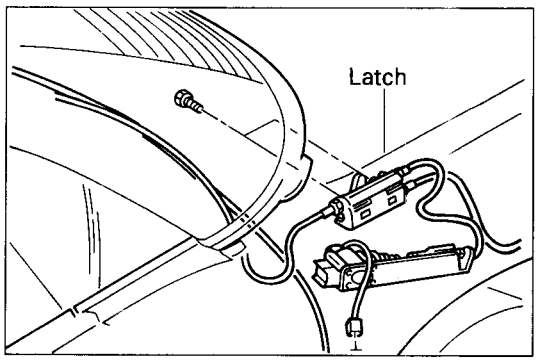

1. Slightly loosen the latch attaching bolts. In small increments, adjust the latch to center it to the striker. Open and close the tonneau manually to do this.
2. Repeat for the other latch if necessary.
3. Tighten the latch attaching bolts.

   Standard value: 9 - 14 Nm (80 - 24 in.lb.)

4. Go to Step (6).

(6) Adjust the height of the latch to attain proper flushness of the front ends of the tonneau to the quarter belt mouldings.

1. Matchmark the latch position on the vehicle structure in order to not lose the centered location of the latch to the striker.
2. Slightly loosen the latch attaching bolts. In small increments, adjust the latch up or down to attain the proper flushness to the quarter belt mouldings. Open and close the tonneau manually to do this.

3. Repeat for the other latch if necessary.
4. Tighten latch attaching bolts.

   Standard value: 9 - 14 Nm (80 - 124 in.lb.)

5. Go to Step 6 below.

6. Verify that the latches are properly adjusted by returning the bypass valve to the POWER position. Then, try operating the tonneau using the switch.

   NOTE
   Most likely, the hardtop ECU will need to be run through Auto-configuration, unless the adjustments that were made cannot be detected by the hardtop ECU. A good indication that the hardtop ECU does require Auto-configuration is when the tonneau was being adjusted the adjustment procedure worked well when it was being latched manually. But now that the tonneau is being closed and latched using the switch the tonneau will not close completely or does not latch at one or both sides. (Refer to Diagnostics and Testing in this section.)

7. Adjust the hardtop down stop lock. Refer to SERVICE ADJUSTMENT PROCEDURES - HARDTOP DOWN STOP LOCK, in this section.

8. With the tonneau closed inspect the tonneau rear skirt.

   Standard value: Flush to the upper bumper extensions with equal gap side-to-side

9. Tighten the rear skirt attaching bolts.

   Standard value: 2.8 - 4.2 Nm (25 - 37 in.lb.)

10. Adjust the LH and RH tonneau stabilizers.

    (1) Open the tonneau.
    (2) Move the stabilizers outboard until they stop.

    NOTE
    The stabilizers should be free to slide inboard when the tonneau closes.

    (3) Close then open the tonneau using the switch.
    (4) The stabilizers should be approximately where they need to be, but will need to be squared up with the stabilizer brackets on the tonneau. When they contact each other, they should have roughly a square-shaped contact patch. To determine the contact patch, apply or spray a witness-compound (such as machinists bluing or white leak detector spray) on the stabilizer or the stabilizer bracket. Close the tonneau, then open it to determine the contact patch. Adjust

the stabilizer, as required, to attain the proper contact patch.

(5) Tighten the stabilizer attaching bolts.

Standard value: 9 - 14 Nm (80 - 124 in.lb.)

11. Reattach the LH and RH trunk trim panels.

HARD TONNEAU

• TONNEAU LATCH MANUAL RELEASE SYSTEM

Description

The tonneau latch manual release cable (formerly remote rear hatch release for the coupe) runs from the left side of the drivers seat, through the body structure and across the vehicle to the passenger side. There it connects to a junction box, which splits the pulling force to the two latches by cables.

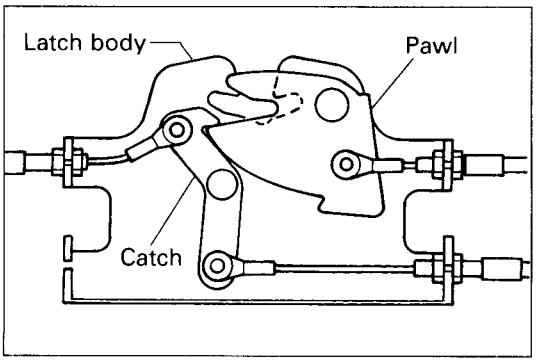

ADJUSTMENT OF HARD TONNEAU MANUAL RELEASE SYSTEM

INSPECT

1. Open the tonneau using the switch or manually (refer to GROUP 00, in this Manual).
2. Manually latch the latch pawl for the LH and RH latches.
3. Pull the tonneau manual release lever located to the left of the driver seat. When the lever is pulled listen for the latches to release within a fraction of a second of each other.

   - If the latches release within a fraction of a second of each other, the manual release system is working properly.
   - If the latches do not release within a fraction of a second of each other, the manual release system requires adjustment. Go to Step 4.

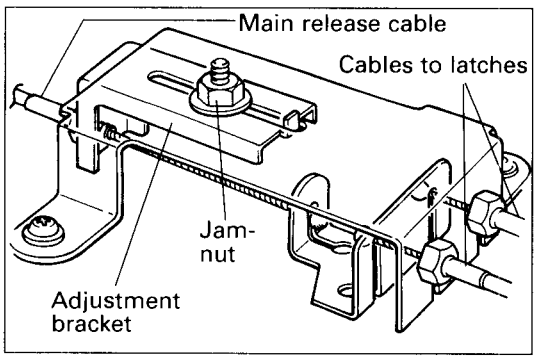

4. Detach the RH trunk trim panel (refer to GROUP 52, in this Manual).
5. Loosen the jam-nut at the manual release cable junction box.
6. Pull the bracket holding the main manual release cable rearward and remove any slack at the cables that go to the latches, and tighten the jam-nut.

   Standard value: 2 Nm (18 in.lb.)

7. Repeat Steps 2 and 3.

   - If the latches still don't release within a fraction of a second of each other, the system can be fine tuned by adjusting the cables at the latches.

8. Reattach the RH trunk trim panel.

ADJUSTMENT OF HARD TONNEAU FLIPPER DOORS

INSPECT

1. Verify that the retractable hardtop and tonneau are adjusted correctly (refer to SERVICE ADJUSTMENT PROCEDURES in this section).
2. Fully open the hardtop using the switch.
3. Verify that the interior trim is adjusted correctly (refer to SERVICE ADJUSTMENT PROCEDURES, GROUP 52, in this Manual).
4. Close the hard tonneau using the hardtop or tonneau switch.

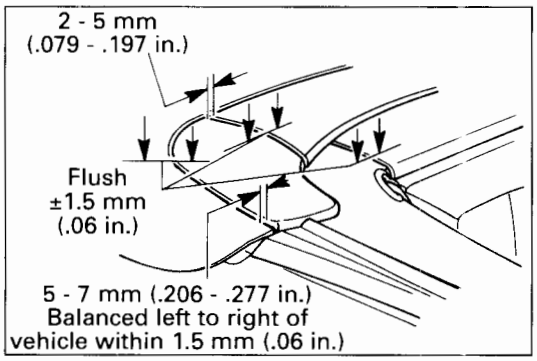

5. Inspect as shown in the illustration:
   (1) The gap between the quarter trim panels and the bottom of the flipper doors.
   (2) The gap between the rear shelf panel and the flipper doors.
   (3) The gap between the flipper doors and the tonneau.

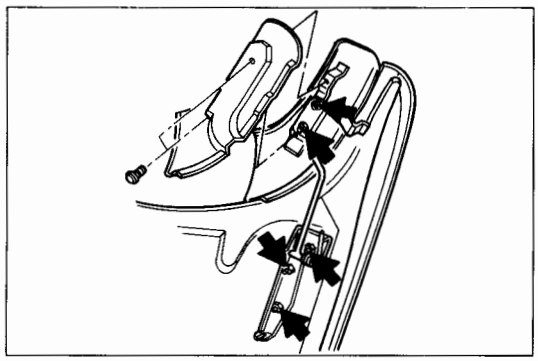

- If adjustment is required, open the tonneau and make the adjustments at the points on the flipper door assembly, and/or the body structure as required, as shown in the illustration.
- If adjustment is not required go to Step 6.

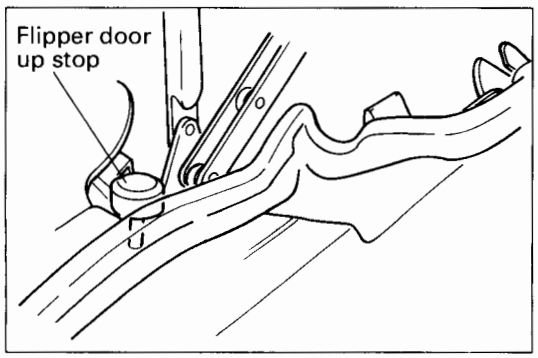

6. Open the tonneau and check that both flipper doors are retracted within the Standard value.

   NOTE
   The hardtop must be closed and latched.

   Standard value: 155 mm ± 3 mm (6.102 in. ± .118 in.) measured from the underside end of the flipper door to the inside surface of the tonneau

   - If the flipper doors are within the Standard value, the flipper doors do not require adjustment.
   - If one or both flipper doors are not within the Standard value, adjustment is required. Make adjustments where the cables attach to the flipper door hinge and/or at the tonneau hinge.

   NOTE
   Each time an adjustment is made to the flipper doors, the hardtop (and tonneau) should be cycled which will retract and extend the flipper doors. Opening and closing the tonneau only will not operate the flipper doors.

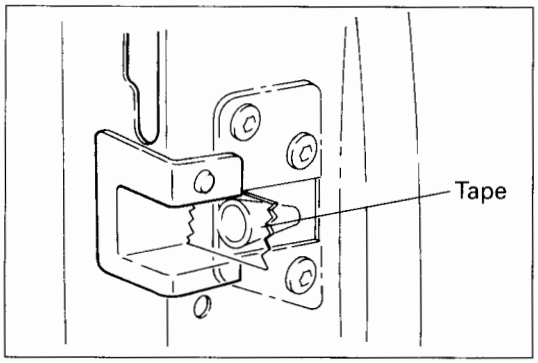

DOOR LOCATING PIN

1. Check the centering of the pin to the receiver.
   (1) Wipe clean the receiver mouth.
   (2) Apply a piece of masking tape to the receiver mouth.

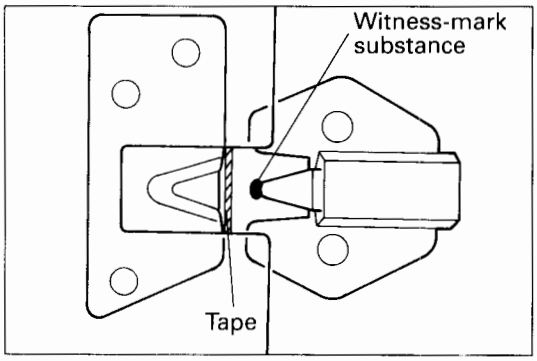

   (3) Apply a small dab of grease, paint, or other substance to the tip of the locating pin. This will leave a witness-mark on the tape.
   (4) Carefully close the door until the pin slightly contacts the tape, leaving a witness-mark. Do not puncture, or push the tape into the receiver.

   - If the witness-mark is in the center of the receiver mouth, in-line adjustment is good. Go to Step 4.
   - If the witness-mark is off-center, go to Step 2.

2. Adjust the locating pin to center it to the receiver. Use shims (available as a service part) to adjust the pin assembly forward (toward the front of the vehicle) and/or by moving the locating pin assembly up or down.

   Standard value: Locating pin centered to, and in-line with, the receiver mouth

3. Repeat Steps 1 and 2 until alignment is at the standard value. Remove the tape from receiver.

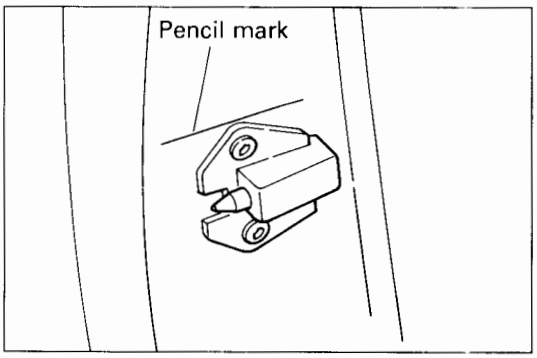

4. Adjust the locating pin inboard or outboard.
   (1) Using a sharp pencil, mark the horizontal location of the locating pin assembly on the vehicle body.
   (2) Loosen the locating pin attaching bolts enough to allow the assembly to be pushed inboard when the door closes (the locating pin is spring-loaded and will "give" somewhat). Move the pin assembly to the outboard-most location, while maintaining horizontal alignment with the pencil marks.
   (3) Gently close the door, allowing the locating pin assembly to move inboard. Open the door and check that the locating pin is still aligned horizontally.
   (4) Move the receiver outboard 3 mm ± 1 mm (.118 in. ± .04 in.).
   (5) Tighten the locating pin attaching bolts.

   Standard Value: 9 - 12 Nm (80 - 106 in.lb.)

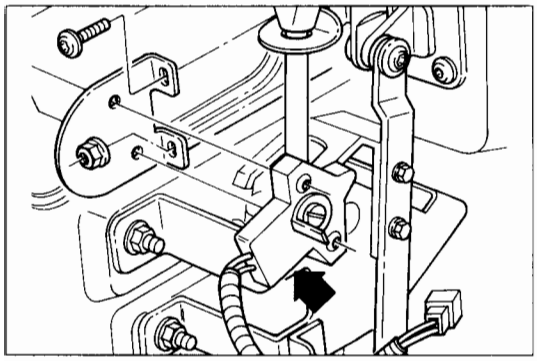

HARD TONNEAU POSITION SENSOR (POTENTIOMETER)

1. Caution
   This part is not adjustable mechanically. It must not be disturbed at any time whether or not the hardtop or hard tonneau is in operation. Any rotational movement of ± 1 mm (.04 in.) may upset hardtop operation. If the sensor is disturbed, you must run the hardtop ECU through Auto-configuration using the latest version of the ASC INCORPORATED diagnostic system (refer to Diagnostics and Testing in this section).

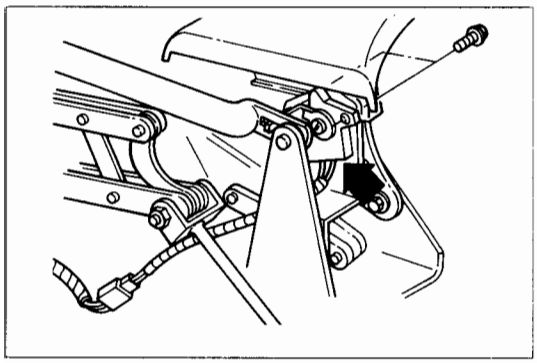

RETRACTABLE HARDTOP POSITION SENSOR (POTENTIOMETER)

1. Caution
   This part is not adjustable mechanically. It must not be disturbed at any time whether or not the hardtop or hard tonneau is in operation. Any rotational movement of ± 1 mm (.04 in.) may upset hardtop operation. If the sensor is disturbed, you must run the hardtop ECU through Auto-configuration using the latest version of the ASC INCORPORATED diagnostic system (refer to Diagnostics and Testing in this section).

HARD TONNEAU

REMOVAL AND INSTALLATION

CAUTION:
Adjustment or replacement of this component requires that the hard-top ECU be run through Auto-configuration (Refer to Diagnostics and Testing, in this section).

NOTE
Open the hardtop halfway to allow slack in the flipper door drive cable

CAUTION:
This procedure requires two individuals.

Pre-removal Operation
- Detaching of drivers side of Trunk Trim Rear Panel to access wire harness (Refer to GROUP 52, in this Manual.)

Post-installation Operation
- Adjustment of Hard Tonneau, Tonneau Latches and Flipper Doors (Refer to SERVICE ADJUSTMENT PROCEDURES, in this section.)
- Reattaching of drivers side of Trunk Trim Rear Panel.)

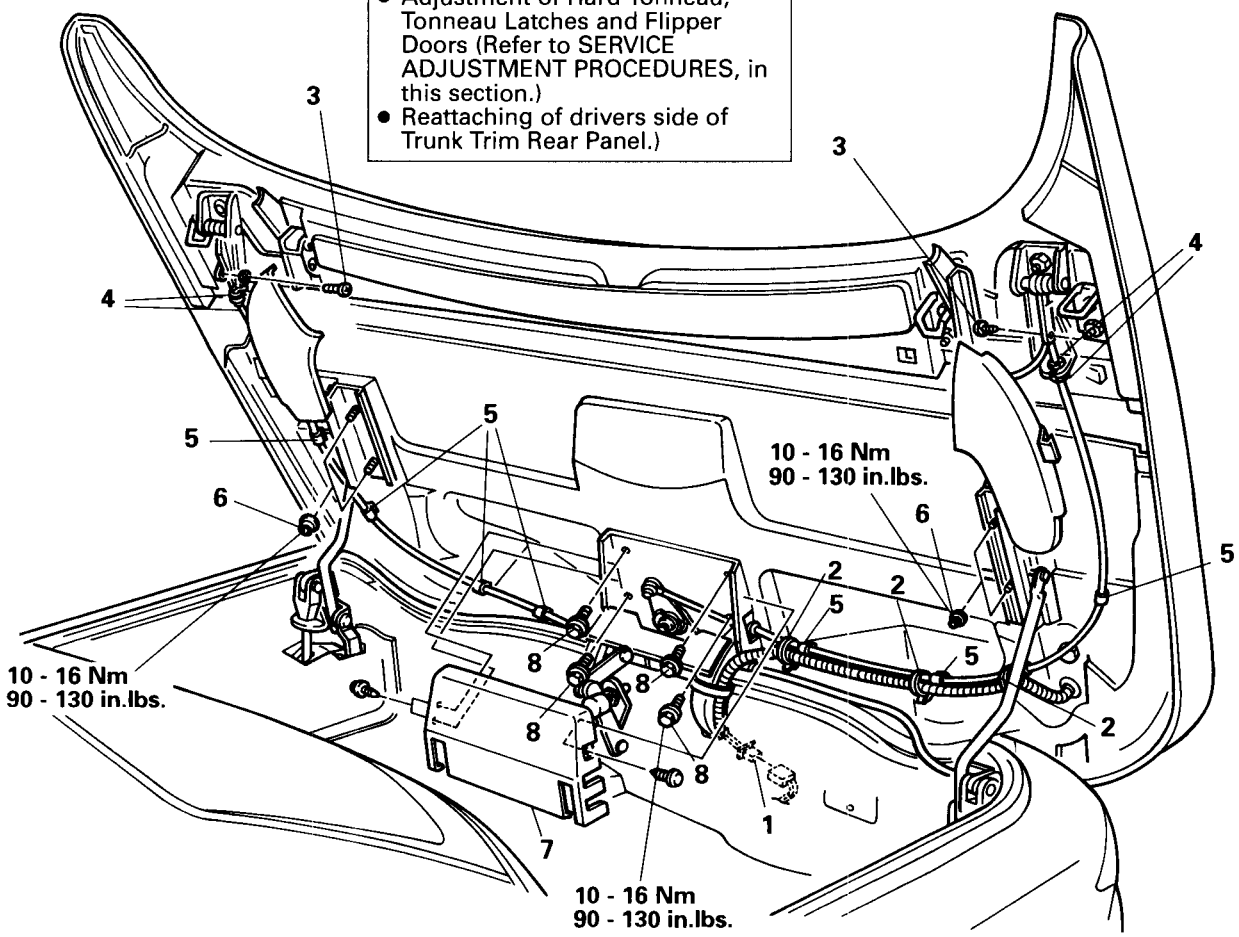

Hard tonneau removal steps

1. High mount stop light electrical connector
2. Wire tie
3. Screw
4. Jam-nut
5. Cable retainer
6. Nut
7. Cover
8. Bolt

SERVICE POINT OF REMOVAL

6. REMOVAL OF SLIDE TRACK ATTACHING NUTS

After removing the slide track attaching nuts be sure secure the slide tracks to the lift arms with tape or wire. This will prevent the slide tracks from falling onto the vehicle finish.

SERVICE POINT OF INSTALLATION

6. INSTALLATION OF SLIDE TRACK ATTACHING NUTS

Once the tonneau is in place, remove the tape or wire securing the slide tracks.

HARD TONNEAU

DISASSEMBLY AND REASSEMBLY

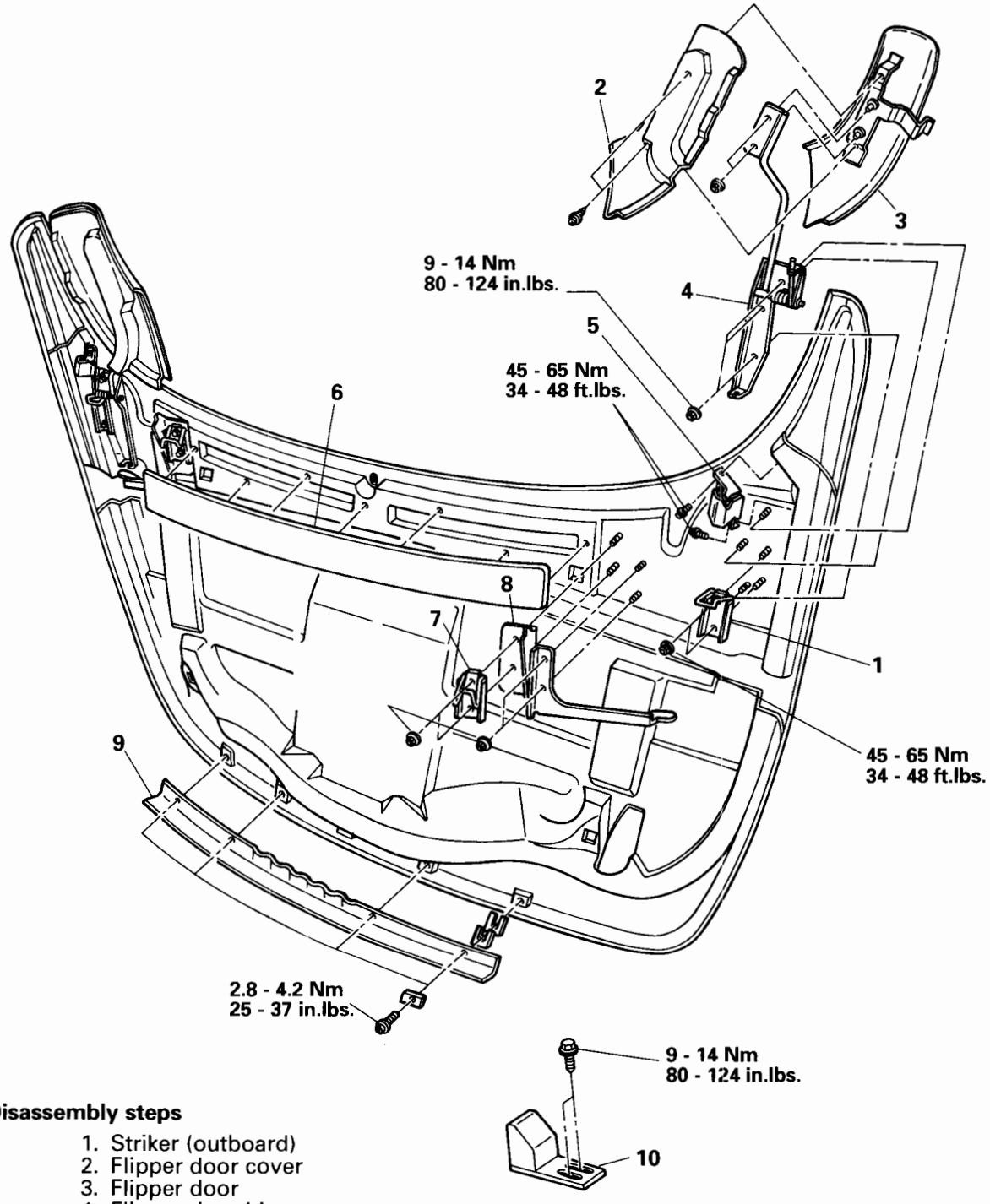

Disassembly steps

1. Striker (outboard)
2. Flipper door cover
3. Flipper door
4. Flipper door hinge
5. Stabilizer bracket
6. Tonneau pad
7. Striker (inboard)
8. Retainer
9. Rear skirt
10. Stabilizer

NOTE
Matchmark components before removal.

HARD TONNEAU MECHANISM

REMOVAL AND INSTALLATION

NOTE
When removing a tonneau mechanism it is not necessary to remove the tonneau. Suitably support the tonneau.

NOTE
Matchmark components before removal.

CAUTION:
Adjustment or replacement of these components may require that the hardtop ECU be run through Auto-configuration (Refer to Diagnostics and Testing, in this section).

Pre-removal and Post-installation Operation of RH Tonneau Mechanism
- Removal and Installation of RH Trunk Trim Panel (Refer to GROUP 52, in this Manual.)
- Removal and Installation of Hard Tonneau Position Sensor (Potentiometer) (Refer to this section.)

Pre-removal and Post-installation Operation of Tonneau Hinge
- Removal and Installation of Trunk Trim Rear Panel (Refer to GROUP 52, in this Manual.)

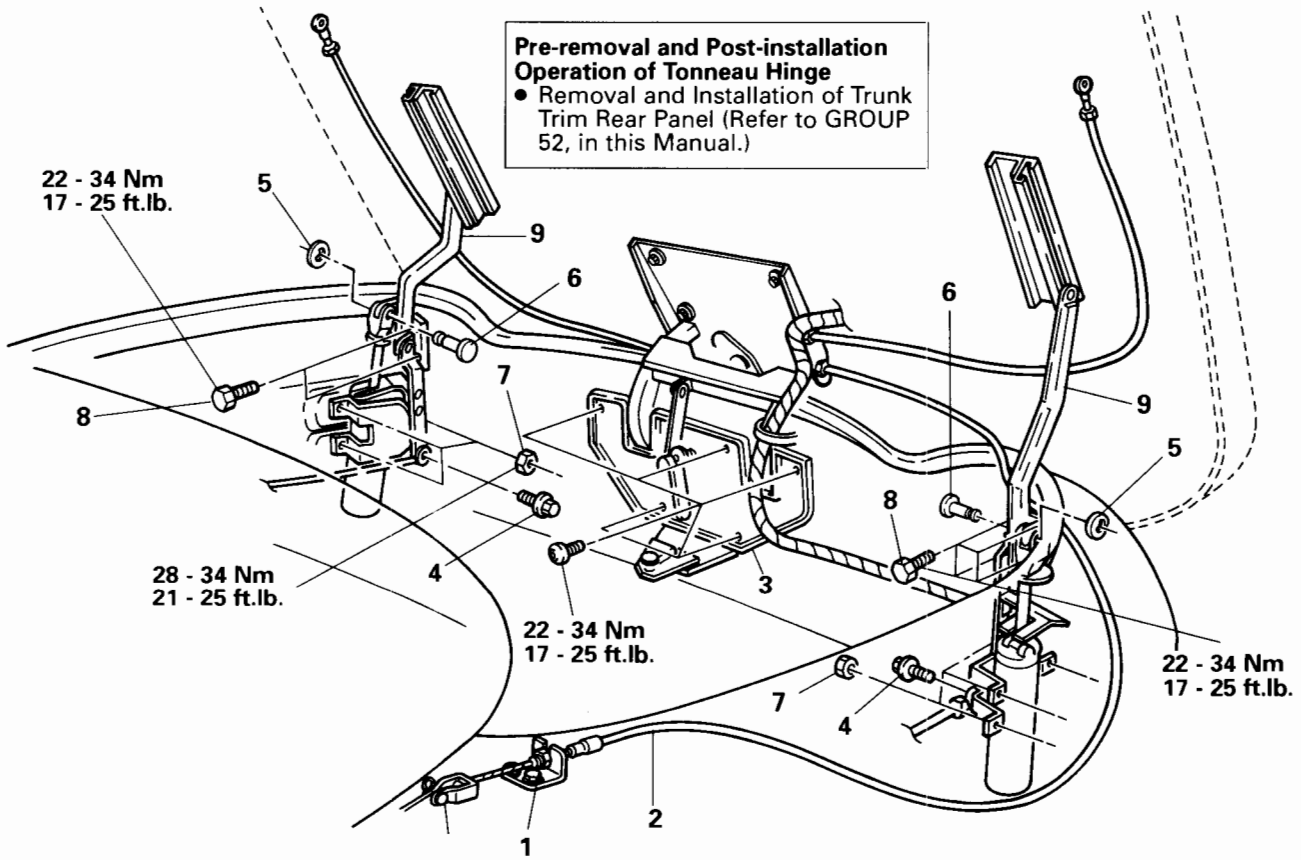

Tonneau hinge removal steps

1. Jam nut
2. Flipper door drive cable
3. Tonneau hinge

Tonneau mechanism removal steps

4. Screw
5. Clip
6. Clevis pin
7. Nut
8. Bolt
9. Tonneau mechanism lift arm

Pre-removal and Post-installation Operation of LH Tonneau Mechanism
- Removal and Installation of LH Trunk Trim Panel (Refer to GROUP 52, in this Manual.)

HARD TONNEAU MECHANISM

DISASSEMBLY AND REASSEMBLY

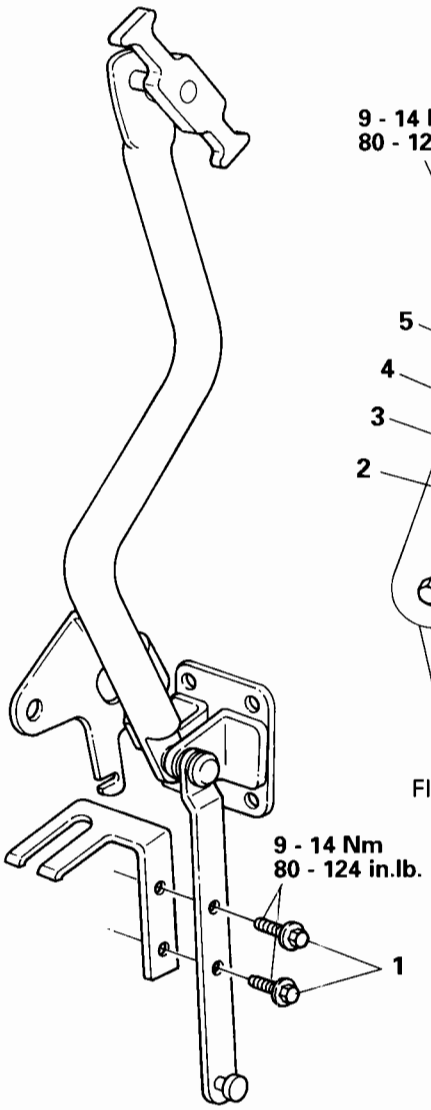

NOTE
Matchmark components before removal.

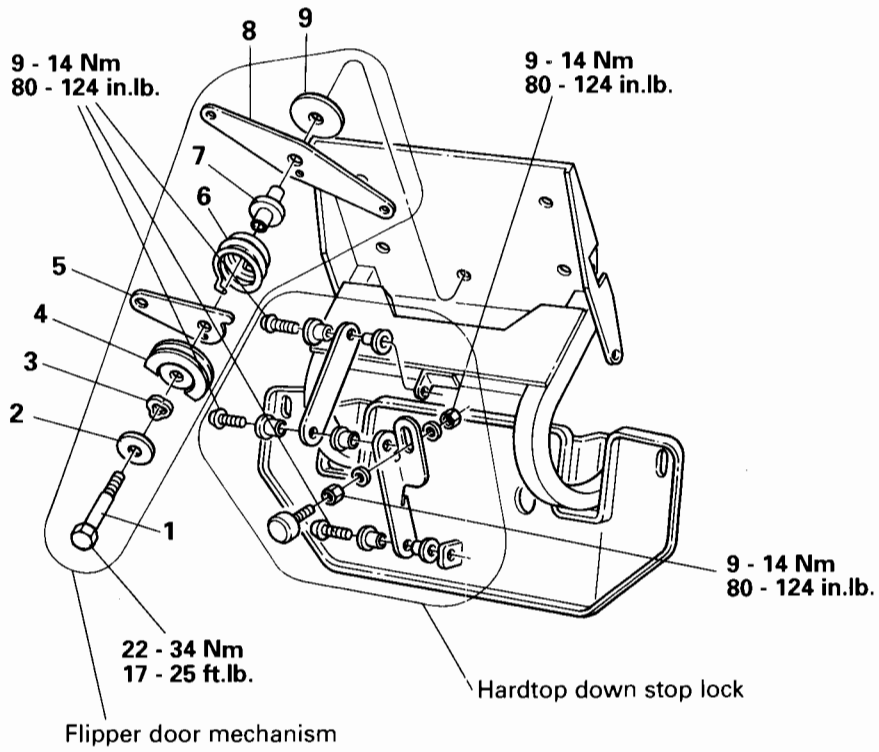

<Flipper door mechanism>

<Hardtop down stop lock>

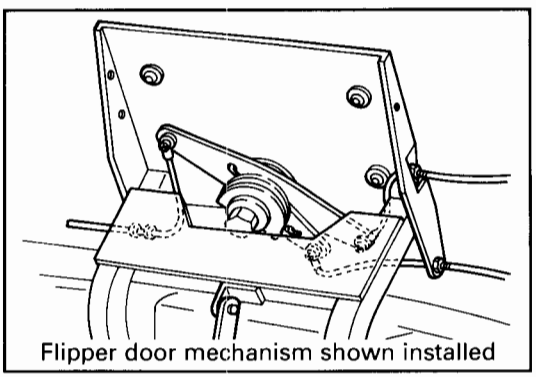

Tonneau mechanism disassembly

1. Bolt

Tonneau hinge disassembly steps

1. Bolt
2. Washer
3. Spring washer
4. Pulley
5. Idler
6. Spring
7. Bushing
8. Crank
9. Washer

HARD TONNEAU LATCH SYSTEM

REMOVAL AND INSTALLATION

Pre-removal and Post-installation of Manual Release Cable
- Removal and Installation of LH Quarter Trim Panel (Refer to Group 52, in this Manual.)
- Removal and Installation of LH Trunk Trim Panel, Trunk Center Front Panel and Hydraulic Line Cover (Refer to Group 52, in this Manual.)

CAUTION:
Adjustment or replacement of this component requires that the hard-top ECU be run through Auto-configuration (Refer to Diagnostics and Testing, in this section).

NOTE
Matchmark components before removal.

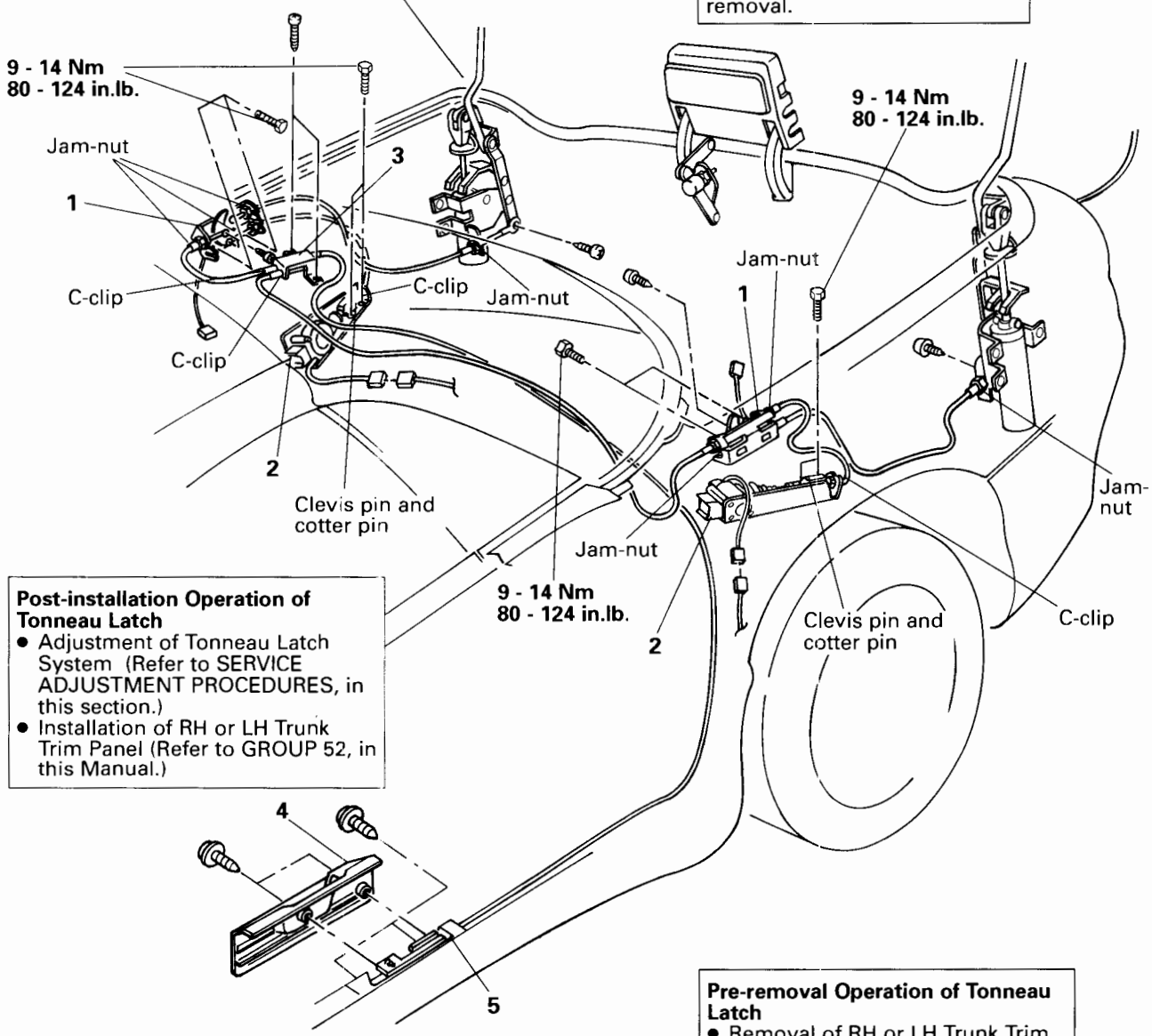

Post-installation Operation of Tonneau Latch
- Adjustment of Tonneau Latch System (Refer to SERVICE ADJUSTMENT PROCEDURES, in this section.)
- Installation of RH or LH Trunk Trim Panel (Refer to GROUP 52, in this Manual.)

Pre-removal Operation of Tonneau Latch
- Removal of RH or LH Trunk Trim Panel (Refer to GROUP 52, in this Manual.)

Pre-removal and Post-installation Operation of Tonneau Latch Actuator
- Removal and Installation of LH or RH Luggage Compartment Floor Box (Refer to GROUP 52, in this Manual.)

Removal steps

1. Tonneau latch
2. Latch actuator
3. Manual release junction
4. Cover
5. Manual release lever and cable

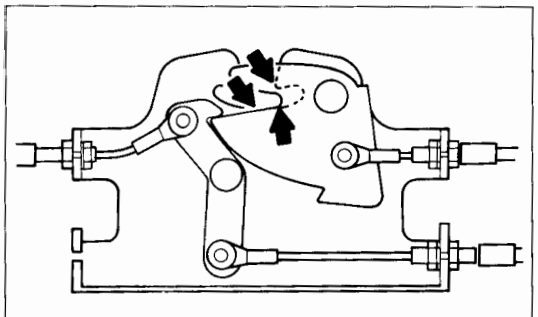
Side view of latch

INSPECTION

HARD TONNEAU LATCH

Inspect the tonneau latches for wear on the body of the latch and the pawl.

NOTE:
Wear is an indication of improperly adjusted latches, or excessive side-to-side motion of the hard tonneau due to improperly adjusted tonneau isolators.

Standard value: No wear on the latch body or pawls

Caution
Do not lubricate latch mechanisms or cable assemblies. Lubrication can attract dirt, causing rapid component wear and hamper system operation.

HARD TONNEAU HYDRAULIC SYSTEM PUMP/MOTOR AND CYLINDERS

REMOVAL AND INSTALLATION

CAUTION:
Adjustment or replacement of these components require that the hard-top ECU be run through Auto-configuration (Refer to Diagnostics and Testing, in this section).

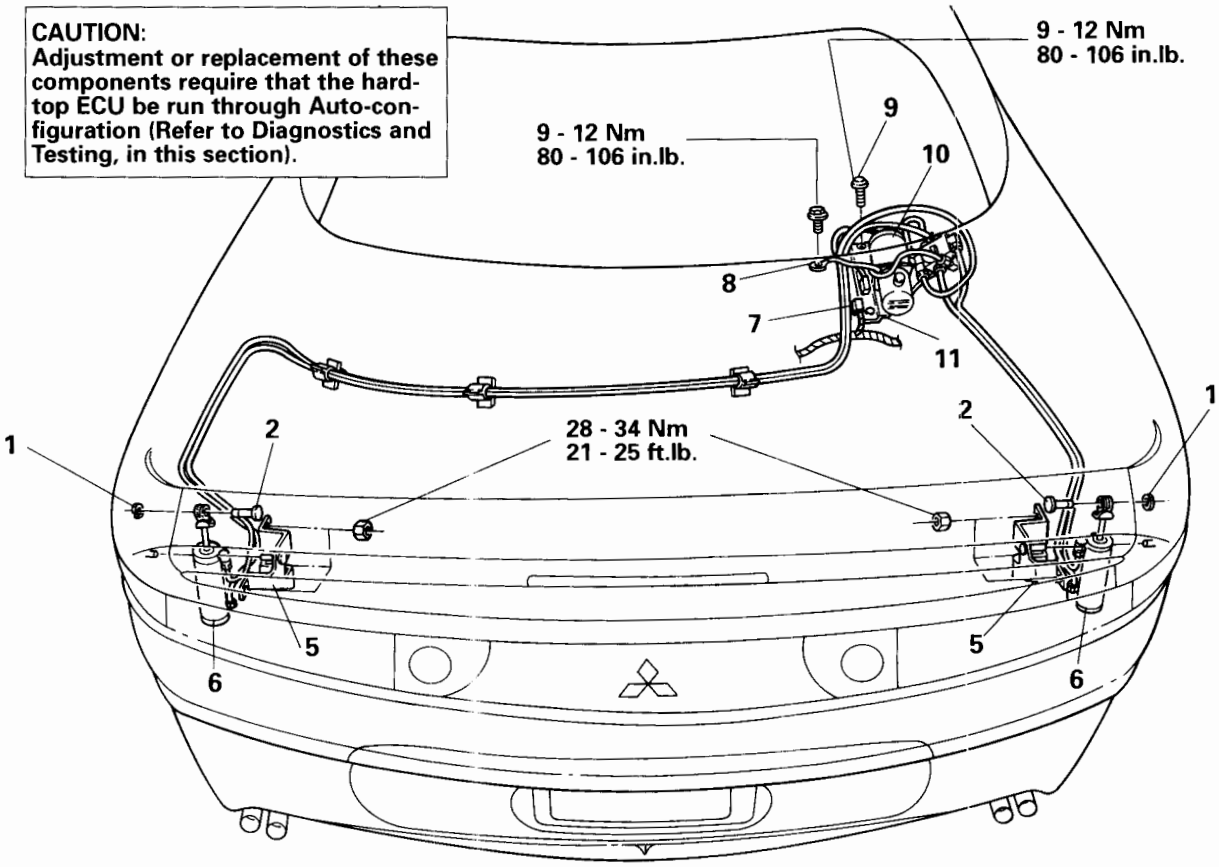

CAUTION:
When removing and installing any component of the hard tonneau hydraulic system, always suitably support the hard tonneau. Otherwise, injury could result.

Pre-removal and Post-installation Operation
- Removal of LH, RH and Front Trunk Trim (Refer to GROUP 52, in this Manual.)

Cylinder removal steps

1. Clip
2. Clevis pin
3. Screw
4. Bolt
5. Cylinder mounting bracket
6. ◆◆ ◆◆ Cylinder

Pump/motor assembly removal steps

7. Harness connector
8. Ground strap
9. Bolt
10. ◆◆ ◆◆ Pump/motor assembly
11. Bracket

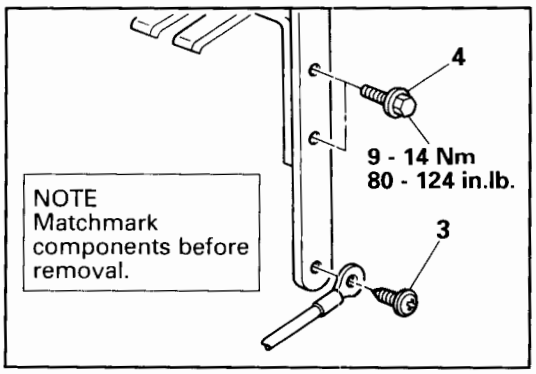

NOTE
Matchmark components before removal.

SERVICE POINTS OF REMOVAL

6. REMOVAL OF HARD TONNEAU HYDRAULIC CYLINDER FROM HYDRAULIC LINES, IF REQUIRED

(1) Place clean rags around the cylinder to prevent dripping of the hydraulic fluid.
(2) Remove the hydraulic hoses from the hydraulic cylinder. Plug or cap the hoses and cylinder fittings to prevent leakage.

Caution
Mismatched hoses will cause damage to the hard tonneau, mechanisms, and hinge. To avoid system damage and ease reassembly, be sure to label the correct position of each hose as they are removed.

10. REMOVAL OF HYDRAULIC PUMP/MOTOR ASSEMBLY

(1) • For removal of the hydraulic pump/motor assembly with hoses still attached, go to Step (2).

• For removal of the hydraulic pump/motor assembly only, follow the procedure below.

1. Place clean rags around the pump manifold to prevent dripping of the hydraulic fluid.
2. Remove the hydraulic hoses from the manifold. Plug or cap the hoses and manifold fittings to prevent leakage.

Caution
Mismatched hoses will cause damage to the hard tonneau, mechanisms, and hinge. To avoid system damage and ease reassembly, be sure to label the correct position of each hose as they are removed.

3. Go to Step (2).

(2) Lift the pump/motor to separate the bracket grommets from the body and to disengage the dual-lock fastener from the body.

SERVICE POINTS OF INSTALLATION

10. INSTALLATION OF HYDRAULIC PUMP/MOTOR ASSEMBLY

(1) Place the pump/motor in position, align the bracket grommets to the holes, and press them in.
(2) Install the bolt to hold the pump/motor bracket in place.
(3) Press the manifold-end of the assembly to engage the dual-lock fasteners.
(4) Reconnect the hydraulic hoses if they have been disconnected using the following procedure.
   1. Place clean rags around the pump manifold to prevent dripping of the hydraulic fluid.
   2. Remove the caps or plugs from the pump manifold and hydraulic hoses.
   3. Reconnect the hoses in the correct positions.

Caution
Mismatched hoses will cause damage to the hard tonneau, mechanisms, and hinge. To avoid system damage and ease reassembly, be sure to observe the hose position labels.

6. INSTALLATION OF HARD TONNEAU HYDRAULIC CYLINDER TO HYDRAULIC LINES, IF REQUIRED

(1) Place clean rags around the cylinder to prevent dripping of the hydraulic fluid.
(2) Remove the caps or plugs from the hoses and hydraulic cylinder.
(3) Reconnect the hoses in the correct positions.

Caution
Mismatched hoses will cause damage to the hard tonneau, mechanisms, and hinge. To avoid system damage and ease reassembly, be sure to observe the hose position labels.

HARD TONNEAU HYDRAULIC SYSTEM PUMP/MOTOR ASSEMBLY

DISASSEMBLY AND REASSEMBLY

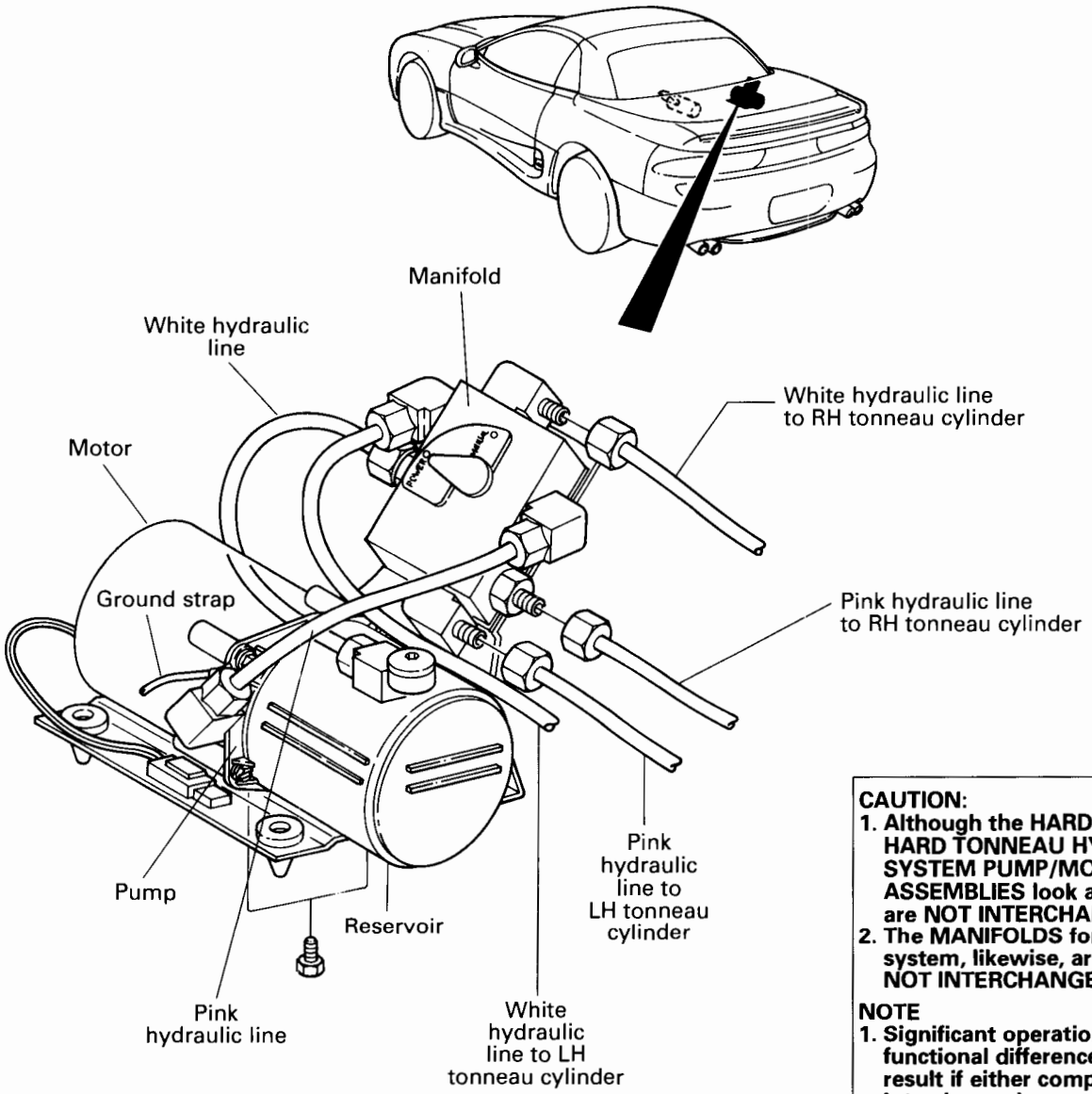

CAUTION:
1. **Although the HARDTOP and HARD TONNEAU HYDRAULIC SYSTEM PUMP/MOTOR ASSEMBLIES look alike, they are NOT INTERCHANGEABLE.**
2. **The MANIFOLDS for either system, likewise, are also NOT INTERCHANGEABLE.**

NOTE
1. **Significant operational and functional differences will result if either component is interchanged or replaced with an incorrect part. Damage may result.**
2. **Individual parts do not bear distinguishing marks or identification.**

HARD TONNEAU HYDRAULIC PUMP/MOTOR

DISASSEMBLY AND REASSEMBLY

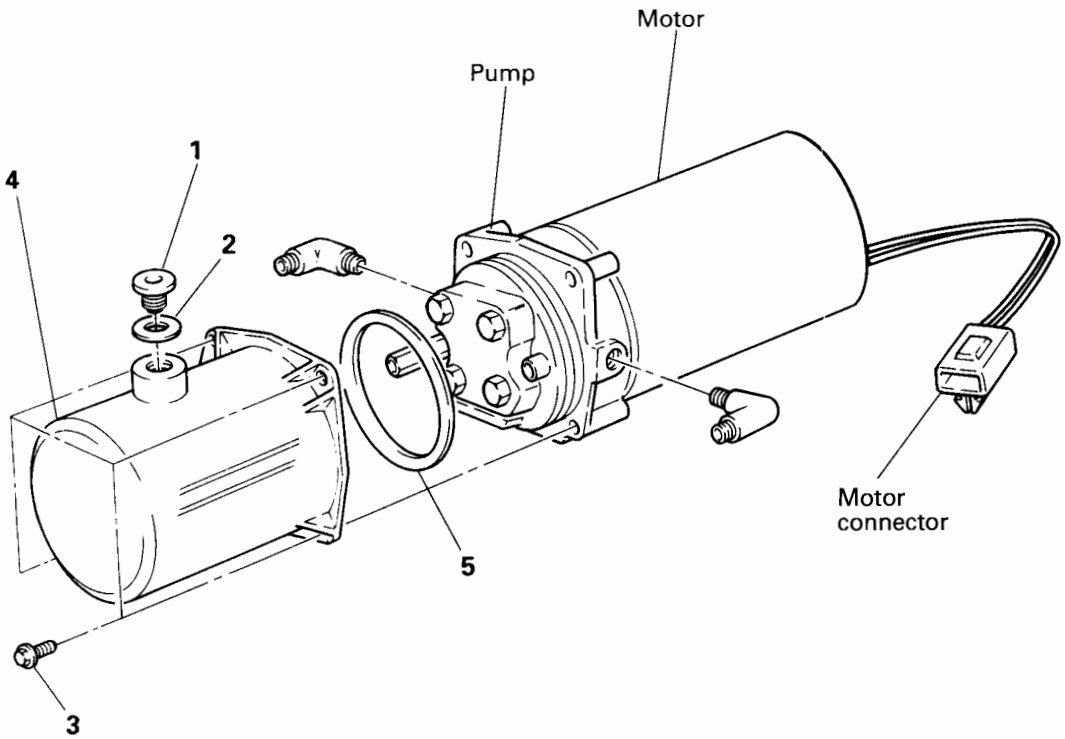

Disassembly steps

1. Plug
2. Seal

Reservoir

3. Screw
4. Reservoir
5. Seal

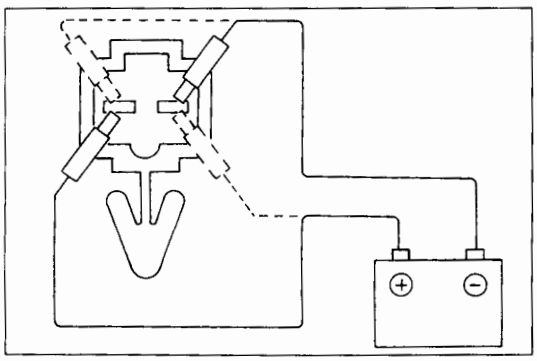

INSPECTION

HYDRAULIC PUMP MOTOR

1. Connect the battery directly to the motor connector and check that the motor spins freely.
2. Reverse the polarity and check that the motor spins freely in the opposite direction.

NOTE
If the motor does not spin freely, replace the pump/motor. **DO NOT repair or rebuild motor.**

HARD TONNEAU POSITION SENSOR (POTENTIOMETER)

REMOVAL AND INSTALLATION

Pre-removal Operation
- Open the hard tonneau halfway to access the sensor's mounting bracket upper attaching bolt
- Removal of RH Trunk Trim Panel (Refer to GROUP 52, in this Manual.)

Post-installation Operation
- Installation of RH Trunk Trim Panel (Refer to GROUP 52 - Trims, in this Manual.)
- Run the Hardtop ECU Through Auto-configuration (Refer to DIAGNOSTICS and TESTING, in this section.)

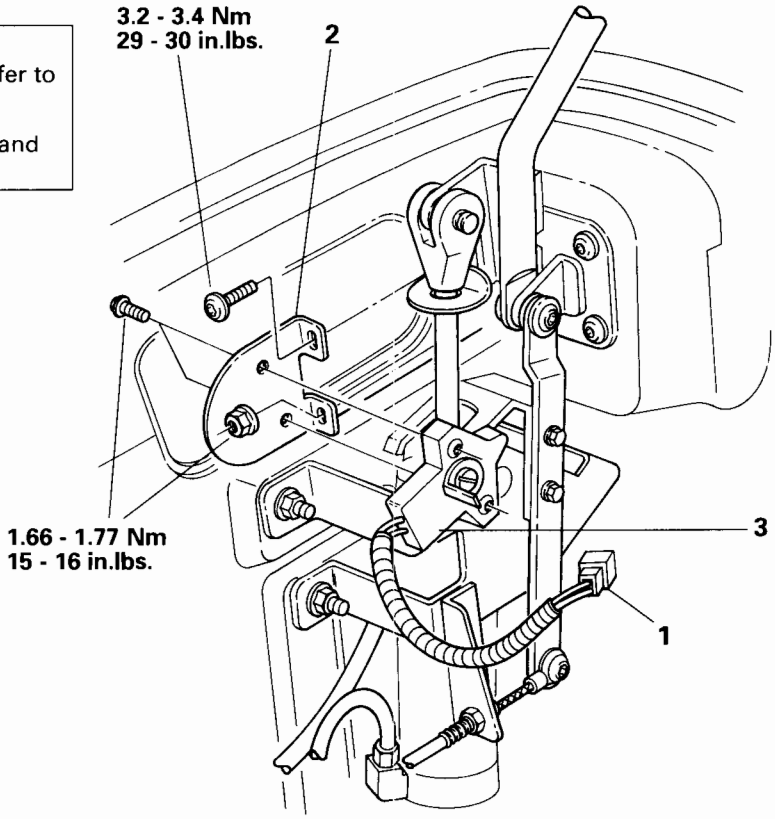

Removal steps

1. Electrical connector
2. Sensor bracket
3. ◆◆ Sensor (potentiometer)

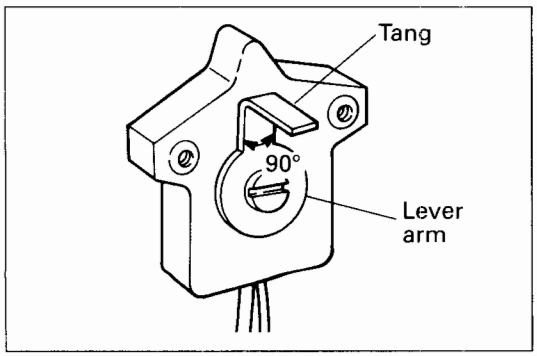

INSPECTION

INSPECTION OF HARD TONNEAU POSITION SENSOR

1. ON- AND OFF-CAR VISUAL INSPECTION

(1) Check that the sensor's lever arm and tang are not bent.

Standard value: Tang 90° to lever arm

(2) Check the lever arm shaft for radial play and mechanical operation.

Standard value: No play and smooth, quiet operation

NOTE:
If the sensor is removed for inspection, you must run the hardtop ECU through Auto-configuration using the latest version of the ASC INCORPORATED diagnostic system.

2. **ON-CAR ONLY ELECTRONIC INSPECTION**

   Refer to Diagnostics and Testing, in this section.

SERVICE POINT OF INSTALLATION

3. **INSTALLATION OF HARD TONNEAU POSITION SENSOR**

   Be sure the sensor's lever arm tang is in the slot in the lift arm.

RETRACTABLE HARDTOP FRONT ROOF PANEL

REMOVAL AND INSTALLATION

Pre-removal Operation
- Removal of Front Headlining (Refer to GROUP 52, in this Manual.)

Post-installation Operation
- Installation Front Headlining (Refer to GROUP 52, in this Manual.)
- Adjustment of Hardtop (Refer to SERVICE ADJUSTMENT PROCEDURES, in this section.)

CAUTION:
This procedure requires two individuals to safely remove and install front roof panel.

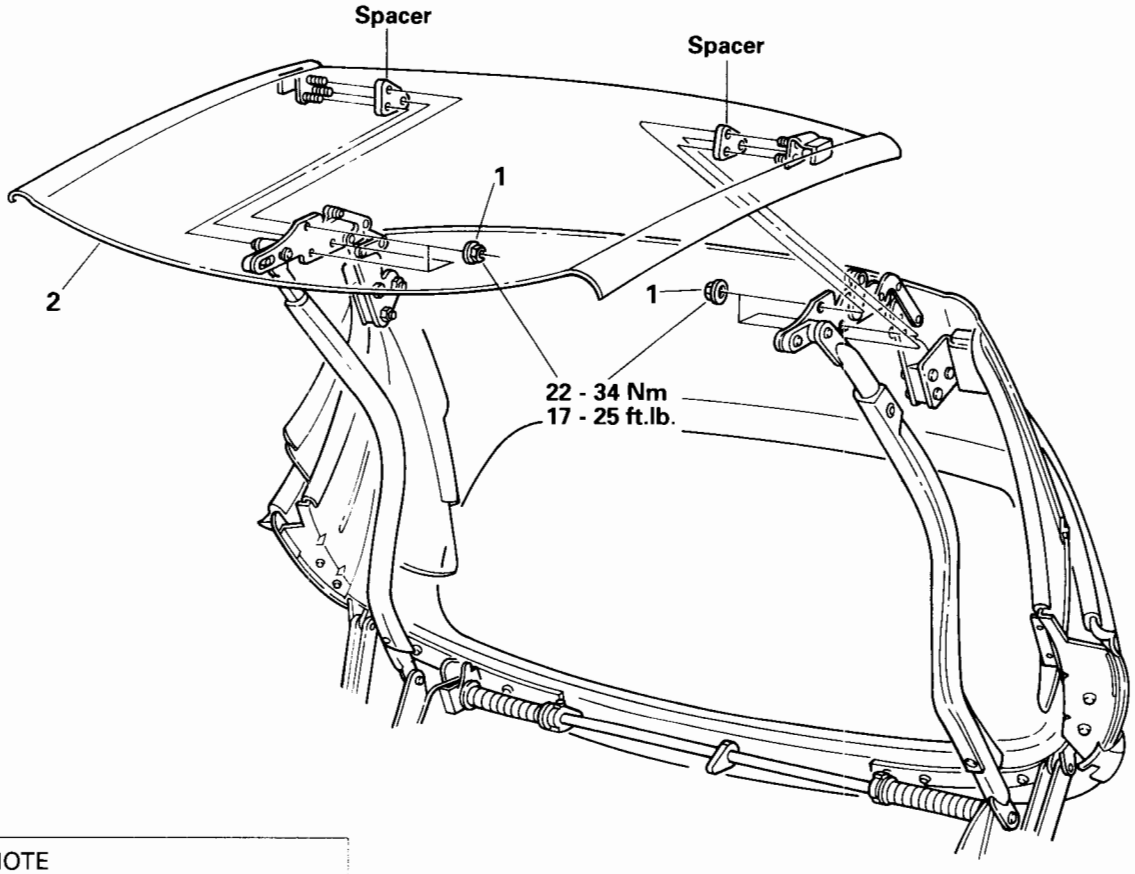

NOTE
Matchmark components before removal.

CAUTION:
Adjustment or replacement of this component requires that the hardtop ECU be run through Auto-configuration (Refer to Diagnostics and Testing, in this section).

Removal steps

1. Nut
◆◆ ◆◆ 2. Roof panel

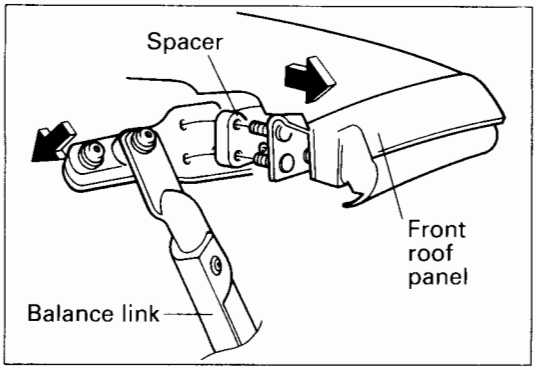

SERVICE POINT OF REMOVAL

2. REMOVAL OF FRONT ROOF PANEL

(1) From one side of the vehicle have the assistant hold the front roof panel steady.
(2) From the other side of the vehicle push inboard on the balance link to disengage the roof from the roof hinge.
(3) Repeat for the other side.

SERVICE POINT OF INSTALLATION

2. INSTALLATION OF FRONT ROOF PANEL

(1) Install LH and RH spacers to roof panel brackets.
(2) From one side of the vehicle engage the roof panel into the roof hinge.
(3) At the other side of the vehicle push inboard on the balance link and engage the roof panel into the hinge.

RETRACTABLE HARDTOP FRONT ROOF PANEL

DISASSEMBLY AND REASSEMBLY

Post-reassembly Operation
- Adjustment of Hardtop Locator Pins (Refer to SERVICE ADJUSTMENT PROCEDURES, in this section.)

NOTE
Matchmark components before disassembly.

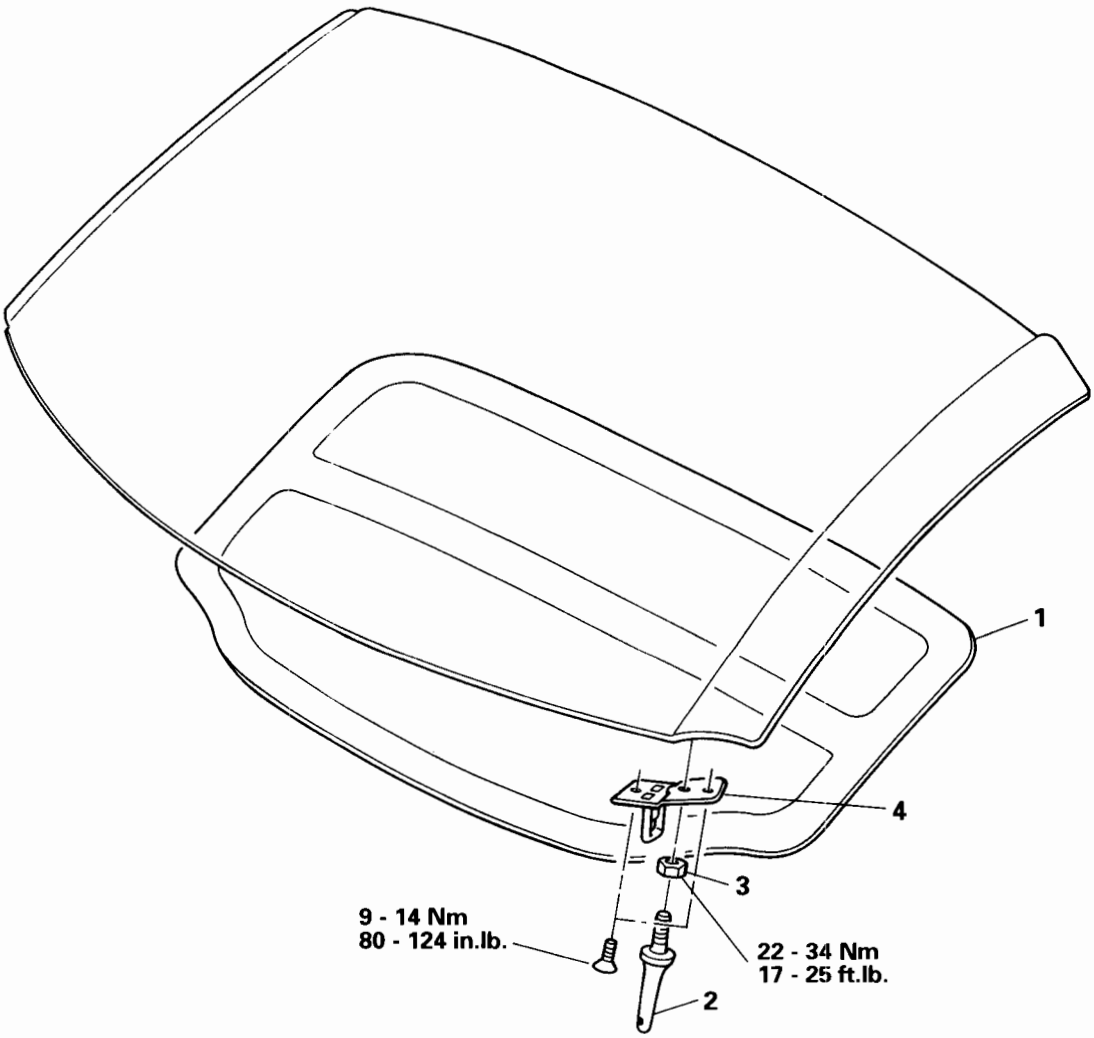

Disassembly steps

1. Sound deadener
2. Locator pin
3. Jam-nut
4. Striker

RETRACTABLE HARDTOP ASSEMBLY

REMOVAL AND INSTALLATION

CAUTION:
This procedure requires at least two individuals to safely remove and install the hardtop assembly.

Pre-removal and Post-installation Operation
- Removal and Installation of Trunk Center Front Panel, Hydraulic Line Cover, Center Closeout Panel, and LH and RH Quarter Trim Panels (Refer to GROUP 52, in this Manual.)

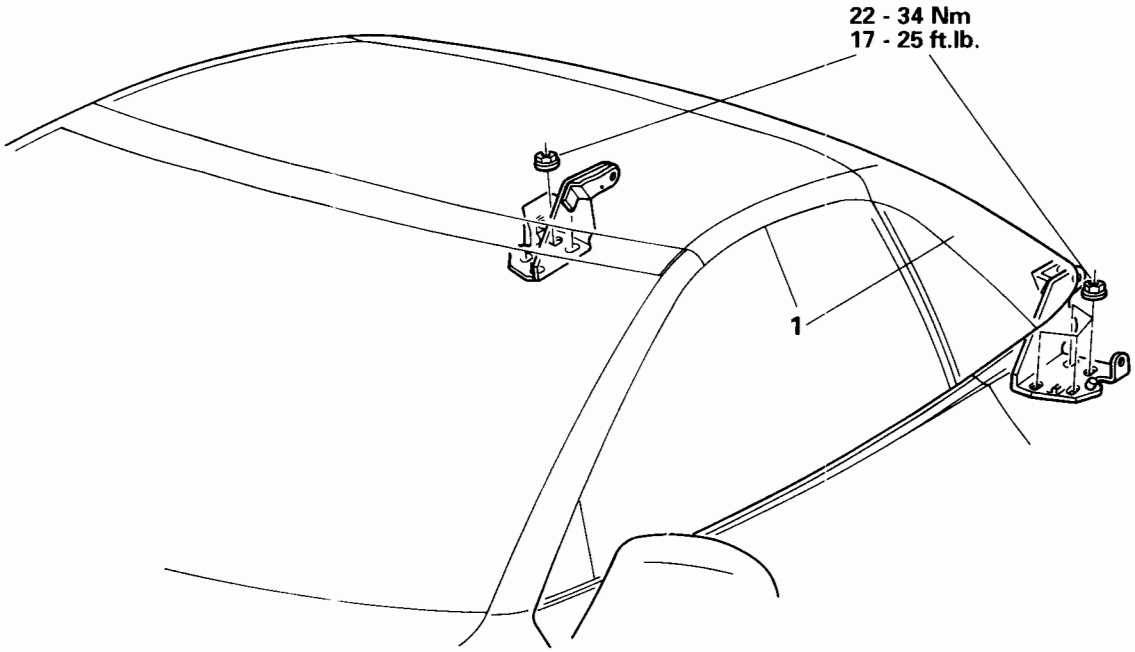

CAUTION:
Adjustment or replacement of this component requires that the hardtop ECU be run through Auto-configuration (Refer to Diagnostics and Testing, in this section).

Removal step

◆◆ ◆◆ 1. Hardtop assembly

SERVICE POINT OF REMOVAL

1. REMOVAL OF HARDTOP ASSEMBLY

(1) Open the hardtop until the LH and RH torsion springs are unsprung and can be moved easily on the torque tube.
(2) Matchmark the torsion springs to the main pivot brackets and to the torsion spring holders on the torque tube.
(3) Matchmark the torsion spring holders to the torque tube.

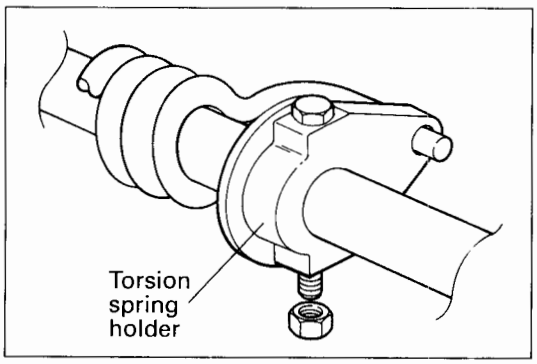

(4) Remove the bolts attaching the torsion spring holders to the torque tube.
(5) Disconnect the roof wiring harness.

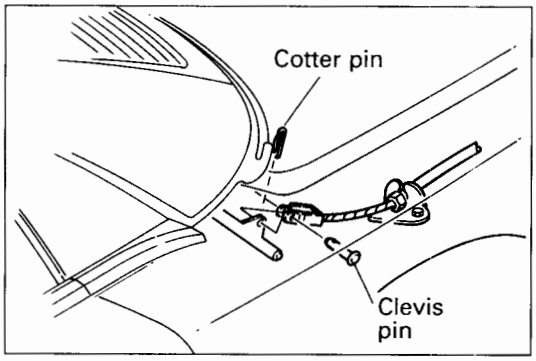

(6) Disconnect the flipper door drive cable from the hardtop mechanism.
(7) Fully open the hardtop.

Caution
Since the torsion springs have been disconnected from the hardtop mechanism the hardtop will not have spring resistance when opening or closing. This will cause accelerated opening or closing.

(8) Remove the nut and bolt attaching the LH and RH hardtop hydraulic cylinders to the hardtop mechanism.
(9) Close the hardtop manually.
(10) Retract both hydraulic cylinders using the hardtop "CLOSE" switch.
(11) Disconnect the hardtop position sensor (potentiometer) harness connector.
(12) Open the hardtop manually.
(13) There are four main pivot attaching nuts at both main pivot brackets. At each main pivot bracket remove both forward nuts and one of the rearward nuts. Loosen only the remaining fourth nuts so that they will prevent the hardtop assembly from prematurely separating from the vehicle.
(14) Carefully close or raise the hardtop.
(15) Remove the remaining main pivot attaching nuts.
(16) Carefully separate the hardtop assembly from the vehicle.

Caution
As the hardtop assembly is being raised and separated from the vehicle it will tend to fold into itself. Therefore keep fingers and other body parts out of moving parts.

SERVICE POINT OF INSTALLATION

2. INSTALLATION OF FRONT ROOF PANEL

(1) Carefully install the hardtop assembly to the vehicle.

Caution
As the hardtop assembly is being installed in the vehicle it will tend to fold into itself. Therefore keep fingers and other body parts out of moving parts.

(2) Make sure the locator pin on each main pivot bracket is in the locator hole in the body structure.
(3) Close the hardtop.
(3) Install the two rearward main pivot attaching nuts at each main pivot bracket.
(4) Carefully open the hardtop.

Caution
Since the torsion springs have been disconnected from the hardtop mechanism the hardtop will not have spring resistance when opening or closing. This will cause accelerated opening or closing.

(5) Install the remaining main pivot attaching nuts at both main pivot brackets.
(6) Reconnect the hardtop position sensor (potentiometer) harness connector.
(7) Reconnect the roof wiring harness.
(8) Extend both hydraulic cylinders using the hardtop "OPEN" switch.
(9) Reattach the LH and RH hardtop hydraulic cylinders to the hardtop mechanism with the nuts and bolts.

NOTE
The hardtop "OPEN"/"CLOSE" switch can be used to incrementally position the cylinder rods to the hardtop mechanisms.

Standard value: 22 - 34 Nm (17 - 25 ft.lb.)

(10) Open the hardtop halfway.
(11) Reconnect the flipper door drive cable to the hardtop mechanism.
(12) Engage the LH and RH torsion springs into the main pivot brackets.
(13) Slide the torsion spring holders over to the torsion springs and engage the coil spring into them.
(14) Open or close the hardtop as necessary to align the bolt holes in the torsion spring holders to the holes in the torque tube and install the attaching bolts and nuts.

Standard value: 45 - 65 Nm (34 - 48 ft.lb.)

RETRACTABLE HARDTOP ASSEMBLY

DISASSEMBLY AND REASSEMBLY

<Mechanism>

NOTE
Matchmark components before dissassembly.

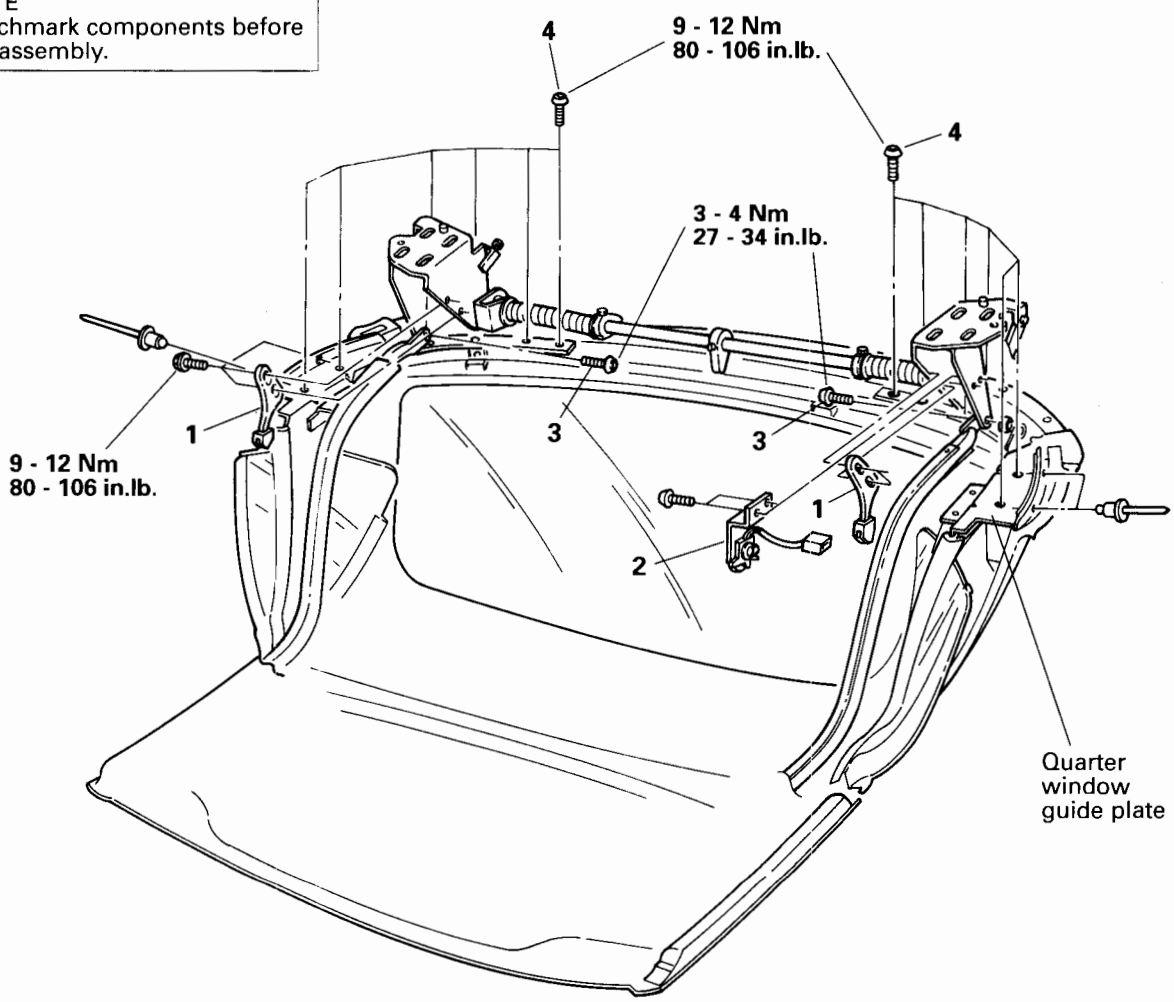

Pre-removal and Post-installation Operation
- Removal and Installation of Two Front Rivets attaching Hardtop Weatherstrip (Refer to Weatherstrip in this section.)

Disassembly steps

1. Center closeout guide assembly
2. Hardtop position sensor bracket
3. Bolt
4. Bolt

RETRACTABLE HARDTOP ASSEMBLY

DISASSEMBLY AND REASSEMBLY

<Mechanism>

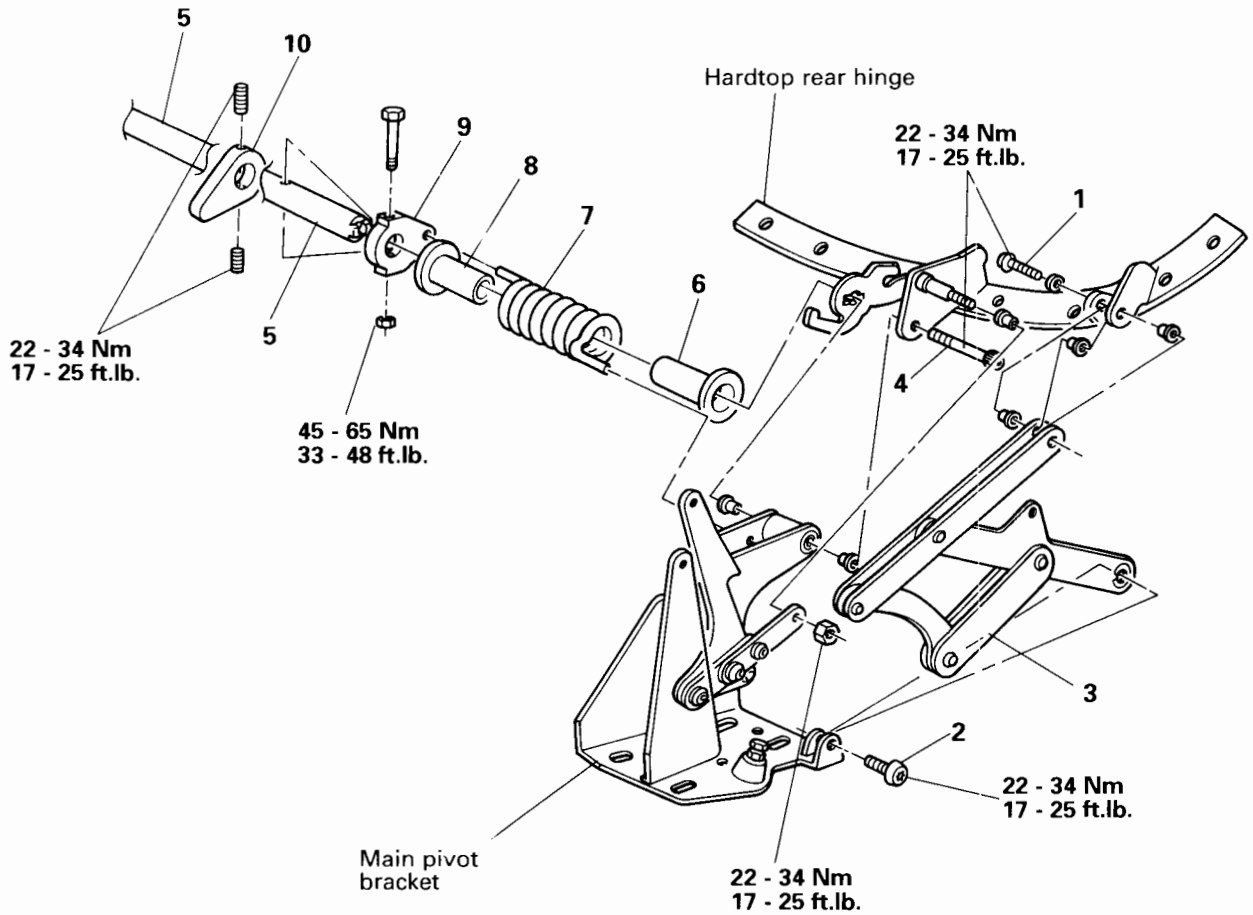

Disassembly steps

1. Bolt
2. Bolt
3. Drive link assembly
4. Bolt
5. Torque tube
6. Torsion spring spacer
7. Torsion spring
8. Torsion spring spacer
9. Torsion spring holder
10. Center closeout down stop

RETRACTABLE HARDTOP ASSEMBLY

DISASSEMBLY AND REASSEMBLY

<Mechanism>

NOTE
Matchmark components before disassembly.

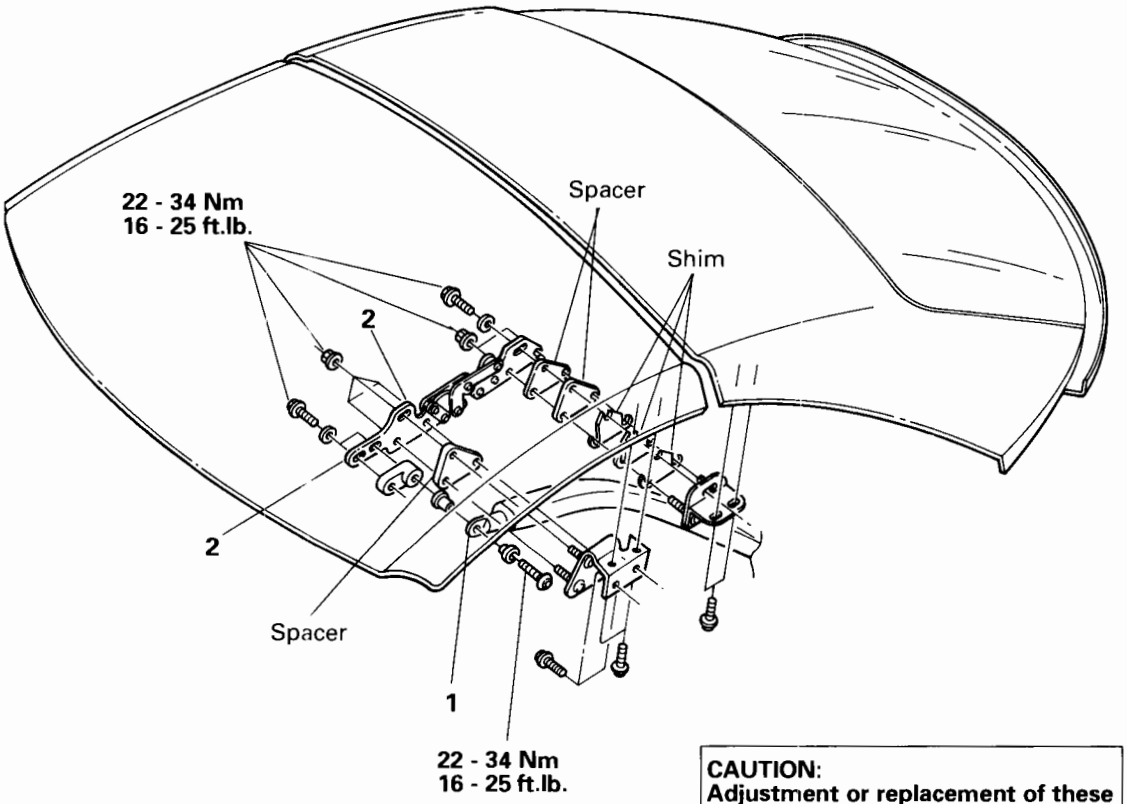

CAUTION:
Adjustment or replacement of these components require that the hardtop ECU be run through Auto-configuration (Refer to Diagnostics and Testing, in this section).

Disassembly steps

1. Balance link
2. Roof center hinge

<Hardtop down stop>

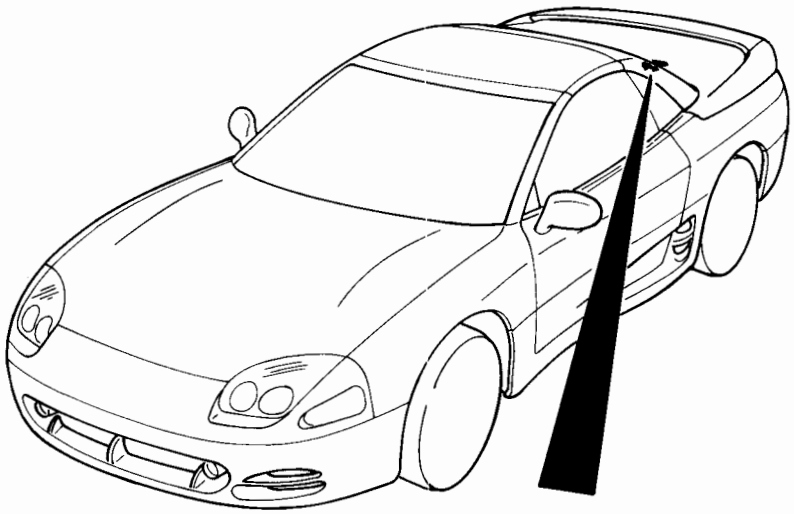

Pre-removal Operation
- Removal of Trunk Trim Rear Panel (Refer to GROUP 52, in this Manual.)

Post-installation Operation
- Installation of Trunk Trim Rear Panel (Refer to GROUP 52, in this Manual.)
- Adjustment of Hardtop Down Stop (Refer to SERVICE ADJUSTMENT PROCEDURES, in this Manual.)

NOTE
Matchmark components before removal.

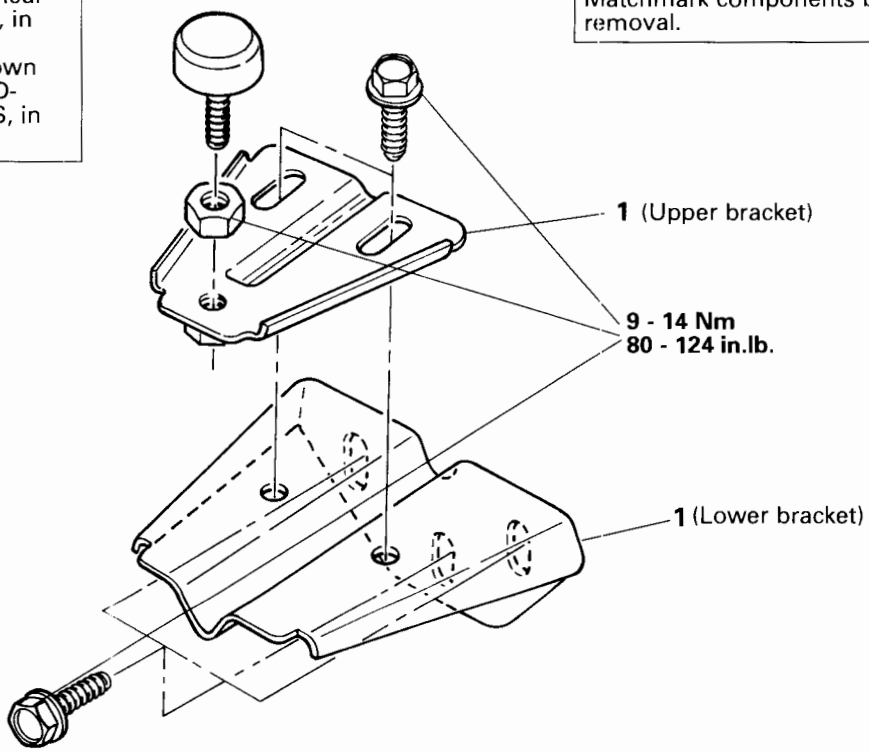

CAUTION:
Adjustment or replacement of this component requires that the hardtop ECU be run through Auto-configuration (Refer to Diagnostics and Testing, in this section).

Removal step

1. Hardtop down stop

RETRACTABLE HARDTOP POSITION SENSOR (POTENTIOMETER)

REMOVAL AND INSTALLATION

Pre-removal Operation
- Fully open the hardtop, but do not close tonneau.

Post-installation Operation
- Run the Hardtop ECU through Auto-configuration (Refer to DIAGNOSTICS and TESTING in this section.)

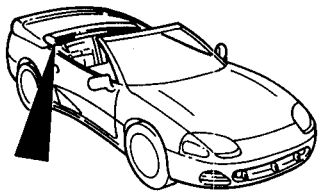

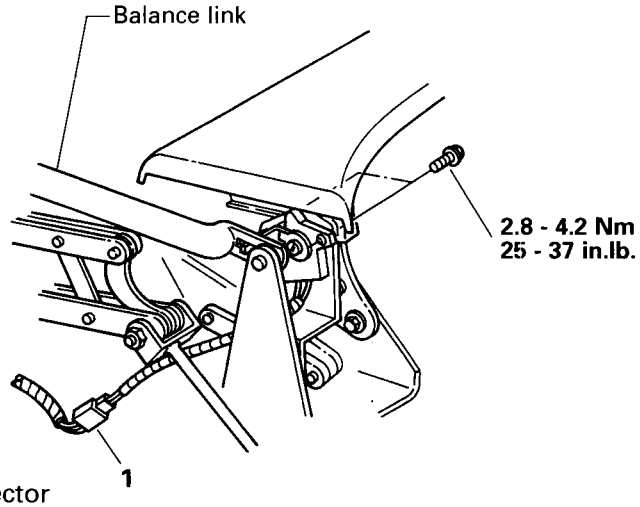

Removal steps

1. Electrical connector
2. Sensor

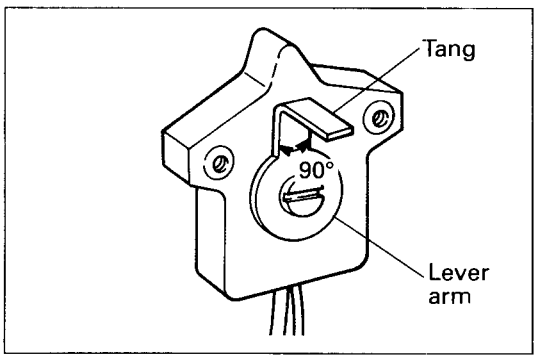

INSPECTION

INSPECTION OF RETRACTABLE HARDTOP POSITION SENSOR

1. ON- AND OFF-CAR VISUAL INSPECTION

(1) Check that the sensor's lever arm and tang are not bent.

Standard value: Tang 90° to lever arm

(2) Check the lever arm shaft for radial play and mechanical operation.

Standard value: No play and smooth, quiet operation

TSB Revision

NOTE:
If the sensor is removed for inspection, you must run the hardtop ECU through Auto-configuration using the latest version of the ASC INCORPORATED diagnostic system.

2. **ON-CAR ONLY ELECTRONIC INSPECTION**

   Refer to Diagnostics and Testing, in this section.

SERVICE POINT OF INSTALLATION

2. **INSTALLATION OF RETRACTABLE HARDTOP POSITION SENSOR**

   Be sure the sensor's lever arm tang is in the balance link.

RETRACTABLE HARDTOP HYDRAULIC SYSTEM PUMP/MOTOR AND CYLINDERS

REMOVAL AND INSTALLATION

NOTE
Hardtop must be open to remove hydraulic cylinders.

CAUTION:
Adjustment or replacement of these components require that the hardtop ECU be run through Auto-configuration (Refer to Diagnostics and Testing, in this section).

Pre-removal and Post-installation Operation of Hardtop Hydraulic Cylinders
- Removal and Installation of LH and/or RH Quarter Trim Panels (Refer to GROUP 52, in this Manual.)
- Removal and Installation of LH and/or RH Speaker (Refer to GROUP 54, in this Manual.)

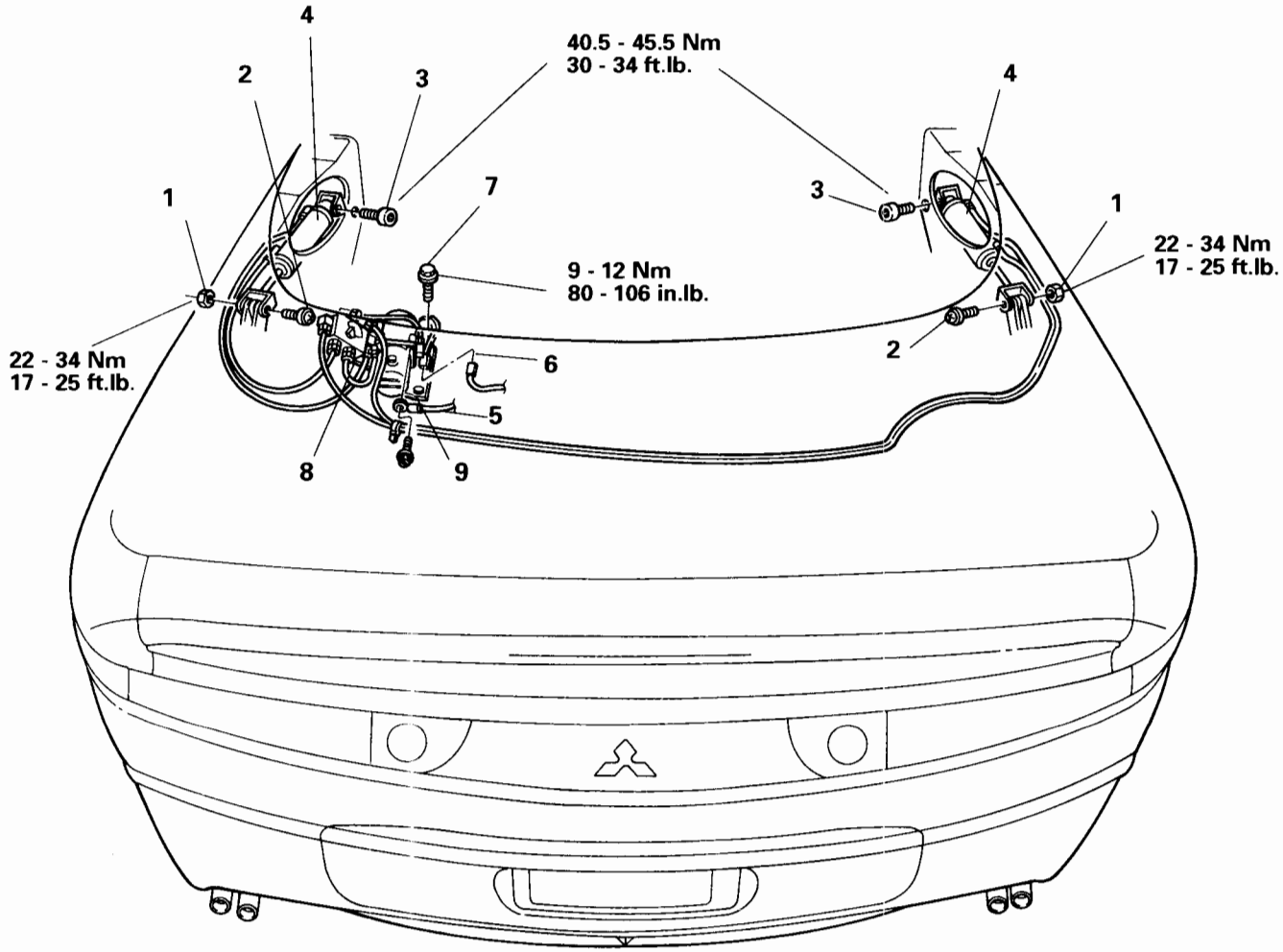

Hardtop hydraulic cylinder removal steps

1. Nut
2. Bolt
3. Bolt
4. Hydraulic cylinder

Hardtop hydraulic pump/motor removal steps

5. Ground strap
6. Electrical connector
7. Bolt
8. Pump/motor assembly
9. Bracket

Pre-removal and Post-installation Operation of Hardtop Hydraulic Pump/Motor
- Removal and Installation of Trunk Center Front Panel and Hydraulic Line Cover (Refer to GROUP 52, in this Manual.)

SERVICE POINTS OF REMOVAL

4. REMOVAL OF HARDTOP HYDRAULIC CYLINDER FROM HYDRAULIC LINES, IF REQUIRED

(1) Place clean rags around the cylinder to prevent dripping of the hydraulic fluid.
(2) Remove the hydraulic hoses from the hydraulic cylinder. Plug or cap the hoses and cylinder fittings to prevent leakage.

Caution
Mismatched hoses will cause damage to the hardtop and mechanisms. To avoid system damage and ease reassembly, be sure to label the correct position of each hose as they are removed.

8. REMOVAL OF HYDRAULIC PUMP/MOTOR ASSEMBLY

(1) • For removal of the hydraulic pump/motor assembly with hoses still attached, go to Step (2).
• For removal the hydraulic pump/motor assembly only, follow the procedure below.
1. Place clean rags around the pump manifold to prevent dripping of the hydraulic fluid.
2. Remove the hydraulic hoses from the manifold. Plug or cap the hoses and manifold fittings to prevent leakage.

Caution
Mismatched hoses will cause damage to the hardtop and mechanisms. To avoid system damage and ease reassembly, be sure to label the correct position of each hose as they are removed.

3. Go to Step (2).

(2) Lift the pump/motor to separate the bracket grommets from the body and to disengage the dual-lock fastener from the body.

SERVICE POINTS OF INSTALLATION

8. INSTALLATION OF HYDRAULIC PUMP/MOTOR ASSEMBLY

(1) Place the pump/motor in position, align the bracket grommets to the holes, and press them in.
(2) Install the bolt to hold the pump/motor bracket in place.
(3) Press the manifold-end of the assembly to engage the dual-lock fasteners.
(4) Reconnect the hydraulic hoses if they have been disconnected using the following procedure.
1. Place clean rags around the pump manifold to prevent dripping of the hydraulic fluid.
2. Remove the caps or plugs from the pump manifold and hydraulic hoses.
3. Reconnect the hoses in the correct positions.

Caution
Mismatched hoses will cause damage to the hardtop and mechanisms. To avoid system damage and ease reassembly, be sure to observe the hose position labels.

4. **INSTALLATION OF HARD TONNEAU HYDRAULIC CYLINDER FROM HYDRAULIC LINES, IF REQUIRED**
   (1) Place clean rags around the cylinder to prevent dripping of the hydraulic fluid.
   (2) Remove the caps or plugs from the hoses and hydraulic cylinder.
   (3) Reconnect the hoses in the correct positions.

Caution
Mismatched hoses will cause damage to the hardtop and mechanisms. To avoid system damage and ease reassembly, be sure to observe the hose position labels.

RETRACTABLE HARDTOP HYDRAULIC SYSTEM PUMP/MOTOR ASSEMBLY

DISASSEMBLY AND ASSEMBLY

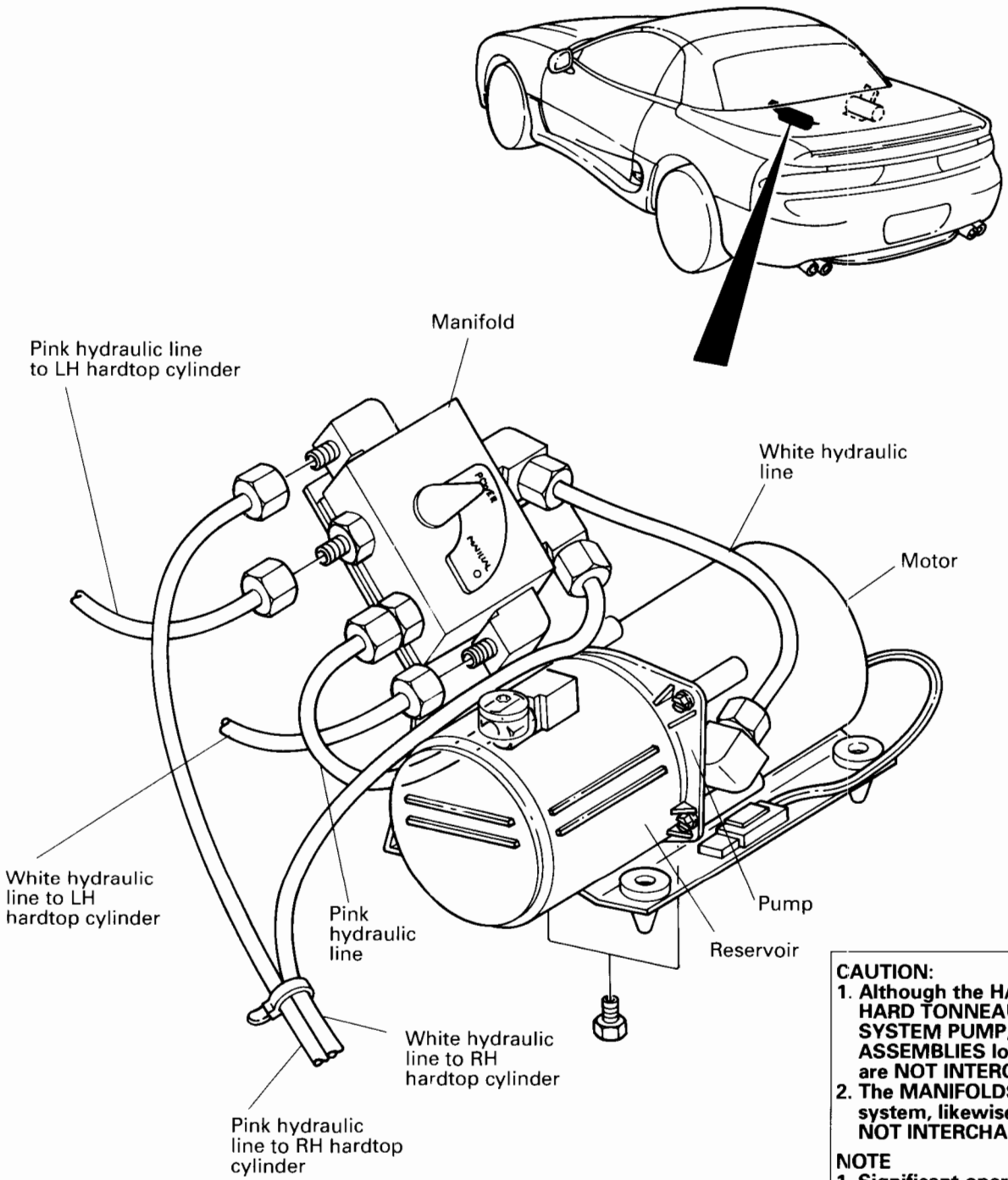

CAUTION:
1. **Although the HARDTOP and HARD TONNEAU HYDRAULIC SYSTEM PUMP/MOTOR ASSEMBLIES look alike, they are NOT INTERCHANGEABLE.**
2. **The MANIFOLDS for either system, likewise, are also NOT INTERCHANGEABLE.**

NOTE
1. **Significant operational and functional differences will result if either component is interchanged or replaced with an incorrect part. Damage may result.**
2. **Individual parts do not bear distinguishing marks or identification, only the entire assembly itself.**

RETRACTABLE HARDTOP HYDRAULIC PUMP/MOTOR

DISASSEMBLY AND REASSEMBLY

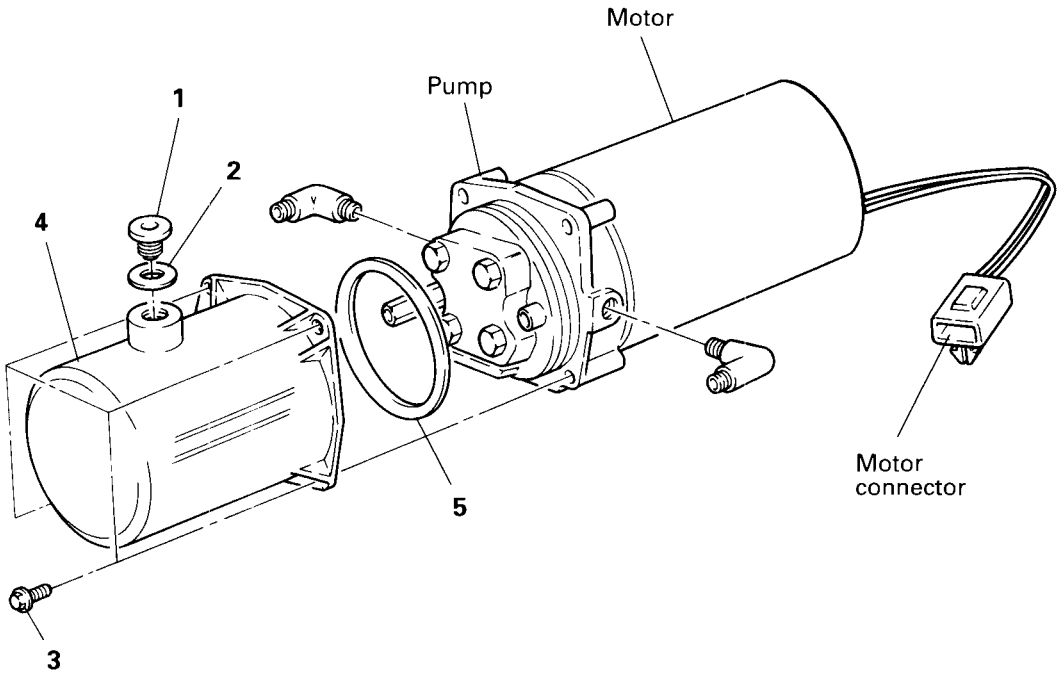

Disassembly steps

1. Plug
2. Seal

Reservoir

3. Screw
4. Reservoir
5. Seal

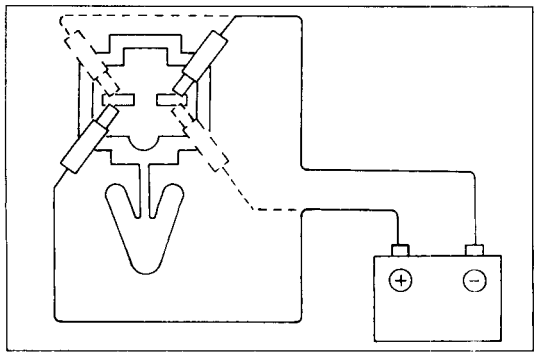

INSPECTION

HYDRAULIC PUMP MOTOR

1. Connect the battery directly to the motor connector and check that the motor spins freely.
2. Reverse the polarity and check that the motor spins freely in the opposite direction.

NOTE
If the motor does not spin freely, replace the pump/motor. DO NOT repair or rebuild motor.

HYDRAULIC SYSTEM DIAGRAMS

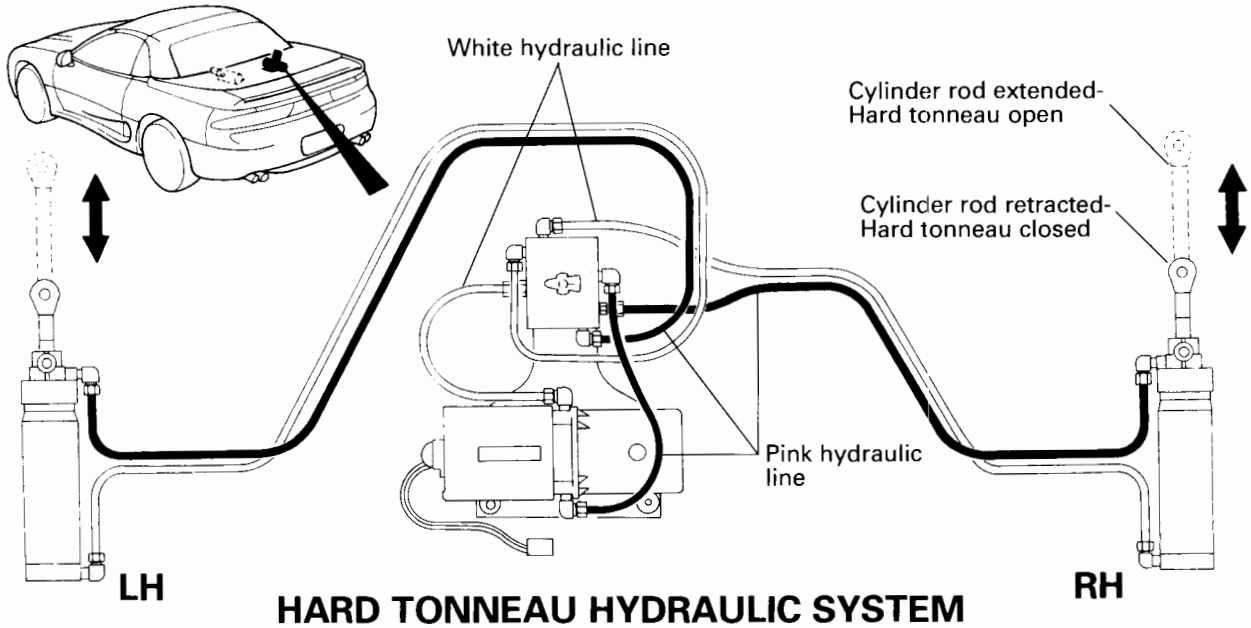

HARD TONNEAU HYDRAULIC SYSTEM

NOT TO SCALE

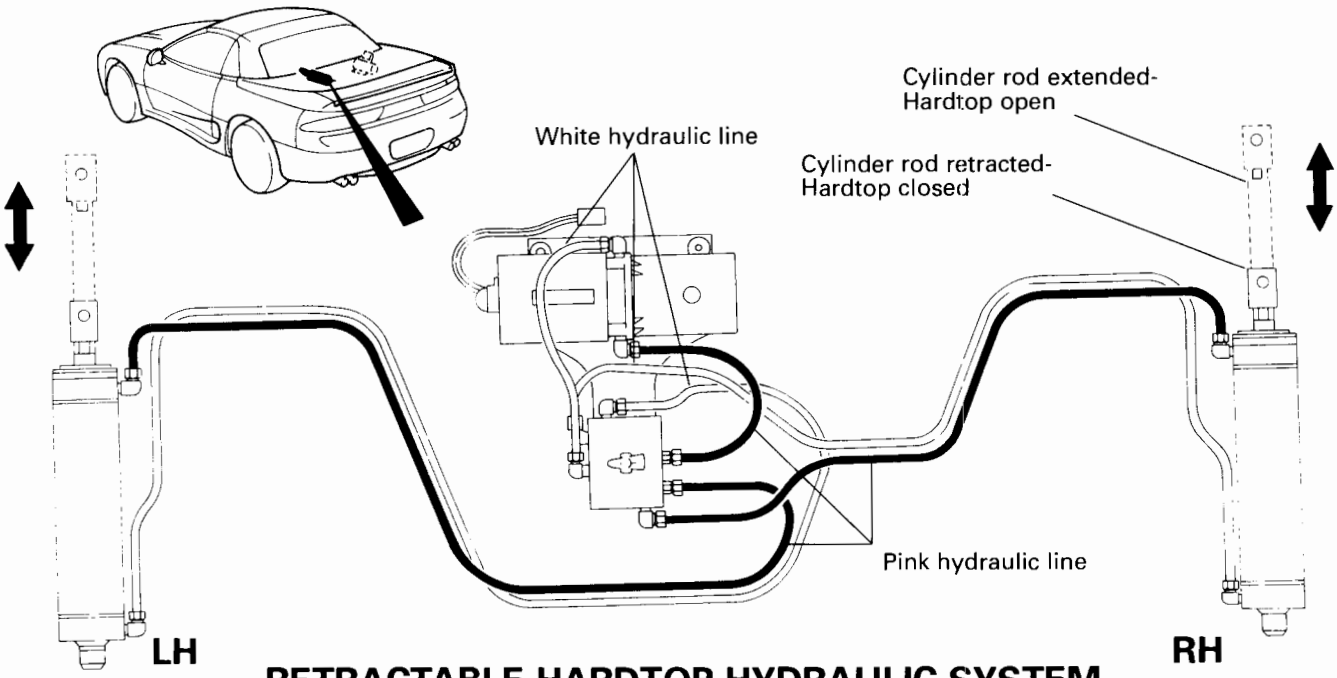

RETRACTABLE HARDTOP HYDRAULIC SYSTEM

NOT TO SCALE

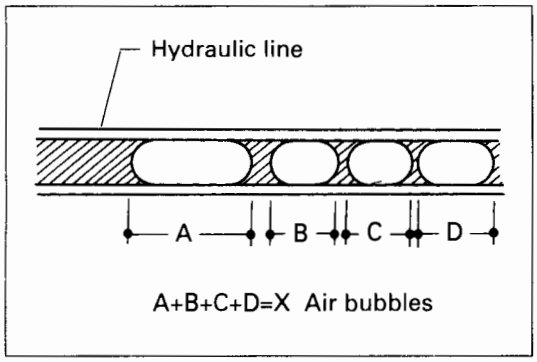

HYDRAULIC SYSTEM BLEEDING

ACCEPTABLE LEVELS OF TRAPPED AIR BUBBLES

The hard tonneau and retractable hardtop hydraulic systems are each designed to operate with 101.6 linear mm ± 50.8 linear mm (4 linear in. ± 2 in.) (cumulative) of visible trapped air bubbles in each of the hydraulic lines. Bubbles can be viewed through the translucent plastic lines after the protective black tubing is removed. This does not include air trapped elsewhere in the system such as in the pump cavity; in fittings; in the manifold assembly; and under or above each hydraulic cylinder piston.

Above 152.4 linear mm (6 linear in.), operation may be sluggish, accompanied by an intermittently noisy pump/motor. The noise is created by the air bubbles being forced through the pump. A noisy pump is a good indicator of excessive air in the system. To bleed the system, use the following appropriate procedure.

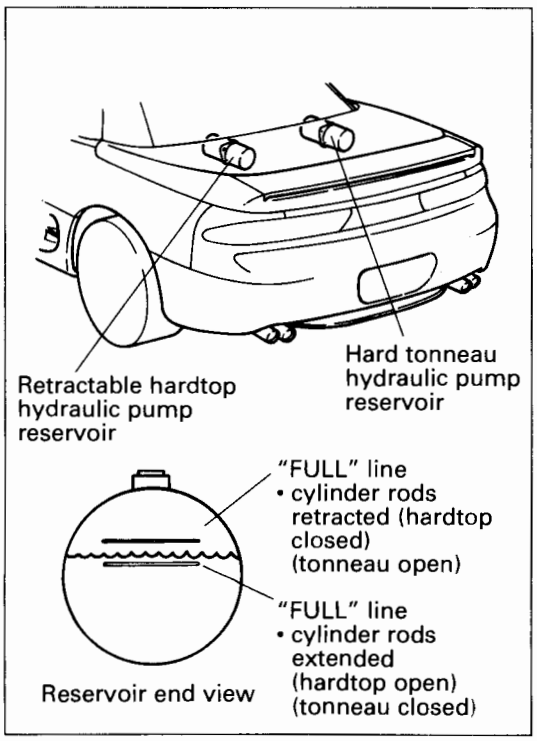

PRE-BLEEDING NOTES

(1) Remove the appropriate trunk trim to access the hydraulic system components.
(2) Make sure the hydraulic reservoir is filled.
(3) Do not allow the hydraulic oil to become aerated or foamy, which may occur with constant operation. If this occurs, discontinue operation and allow the air bubbles to rise in the reservoir. Bleed the system only when the oil in the reservoir becomes clear and aeration-free.
(4) Inspect all components for breaks or looseness that could cause air to enter the system or fluid leaks.
(5) Before bleeding, remove the reservoir filler plug to vent off trapped air, and place clean absorbent rags around the pump/motor to catch any spills.
(6) A hydraulic system with 152.4 linear mm (6 linear in.) or less of air in each line can sometimes be sufficiently bled by cycling the affected system 6-8 times.
(7) When cycling is not effective in reducing air bubbles to an acceptable level, the system must be bled.

HARD TONNEAU SYSTEM BLEEDING

Under most circumstances the hard tonneau hydraulic system can be effectively bled simply by cycling the hard tonneau 6-8 times using the tonneau "OPEN"/"CLOSE" switch.

If cycling the tonneau 6-8 times proves unsuccessful, bleed the system using the following procedure. This will allow the cylinder rods to fully extend and retract, forcing out most of the air.

1. Open the tonneau and suitably support the tonneau.
2. Disconnect the LH and RH tonneau cylinders from the lift arms by removing the clips and the clevis pins.
3. Using the tonneau switch, fully extend and retract the tonneau cylinders until they are within the Standard value for having air in the lines.

   NOTE
   If the tonneau cylinders do not react to the switch, it may be necessary to lower the tonneau slightly because the tonneau position sensor may be reading a full-open position.

   Caution
   Be sure that when the cylinders are cycling that they do not contact the vehicle or the lift arms, or cause personal injury.

4. Reattach the cylinders with the clevis pins and clips. Remove the suitable support.
5. Reattach the trunk trim.

RETRACTABLE HARDTOP SYSTEM BLEEDING

Under most circumstances the hardtop hydraulic system can be effectively bled simply by cycling the hardtop 6-8 times using the hardtop "OPEN"/"CLOSE" switch.

If cycling the hardtop 6-8 times proves unsuccessful, bleed the system using the following procedure. This will allow the cylinder rods to fully extend and retract, forcing out most of the air.

1. Disconnect the LH and RH hardtop cylinders from the hardtop (refer to **RETRACTABLE HARDTOP HYDRAULIC SYSTEM PUMP/MOTOR AND CYLINDERS,** in this section).
2. Install and connect the object in trunk sensor, if it is not already installed.
3. Raise and suitably support the hardtop 101.6 mm (4 in.) off the hardtop down stop. Otherwise, the hardtop position sensor may read a full-open position.
4. Using the hardtop switch, fully extend and retract the hardtop cylinders until they are within the Standard value for having air in the lines.

Caution
Be sure that when the cylinders are cycling that they do not contact the vehicle or hardtop mechanisms, or cause personal injury.

- If the bleeding procedure was successful, go to Step 5, then the procedure will be complete.
- If the bleeding procedure was unsuccessful, go to Step 8.

5. Reattach the cylinders (refer to **RETRACTABLE HARDTOP HYDRAULIC SYSTEM PUMP/MOTOR AND CYLINDERS,** in this section).
6. Remove the suitable support from the hardtop down stop.
7. Reattach the trunk trim.
8. Remove both hardtop hydraulic cylinders from the vehicle with hydraulic lines still connected (refer to **RETRACTABLE HARDTOP HYDRAULIC SYSTEM PUMP/MOTOR AND CYLINDERS,** in this section).

NOTE
This procedure is best performed with both cylinders held in the cargo/hardtop stowage area.

Caution
To prevent injury or damage when operating the hydraulic cylinders, keep the hydraulic cylinders clear of your body and the vehicle.

9. Close the hardtop until it is approximately 152.4 mm (6.0 in.) from the header and suitably support it there.

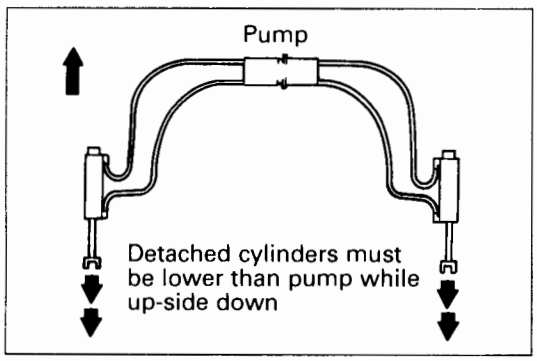

10. Press the hardtop "OPEN" switch to fully extend the hydraulic cylinder piston rods.
11. Instruct two helpers to turn the cylinders up-side down and hold them lower than the pump for approximately 3-4 minutes. This allows air bubbles in the cylinders to rise so they will be forced out when the hardtop "CLOSE" switch is pressed.

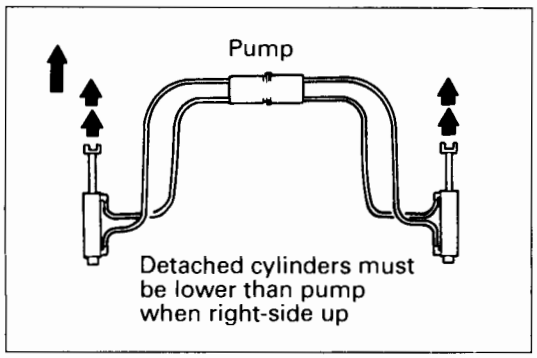

12. Press the hardtop "CLOSE" switch to fully retract both cylinders.
13. Instruct the helpers to turn the cylinders right-side-up and hold them lower than the pump for approximately 3-4 minutes.
14. Press the hardtop "OPEN" switch to fully extend both cylinders.
15. Check the hydraulic lines for air bubbles.
    - If the air in each line is within the Standard value, reinstall the hydraulic cylinders (refer to **RETRACTABLE HARDTOP HYDRAULIC SYSTEM PUMP/MOTOR AND**

CYLINDERS, in this section).

- If the air in the lines is more than the Standard value, repeat Steps 9 through 15.

FRONT FENDER

REMOVAL AND INSTALLATION

CAUTION: SRS
When removing and installing the front fender panel, do not allow any impact or shock to the front impact sensor.

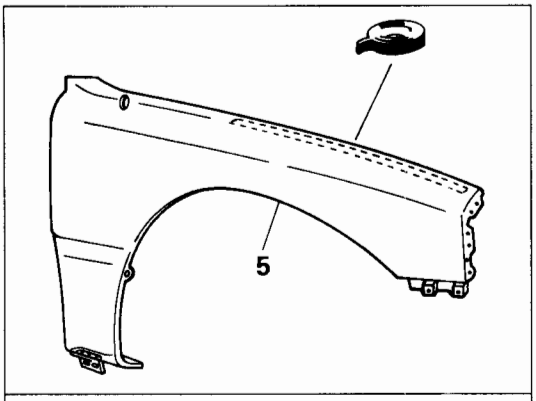

Sealant:
3M ATD Part No. 8625, or equivalent

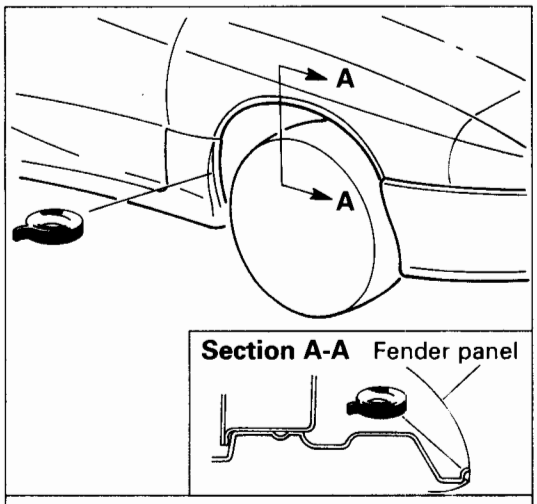

Sealant:
3M ATD Part No. 8625, or equivalent

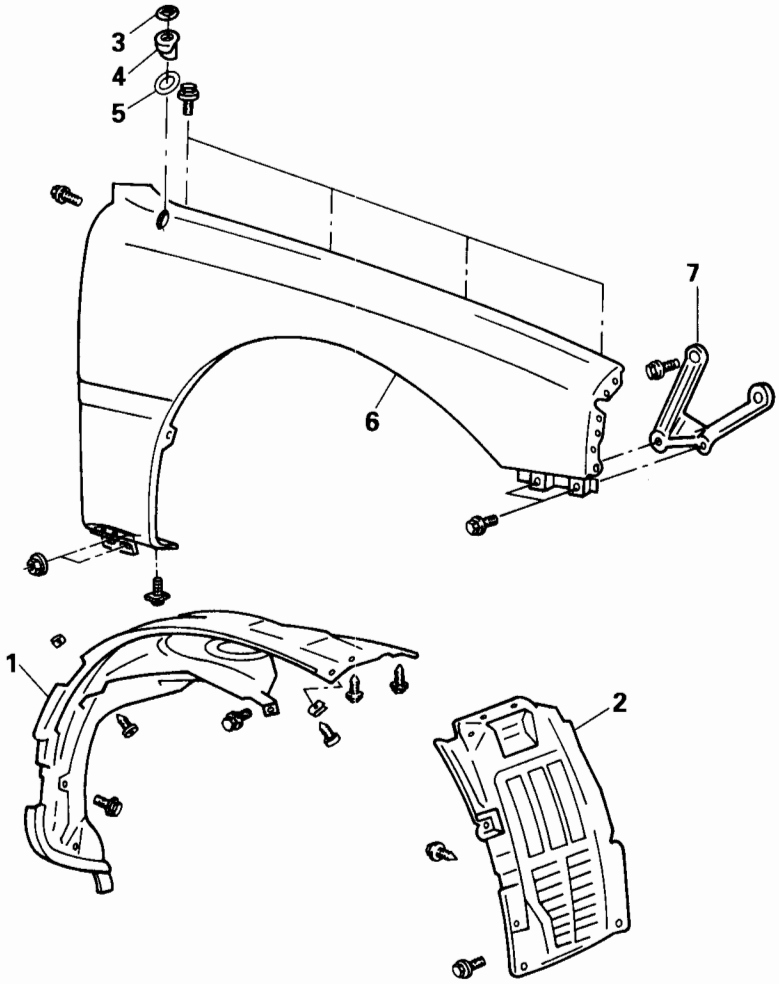

Removal steps

1. Front splash shield
   Side airdam
   (Refer to GROUP 51 - Aero Parts, in the Volume 1 Service Manual.)
2. Front splash shield
   Front burnper
   (Refer to GROUP 51 - Front Bumper, in the Volume 1 Service Manual.)
3. Motor antenna ring nut
   (RH fender only)
4. Motor antenna outer garnish
   (RH fender only)
5. Gasket
6. Front fender panel
7. Front fender bracket

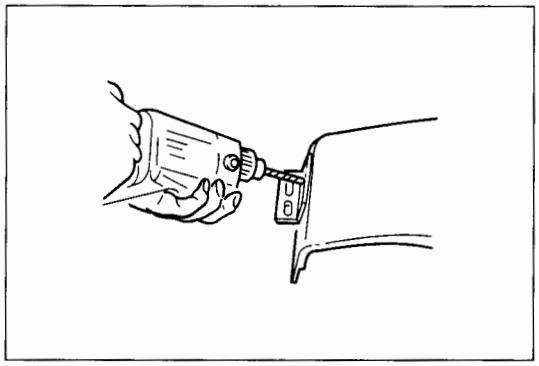

DISASSEMBLY OF LOWER FENDER BRACKET

NOTE
The lower fender bracket can be removed and installed on- or off-car.

1. Remove the two rivets using a drill with a 3/16 in. bit.
2. Apply zinc-rich primer to the rivet holes in the fender, and let dry.

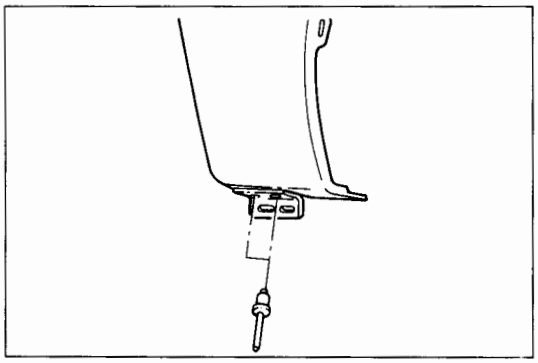

REASSEMBLY OF LOWER FENDER BRACKET

1. Attach the lower fender bracket using two rivets.

   Rivet: 3/16 in. x .125 Flange head

ROOF GLASS

GENERAL

GLASS WIPE, PRIMERS, ADHESIVE AND GLASS INSTALLATION ITEMS

Glass Wipe, Primers, Adhesive and Glass Installation Items	Applications	Quantity
Glass Wipe (Clear) ESSEX SPECIALTY PRODUCTS, INC. brand BETASEAL 43518 glass primer		As required
Glass Primer (Black) ESSEX SPECIALTY PRODUCTS, INC. brand BETASEAL 43520A glass primer		As required
Roof Primer (Black) ESSEX SPECIALTY PRODUCTS, INC. brand BETASEAL 43533 body primer		As required
Glass Moulding Primer ESSEX SPECIALTY PRODUCTS, INC. brand BETASEAL 43555 PVC primer	for installing new moulding, but not glass	As required
Adhesive ESSEX SPECIALTY PRODUCTS, INC. brand BETASEAL 57502 urethane adhesive		Two cartridges
Clean Up - Body and Glass ESSEX SPECIALTY PRODUCTS, INC. brand URETHANE SEALANT CLEANER		As required
Clean Up - Hands ESSEX SPECIALTY PRODUCTS, INC. brand URETHANE E INDUSTRIAL HAND CLEANER		As required
Paint brushes	for glass wipe and primer application	Three
Adhesive gun	for adhesive application	One
Wiping rags	for cleaning jointing surfaces	As required
Glass holder		Two
Roof glass moulding (Service Part)		One
Glass spacers (Service Part)		Four

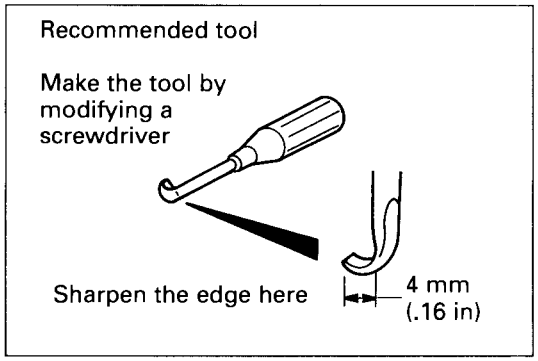

REPLACEMENT OF MOULDING (BONDING TYPE)

1. Remove the moulding by cutting.
2. To cut the existing adhesive, make a tool such as the one shown in the illustration.

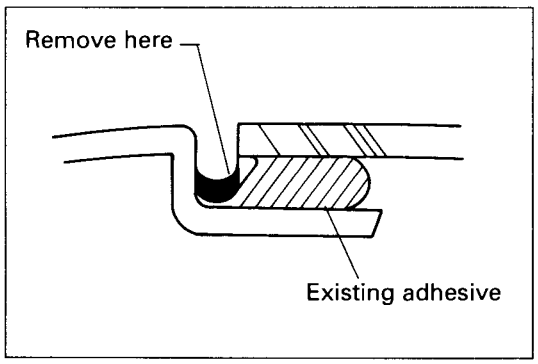

3. Using the tool, scoop out the existing adhesive.

   Caution
   (1) Do not remove existing adhesive more than necessary.
   (2) Use care not to damage the coated surface.
   (3) If the coated surface is damaged, apply paint.

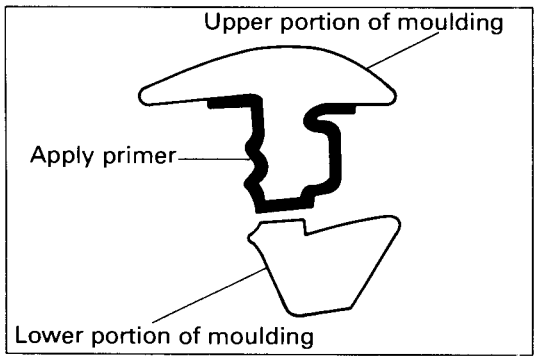

4. Cut off the lower portion of the new moulding and install the moulding temporarily to check that it is seated securely.
5. Wipe the entire moulding with a clean, lint free cloth, dampened with naphtha or BETASEAL Urethane E Sealant Cleaner. **Do not use isopropyl alcohol.**
6. Wipe the groove where the moulding will go with a clean, lint free cloth, dampened with naphtha or BETASEAL Urethane E Sealant Cleaner. **Do not use isopropyl alcohol.**
7. Using a small brush, or suitable applicator, apply BETASEAL 43555 PVC primer to the moulding as shown in the illustration.

   Caution
   Never touch the primer coated surface.

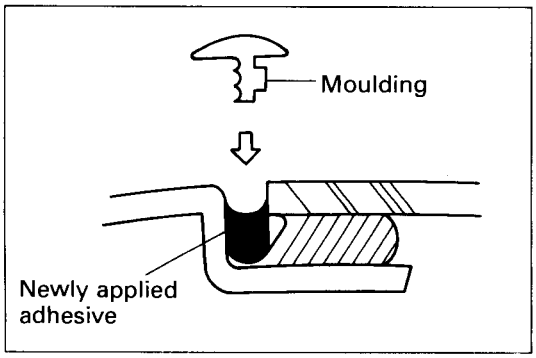

8. Apply BETASEAL 57502 adhesive to the illustrated area and install the moulding before it hardens.
9. Carefully scrape away excess sealant forced out during installation of the moulding from the glass or roof and wipe the surfaces clean with BETASEAL Urethane E Sealant Cleaner.

   NOTE
   It may be necessary to hold the moulding in place with adhesive tape while the adhesive hardens.

Caution
Be sure that adhesive tape will not react with or harm the roof finish due to sunlight or heat. And it can be easily removed without harming the roof finish.

10. Do not move the vehicle for 6-8 hours until the adhesive hardens.

    NOTE
    (1) The adhesive relies on moisture in the air to cure it.
    (2) Inducing curing by wetting the adhesive with water is not recommended, as the moulding creates a seal between the glass and roof.
    (3) DO NOT use a heat source to cure the adhesive.

ROOF GLASS

REMOVAL AND INSTALLATION

Pre-removal and Post-installation Operation
- Removal and Installation of all Rear Roof Panel Headlining (Refer to GROUP 52 - Trims, in this Manual.)
- Removal and Installation of rear portion of Hardtop Weatherstrip (Refer to GROUP 42, in this Manual.)

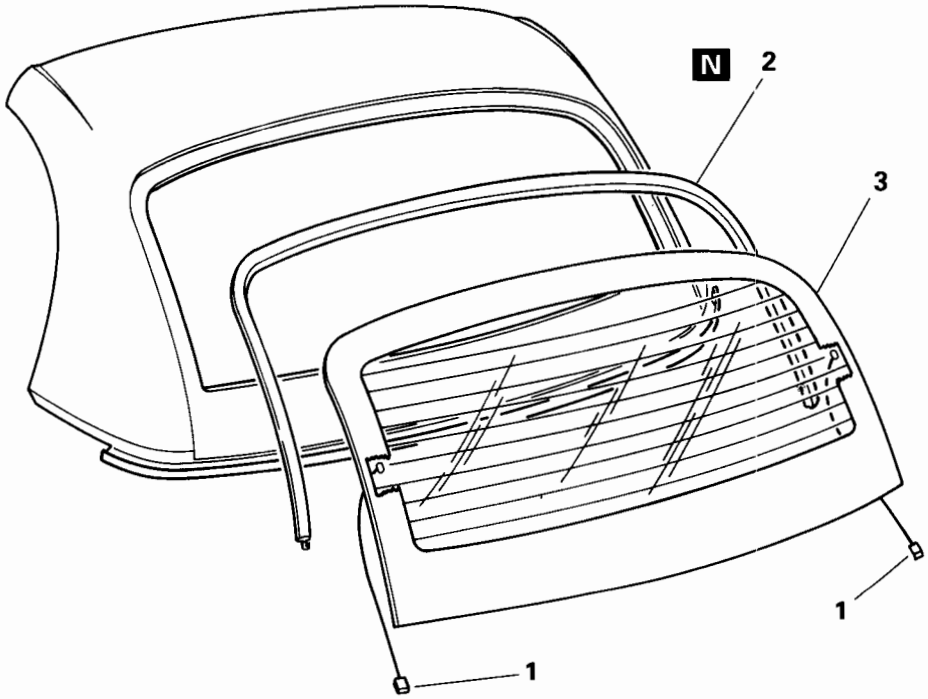

Removal steps

1. Defogger connector
2. Roof glass moulding
3. ◆◆ ◆◆ Roof glass

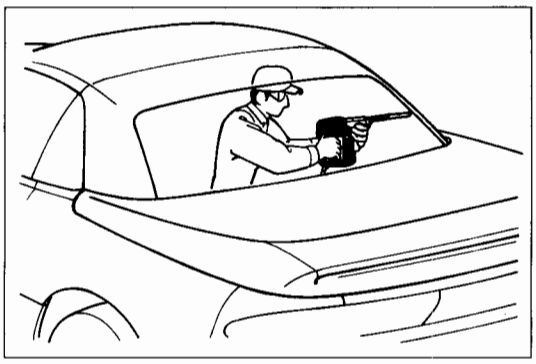

SERVICE POINT OF REMOVAL

3. REMOVAL OF ROOF GLASS

(1) For protection of the body paint, apply cloth tape around the roof glass opening.

(2) Use a pneumatic or electric cold knife (reciprocating blade type) designed for cutting windshields from vehicles.

NOTE
A short blade is recommended for cutting the top and sides, and a longer blade is recommended for the bottom. There are two lines of adhesive along the bottom of the glass.

Caution
1. **Use care not to nick or scratch the blackout on the inside of the roof glass.**
2. **Using the wire cutting method to remove the roof glass is not recommended.**

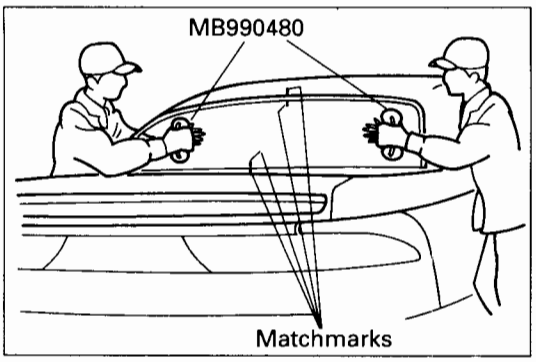

(3) When reusing the glass, put matchmarks on the roof and the glass.

(4) Using the special tool (MB990480, or equivalent), remove the roof glass.

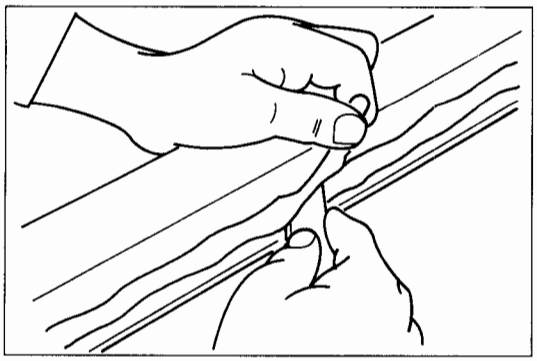

(5) Using a sharp knife, scoop out existing adhesive from the roof flange to 2 mm (.08 in.), all around the roof glass opening.

(6) Finish smooth the flange surfaces.

Caution
1. **Do not remove the adhesive more than necessary.**
2. **Use care not to damage the coated surface of the roof with the knife. If it is damaged, apply touch-up paint.**

(7) If the glass will be reused, scoop out existing adhesive completely from the glass.

Caution
Do not penetrate the adhesive. When the adhesive is penetrated, it is necessary to cover the exposed glass surface with BETASEAL 43520A glass primer. Otherwise, the adhesive will not adhere to the glass.

(8) Clean the glass adhesive surfaces using a clean, lint free cloth dampened with naphtha or BETASEAL Urethane E Sealant Cleaner. **Do not use isopropyl alcohol.**

(9) Clean the roof the same way.

Caution
After cleaning, allow three minutes or more to dry before next work. Do not touch the cleaned surface.

SERVICE POINTS OF INSTALLATION

PREPARATION

When installing or reinstalling the roof glass, refer to the installation headings below.

- **PREPARATION - REINSTALLATION OF ROOF GLASS TO ITS ORIGINAL ROOF, refer to 42-226, in this manual.**
- **PREPARATION - INSTALLATION OF A NEW ROOF GLASS TO A NEW ROOF, refer to 42-227, in this manual.**
- **PREPARATION - INSTALLATION OF A NEW ROOF GLASS TO A REUSED ROOF, refer to 42-228, in this manual.**
- **PREPARATION - INSTALLATION OF A REUSED ROOF GLASS TO A NEW ROOF, refer to 42-229, in this manual.**

Caution
It is strongly advised that when installing a new, or reused roof glass to a new, or reused roof that ONLY BETASEAL chemicals and adhesives as indicated be used. Do not use any other chemicals or adhesives. Always follow the manufacturer's directions. The use of other brands has not been tested for use with, or as a replacement for, BETASEAL products used for the Spyder, and is not recommended.

The BETASEAL adhesive is a moisture-curing type. It relies on moisture in the air to cure the adhesive.

SERVICE POINTS OF INSTALLATION

3. PREPARATION - REINSTALLATION OF ROOF GLASS TO ITS ORIGINAL ROOF

NOTE

(1) Roof glass that has been removed from its original roof, can be reinstalled to the same roof using new BETASEAL 57502 adhesive, without using primers, provided the adhesive on the glass and roof is not dirty or contaminated, and will be reinstalled within 72 hours from when it was originally removed. If the adhesive is dirty or contaminated, it MUST be cleaned with Urethane E Sealant Cleaner. Otherwise, the adhesive will not adhere. Then, reinstall the glass as described below.

(2) When the reused roof glass is reinstalled 72 hours, or more after removal, the adhesive surfaces of the glass and roof panel MUST be cleaned with Urethane E Sealant Cleaner, and BETASEAL 43533 body primer applied to the adhesive surfaces of the roof and glass. Otherwise, the adhesive will not adhere. Then, reinstall the glass as described below.

1. Install the glass to the roof (refer to **GENERAL ROOF GLASS INSTALLATION** 42-230, in this manual).

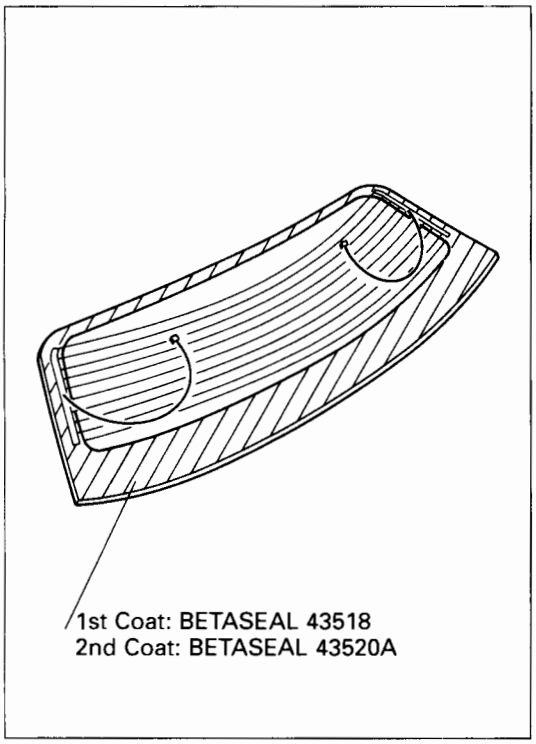

3. PREPARATION - INSTALLATION OF A NEW ROOF GLASS TO A NEW ROOF

(1) Place the new roof glass on a clean, protected work surface. Using a brush or other suitable applicator, prime the roof glass with BETASEAL 43518 glass primer (clear) as shown in the illustration. Immediately after the primer application, wipe the primer from the glass with a clean, lint free cloth. Be sure to leave no streaks or visible residue to assure the thinnest possible coat. Allow to dry for 10 minutes.

NOTE
If the BETASEAL 43520A glass primer (black) is not applied within 30 minutes, the BETASEAL 43518 glass primer (clear) MUST be reapplied and wiped.

(2) Using a brush or suitable applicator, apply BETASEAL 43520A glass primer (black) over the glass primer. Apply the primer 3-5 mils thick to achieve the necessary 1 mil dry thickness. Allow the primer to air-dry to a tack-free condition

NOTE
Provided the primer surface is kept clean, adhesive can be applied within 96 hours.

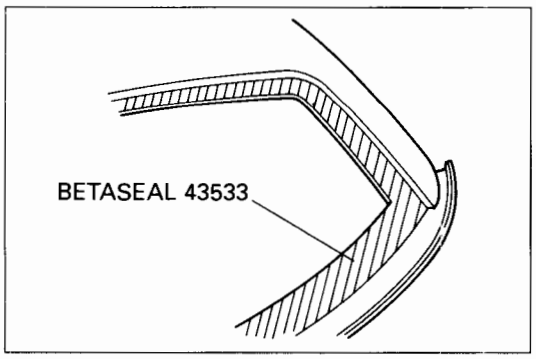

(3) Using a brush or suitable applicator, apply BETASEAL 43533 body primer to the roof glass opening, as shown in the illustration. Apply the primer 3-5 mils thick to achieve the necessary 1 mil dry thickness. Allow the primer to air-dry for at least 15 minutes prior to applying adhesive.

(4) Install the glass to the roof (refer to **GENERAL ROOF GLASS INSTALLATION** 42-230, in this manual).

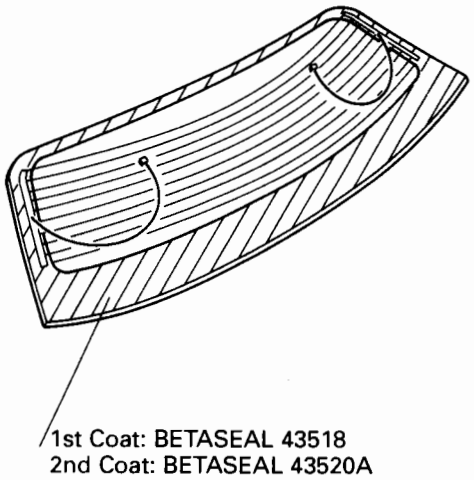

3. PREPARATION - INSTALLATION OF A NEW ROOF GLASS TO A REUSED ROOF

(1) Place the new roof glass on a clean, protected work surface. Using a brush or other suitable applicator, prime the roof glass with BETASEAL 43518 glass primer (clear) as shown in the illustration. Immediately after the primer application, wipe the primer from the glass with a clean, lint free cloth. Be sure to leave no streaks or visible residue to assure the thinnest possible coat. Allow to dry for 10 minutes.

NOTE
If the BETASEAL 43520A glass primer (black) is not applied within 30 minutes, the BETASEAL 43518 glass primer (clear) MUST be reapplied and wiped.

(2) Using a brush or suitable applicator, apply BETASEAL 43520A glass primer (black) over the glass primer. Apply the primer 3-5 mils thick to achieve the necessary 1 mil dry thickness. Allow the primer to air-dry to a tack-free condition.

NOTE
Provided the primer surface is kept clean, adhesive can be applied with 96 hours.

(3) Prepare the reused roof for the roof glass.

NOTE
1. The roof does not require preparation, provided the adhesive on the roof is not dirty or contaminated, and the glass will be reinstalled within 72 hours from when it was removed. If the adhesive is dirty or contaminated, it MUST be cleaned with Urethane E Sealant Cleaner. Otherwise, the adhesive will not adhere. Then, install the glass as described below.
(2) When the new roof glass is installed 72 hours, or more after removal from the reused roof, the adhesive surfaces of the roof MUST be cleaned with Urethane E Sealant Cleaner, and BETASEAL 43533 body primer applied to the adhesive surfaces of the roof. Otherwise, the adhesive will not adhere. Then, install the glass as described below.

(4) Install the glass to the roof (refer to **GENERAL ROOF GLASS INSTALLATION** 42-230, in this manual).

3. **PREPARATION - INSTALLATION OF A REUSED ROOF GLASS TO A NEW ROOF**

NOTE

(1) Roof glass that has been removed from another roof, can be reinstalled to a new roof using new BETASEAL 57502 adhesive, without using primers on the glass only, provided the adhesive on the glass is not dirty or contaminated, and will be reinstalled within 72 hours from when it was originally removed. If the adhesive is dirty or contaminated, it MUST be cleaned with Urethane E Sealant Cleaner. Otherwise, the adhesive will not adhere. Then, reinstall the glass as described below.

(2) When the reused roof glass is reinstalled 72 hours, or more after it was originally removed, the adhesive surfaces of the glass MUST be cleaned with Urethane E Sealant Cleaner, and BETASEAL 43533 body primer applied to the adhesive surfaces of the roof glass. Otherwise, the adhesive will not adhere. Then, reinstall the glass as described below.

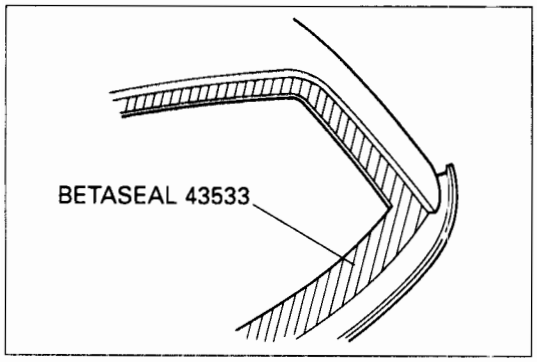

1. Using a brush or suitable applicator, apply BETASEAL 43533 body primer to the roof glass opening, as shown in the illustration. Apply the primer 3-5 mils thick to achieve the necessary 1 mil dry thickness. Allow the primer to air-dry for at least 15 minutes prior to applying adhesive. Then, install the glass as described below.
2. Install the glass to the roof (refer to **GENERAL ROOF GLASS INSTALLATION** 42-230, in this manual).

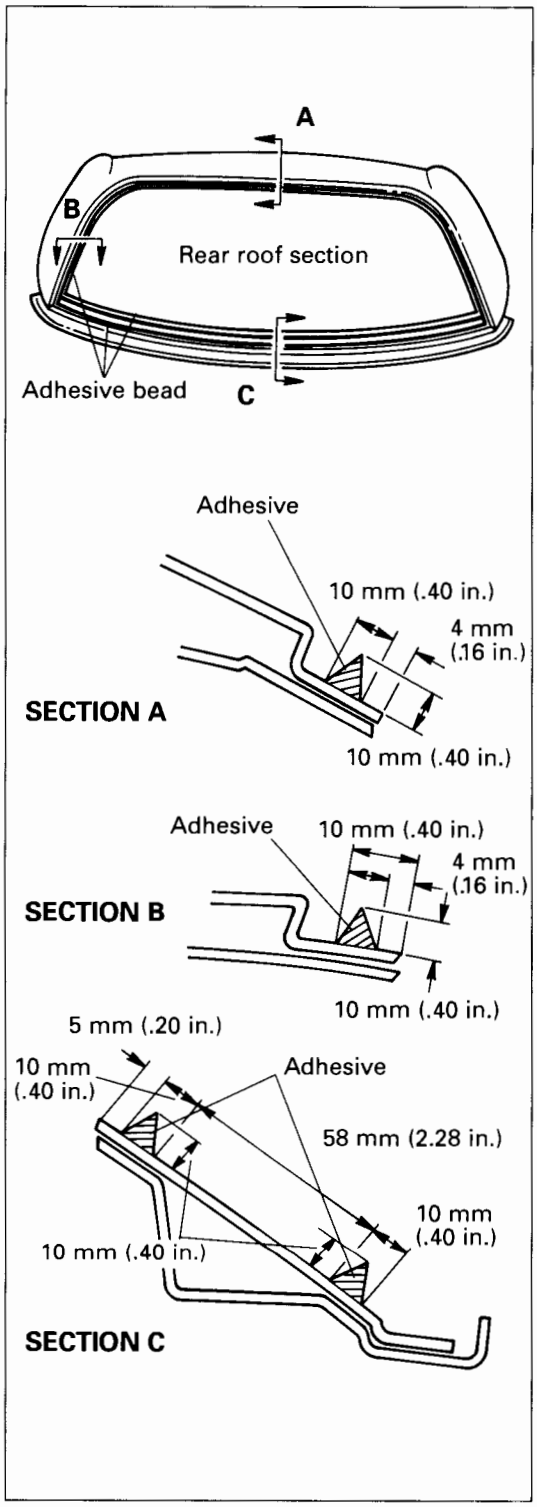

GENERAL ROOF GLASS INSTALLATION

NOTE
Before installing the roof glass, be sure the roof glass and/or the roof have been correctly prepared. Refer to the appropriate heading under **SERVICE POINTS OF INSTALLATION - PREPARATION,** page 42-226, in this manual.

1. Apply a uniform, continuous bead of BETASEAL 57502 adhesive to the roof as shown in the illustration. Start applying the adhesive at lower corner of the roof's valance, go up one side, across the top, down the side, and across the bottom. Connect the sides with a second bead along the top of the valance as shown in the illustration.

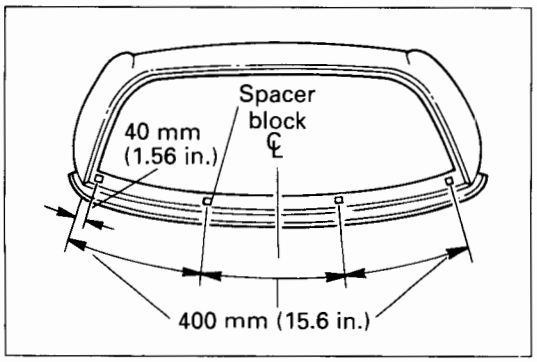

2. Place the four (4) spacer blocks along the bottom line of adhesive as shown in the illustration.

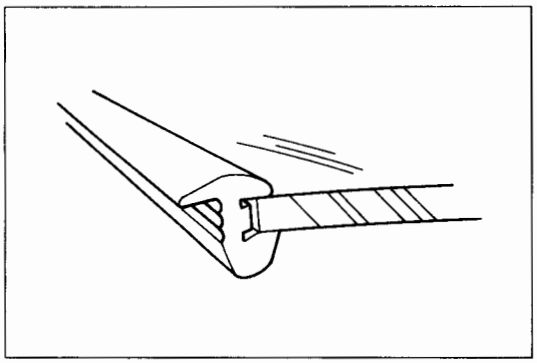

3. Wrap the left, top, and right side of the glass with the new moulding.

   NOTE
   (1) The moulding is easier to work with when it is warmed.
   (2) Do not stretch the moulding around the corners.
   (3) Do not trim the ends of the moulding at this time.

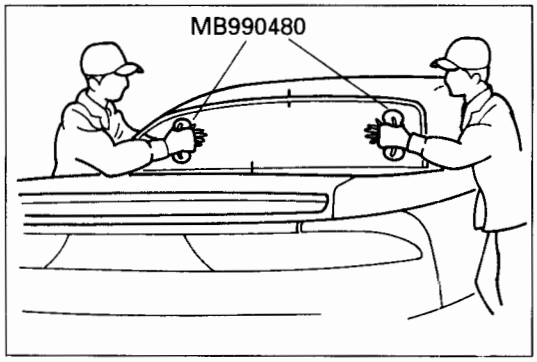

4. Using the special tool (MB990480, or equivalent), install the glass to the roof.
   (1) Align the roof glass to the roof opening at the sides and top. Hinge the glass from the top while keeping constant pressure at the top of the glass, and press the glass into place.
   (2) Check that the glass is flush to the sides and top of the roof, and moulding is not curled outward or deformed.
5. Clean any excess adhesive off the glass, moulding, and roof with Urethane E Sealant Cleaner, and wipe dry.
6. Prepare five 2″ wide x 12″ long pieces of very strong masking tape, having low-stretch characteristics.

   Caution
   Be sure the masking tape will not react with or harm the roof finish due to sunlight or heat. And it should be removed easily without harming the roof finish. The tape will be left on for 24 hours while the adhesive hardens.

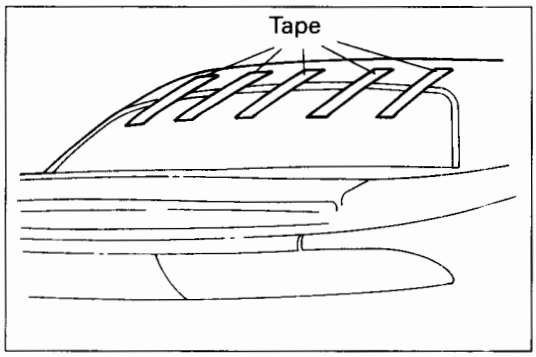

7. Affix the lower half of one piece of tape to the top center of the glass, pull it taut, and secure it to the roof. Affix the remaining pieces equally spaced to the left and right of center the same way.
8. Trim the ends of the moulding 6.5 mm (.25 in.) from the bottom of the glass.
9. Reinstall the hardtop weatherstrip.
10. Close the hard tonneau.

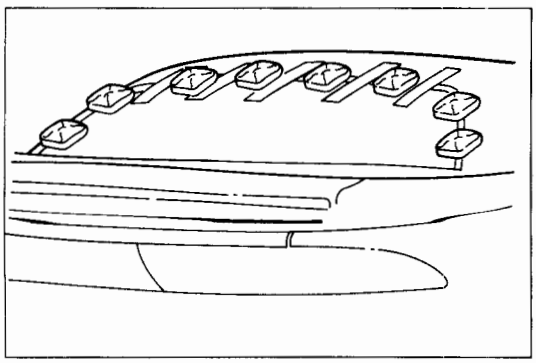

11. Using weighted bags (45.36 Kg [100 lbs.] maximum total), lay them on the moulding to hold the glass and moulding in place, as shown in the illustration. Be sure the weight of the bags do not cause the glass to slide down, or press the glass in. And be sure the moulding is laying flat along the glass and the roof.

12. After installing the roof glass, allow the vehicle to stand at room temperature for 24 hours until the adhesive hardens. DO NOT open the hardtop until the adhesive hardens.

    Caution
    (1) If the vehicle is to be moved, do so gently.
    (2) The adhesive relies on moisture in the air to cure.
    (3) Inducing curing by wetting the adhesive with water is not recommended, as the moulding creates seal between the glass and roof.
    (4) DO NOT use a heat source to cure the adhesive

13. Trim the moulding flush to the bottom edge of the glass.

QUARTER WINDOW

REMOVAL AND INSTALLATION

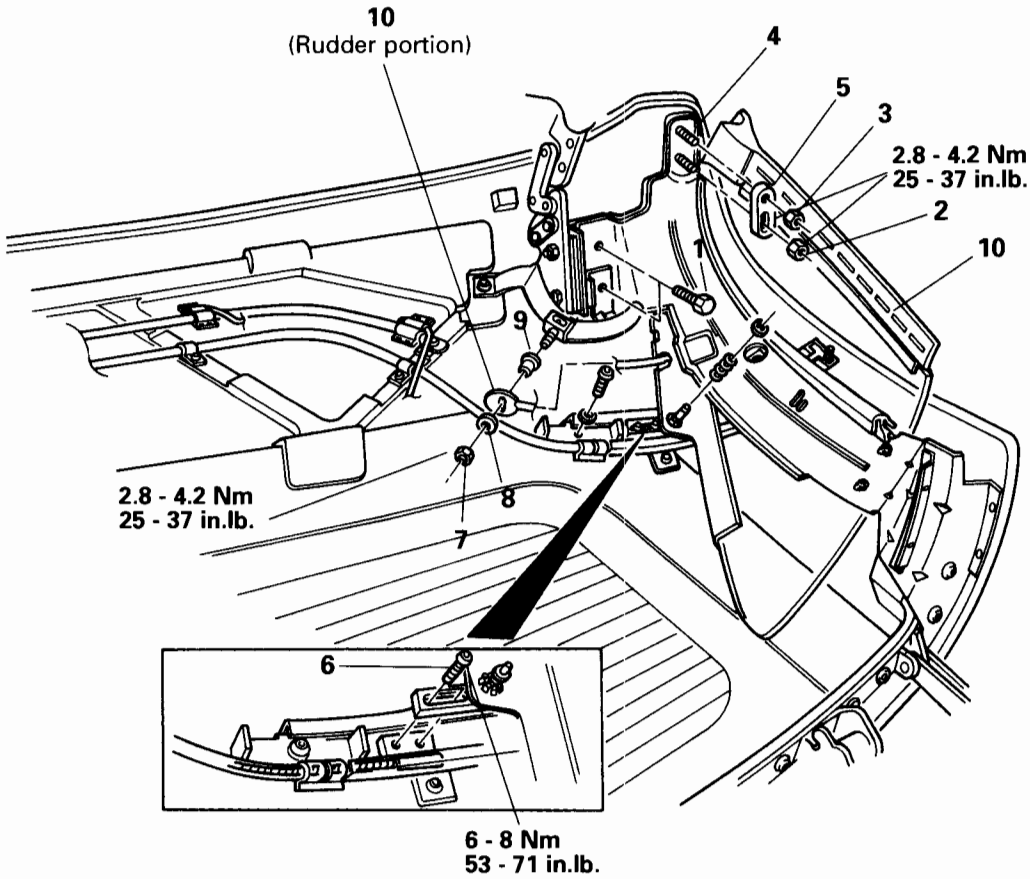

<Quarter window>

Pre-removal Operation
- Removal of Rear and Center Headlining (Refer to GROUP 52, in this Manual.)

Post-installation Operation
- Adjustment of Quarter Window
- Installation of Rear and Center Headlining (Refer to GROUP 52, in this Manual.)

CAUTION:
Adjustment or replacement of this component requires that the hardtop ECU be run through Auto-configuration (Refer to Diagnostics and Testing, in this section).

Quarter window removal steps

1. Bolt
2. Nut
3. Nut
4. ◀▶ ▶◀ Pivot stud
5. Pivot adjustment bracket
6. Bolt
7. Nut
8. Washer
9. Bushing
10. ◀▶ ▶◀ Quarter window

SERVICE POINTS OF REMOVAL

4. REMOVAL OF PIVOT STUD

Using a screwdriver, screw in the stud into the guide plate.

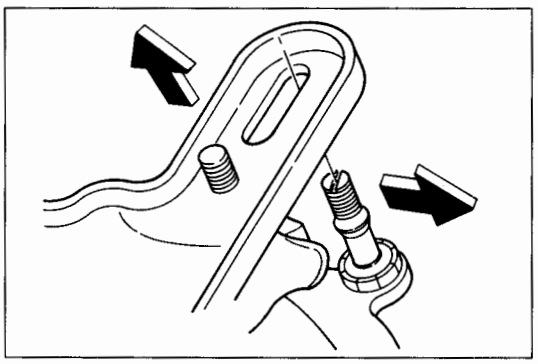

10. REMOVAL OF QUARTER WINDOW

Pull the guide plate away from the roof to remove the quarter window.

SERVICE POINTS OF INSTALLATION

10. INSTALLATION OF QUARTER WINDOW

Pull the guide plate away from the roof to install the quarter window.

4. INSTALLATION OF PIVOT STUD

(1) Using a screwdriver, screw in the stud into the guide plate.
(2) Temporarily install the pivot stud's jam-nut

QUARTER WINDOW

REMOVAL AND INSTALLATION

<Drive cable>

Pre-removal Operation
- Removal of Rear and Center Headlining (Refer to GROUP 52, in this Manual.)

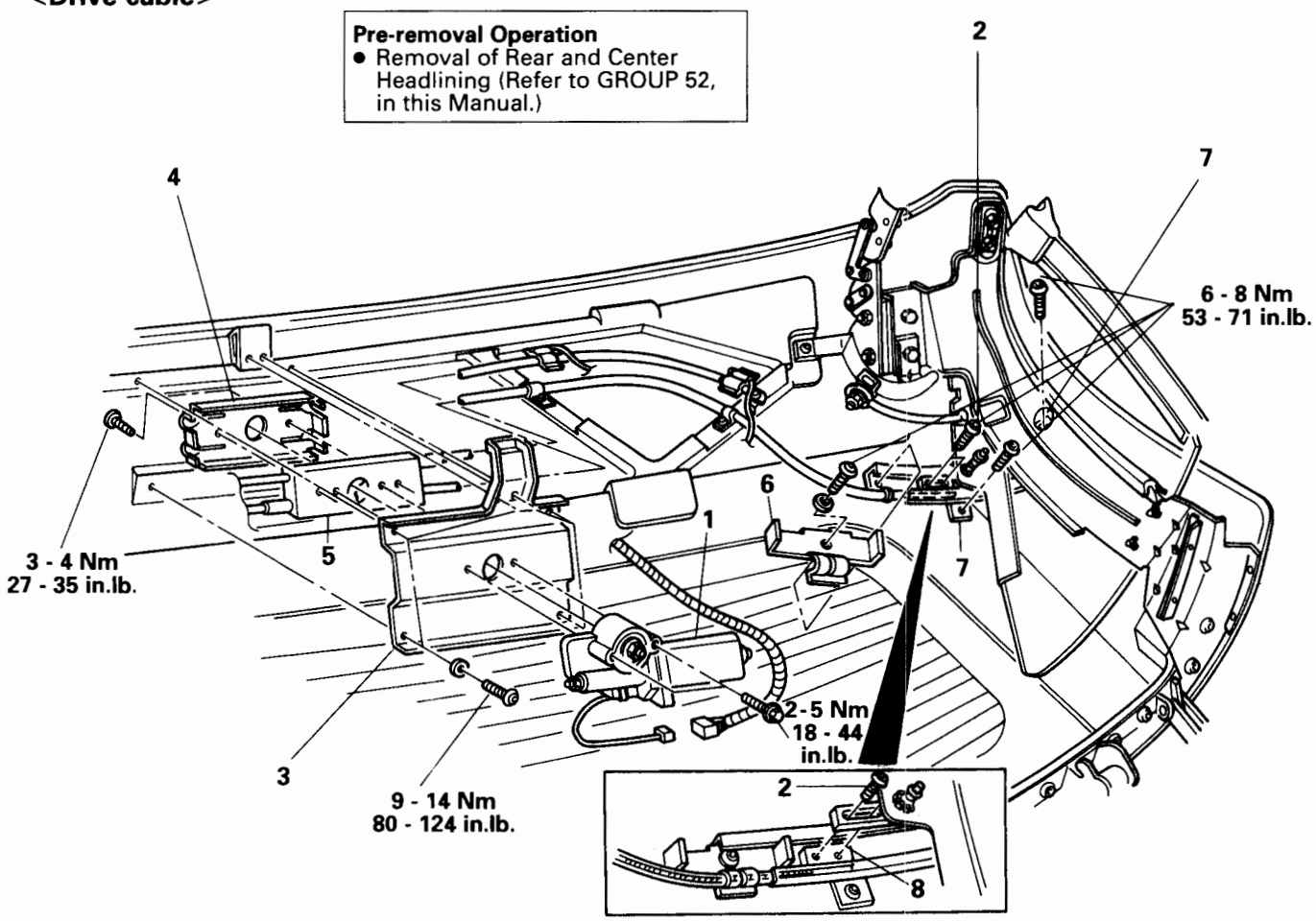

CAUTION:
Adjustment or replacement of this component requires that the hardtop ECU be run through Auto-configuration (Refer to Diagnostics and Testing, in this section.)

Quarter window drive cable removal steps

1. Drive motor
2. Bolt
3. Motor mounting bracket
4. Cable guide cover
5. Cable guide retainer
6. Up stop
7. Drive track
8. Drive cable

Post-installation Operation
- Synchronization of Quarter Window Cables (Refer to SERVICE ADJUSTMENT PROCEDURES, in this section.)
- Adjustment of Quarter Window (Refer to SERVICE ADJUSTMENT PROCEDURES, in this section.)
- Adjustment of Quarter Window Position Sensors (Refer to SERVICE ADJUSTMENT PROCEDURES, in this section.)
- Installation of Rear and Center Headlining (Refer to GROUP 52, in this Manual.)

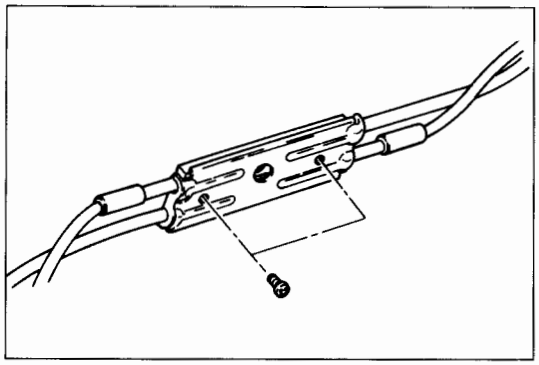

SERVICE POINT OF REMOVAL

4. REMOVAL OF CABLE GUIDE COVER

Twist the cable guide retainer assembly about the cable tubes to access the cable guide cover. Then, remove the cable guide cover.

SERVICE POINTS OF INSTALLATION

4. INSTALLATION OF CABLE GUIDE COVER

Install the cable guide cover, then twist the cable guide retainer assembly to its original position.

1. INSTALLATION OF DRIVE MOTOR

Do not install drive motor at this time. Refer to **SERVICE ADJUSTMENT PROCEDURES - POWER QUARTER WINDOW - SYNCHRONIZATION OF QUARTER WINDOW CABLES,** in this section.

QUARTER WINDOW

REMOVAL AND INSTALLATION

NOTE
Wire ties next to both position sensors must be sufficiently tight to prevent the position sensor from moving longitudinally about the return tube.

<Position sensors>

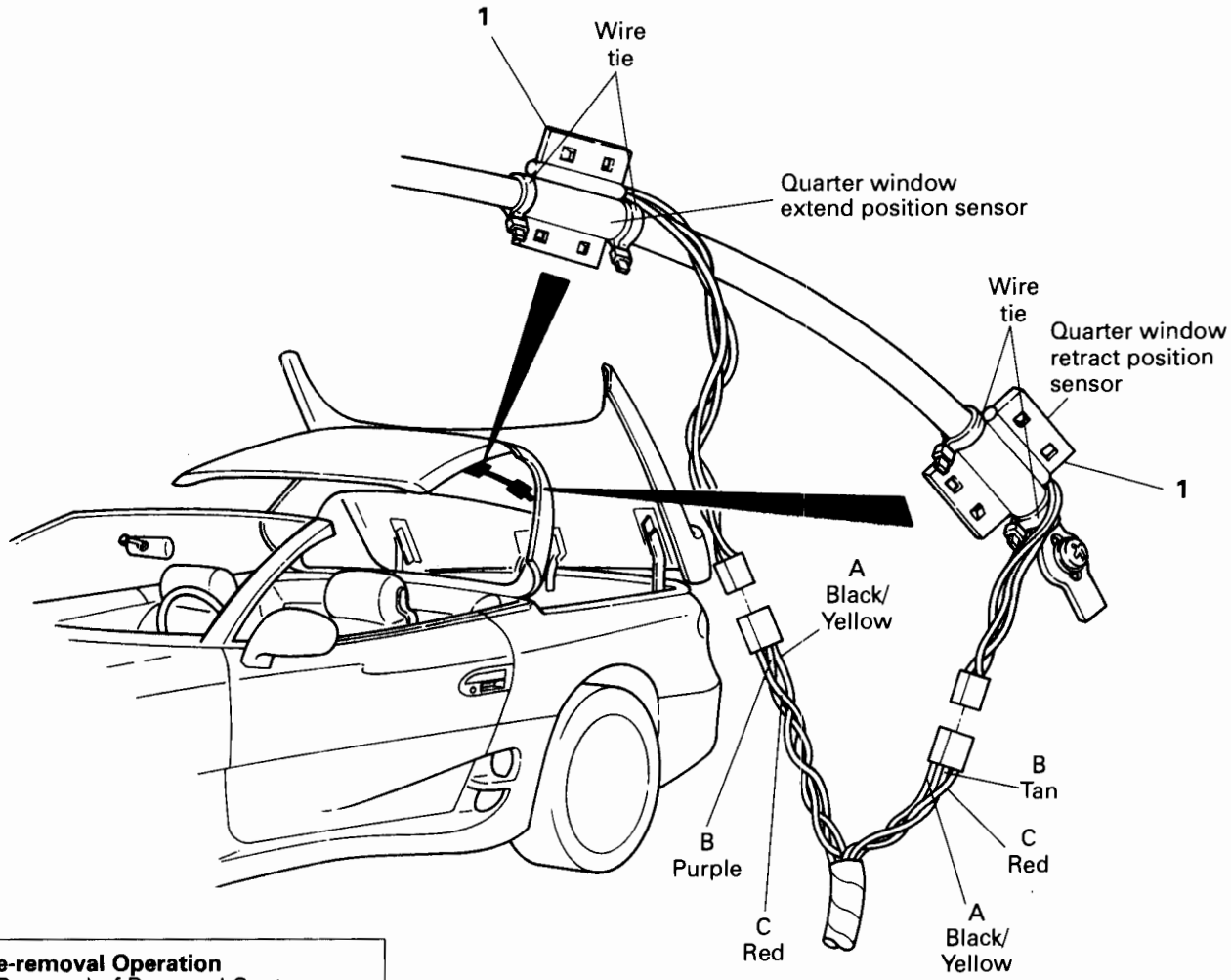

Pre-removal Operation
- Removal of Rear and Center Headlining (Refer to GROUP 52, in this Manual.)

Post-installation Operation
- Adjustment of Quarter Window Position Sensors (Refer to SERVICE ADJUSTMENT PROCEDURES, in this section.)
- Installation of Rear and Center Headlining (Refer to GROUP 52, in this Manual.)

NOTE
1. Label position sensor connectors if the connector positions are known to be correct.
2. If the connectors are not correctly connected the hardtop will not function properly.

Quarter window position sensor removal step

◆■ ■◆ 1. Position sensor

SERVICE POINT OF REMOVAL

1. REMOVAL OF POSITION SENSOR

(1) Disconnect the harness connector.
(2) Separate the sensor holder by unsnapping it and remove the sensor.

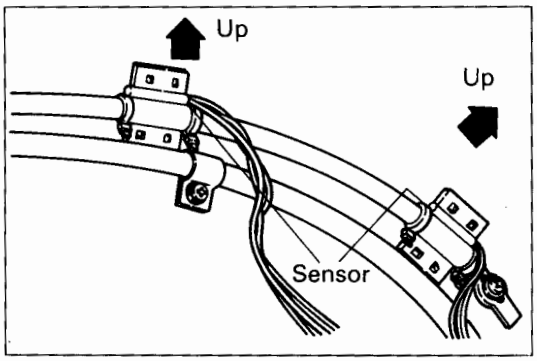

SERVICE POINT OF INSTALLATION

1. INSTALLATION OF POSITION SENSOR

(1) When the position sensor is installed on the return tube it must face up (when the hardtop is halfway open) or forward (when the hardtop is closed).
(2) Adjust the sensor (see **SERVICE ADJUSTMENT PROCEDURES,** in this section).

Caution
The hardtop will not operate properly when the position sensors are incorrectly connected to the harness connectors.

DOOR WINDOW RELAYS

REMOVAL AND INSTALLATION

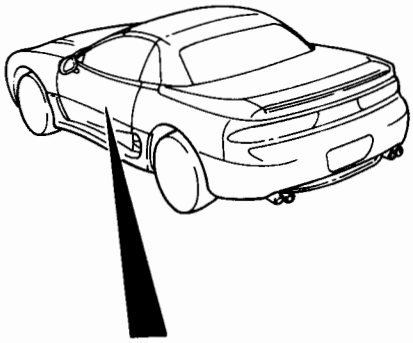

Pre-removal and Post-installation Operation

- Removal and installation of Drivers Side Door Trim Panel (Refer to GROUP 42, in Volume 1.)

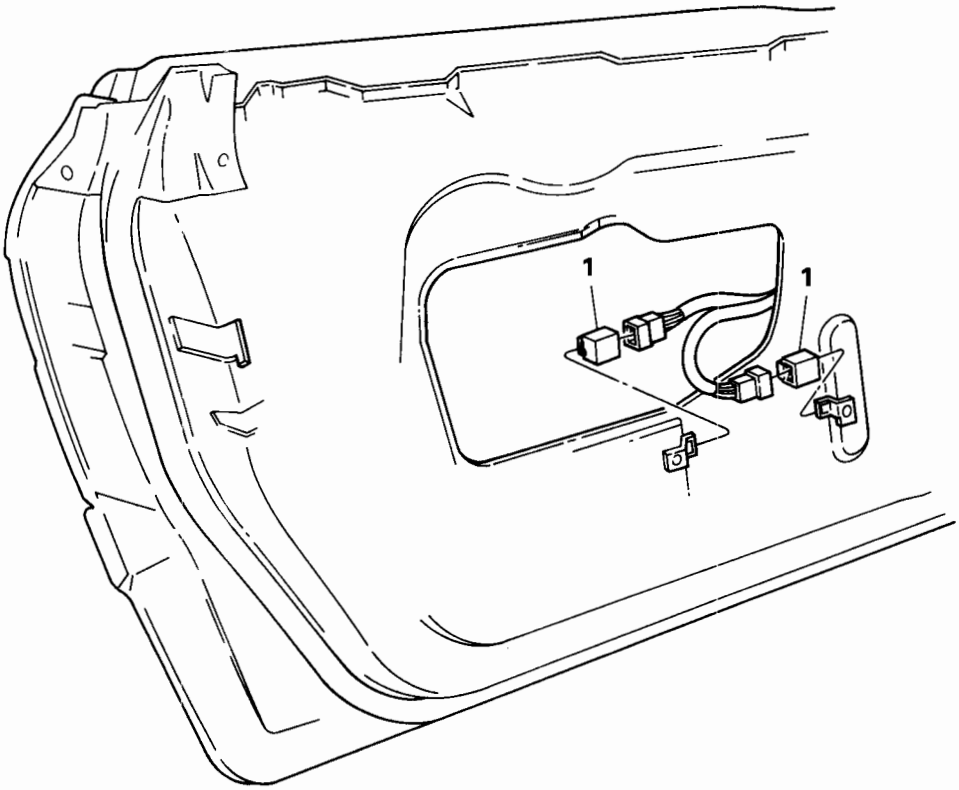

Removal step

1. Relays

DOOR LOCATING PIN AND RECEIVER

REMOVAL AND INSTALLATION

Adjustment
- Door Locating Pin Adjustment (Refer to SERVICE ADJUSTMENT PROCEDURES, in this section.)

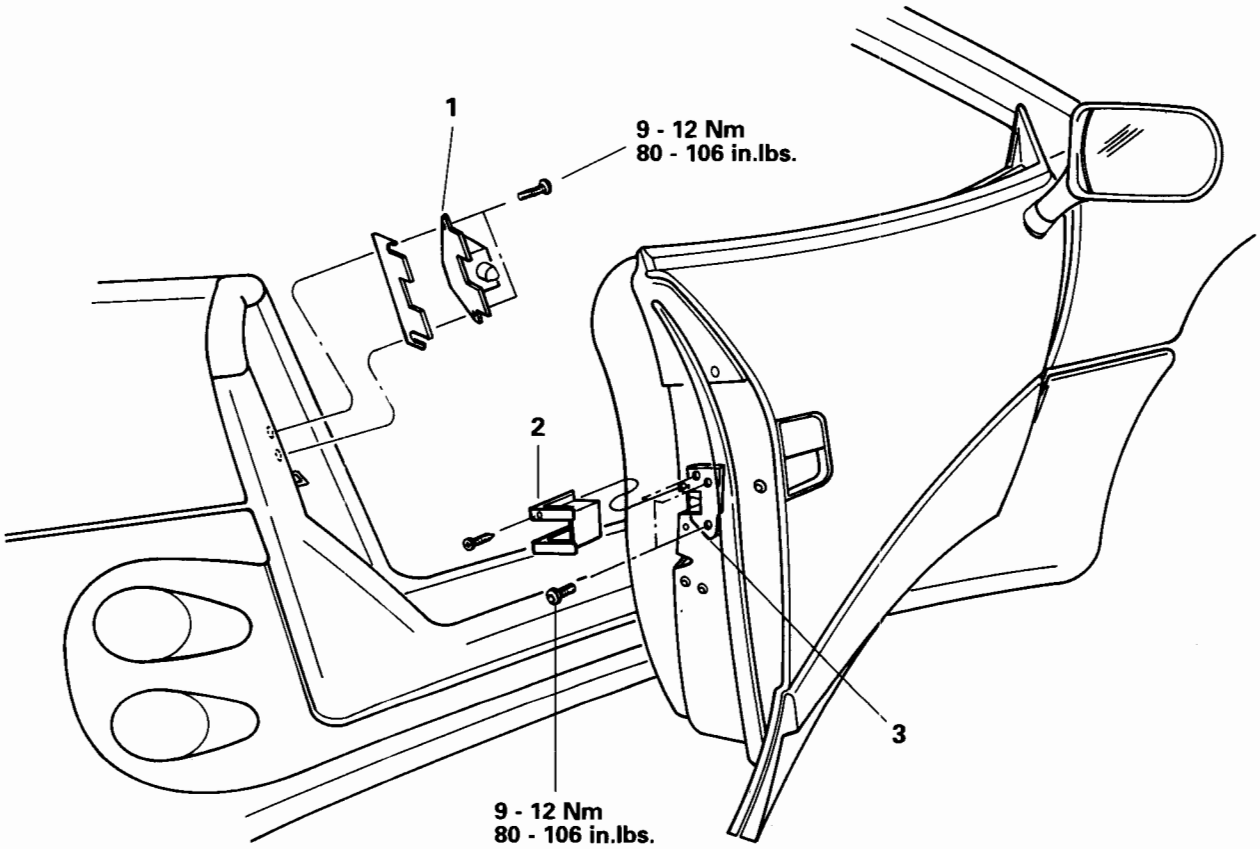

Door locating pin removal steps

◆◆ ◆◆ 1. Locating pin

Door locating pin receiver removal steps

◆◆ ◆◆ 2. Cover
3. Locating pin receiver

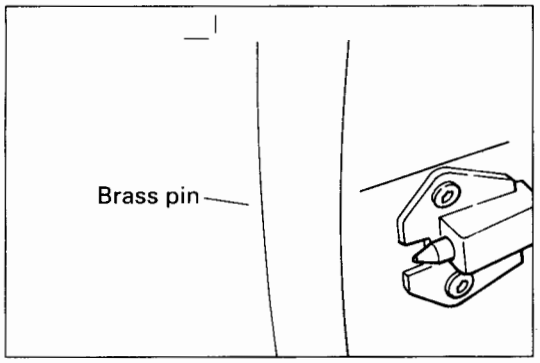

INSPECTION

DOOR LOCATING PIN

Check for wear of the brass pin and looseness of the pin in the carrier body. Excessive wear and/or presence of brass particles indicates poor pin alignment to the receiver.

Standard value: Even wear about the locating pin head

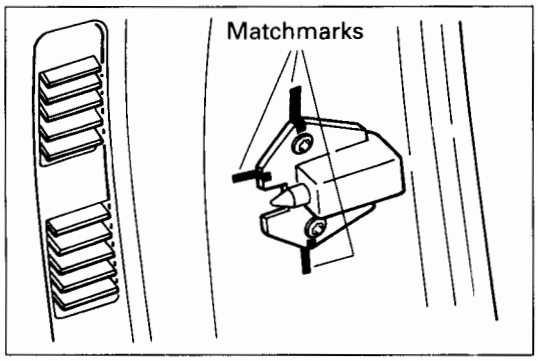

SERVICE POINTS OF REMOVAL

2. REMOVAL OF DOOR LOCATING PIN

Matchmark the locating pin to the vehicle body.

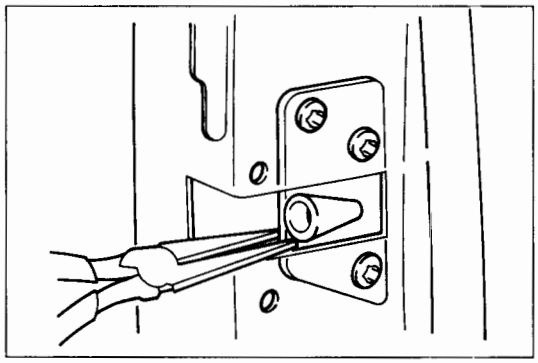

3. REMOVAL OF DOOR LOCATING PIN RECEIVER

Use needle-nose pliers to hold the receiver.

SERVICE POINTS OF INSTALLATION

3. INSTALLATION OF DOOR LOCATING PIN RECEIVER

Use needle-nose pliers to hold the receiver.

2. INSTALLATION OF DOOR LOCATING PIN

If the locating pin location is known to be correct, align the matchmarks. If is not correct, refer to **SERVICE ADJUSTMENT PROCEDURES - DOOR LOCATING PIN.**

WEATHERSTRIP

REMOVAL AND INSTALLATION

CAUTION:
Adjustment or replacement of this component requires that the hardtop ECU be run through Auto-configuration (Refer to Diagnostics and Testing, in this section).

<Windshield header weatherstrip>

Pre-removal and Post-installation Operation
- Removal and Installation of Header Garnish. (Refer to GROUP 52, in this Manual.)
- Open the hardtop for removal and installation of the Windshield Header Weatherstrip.

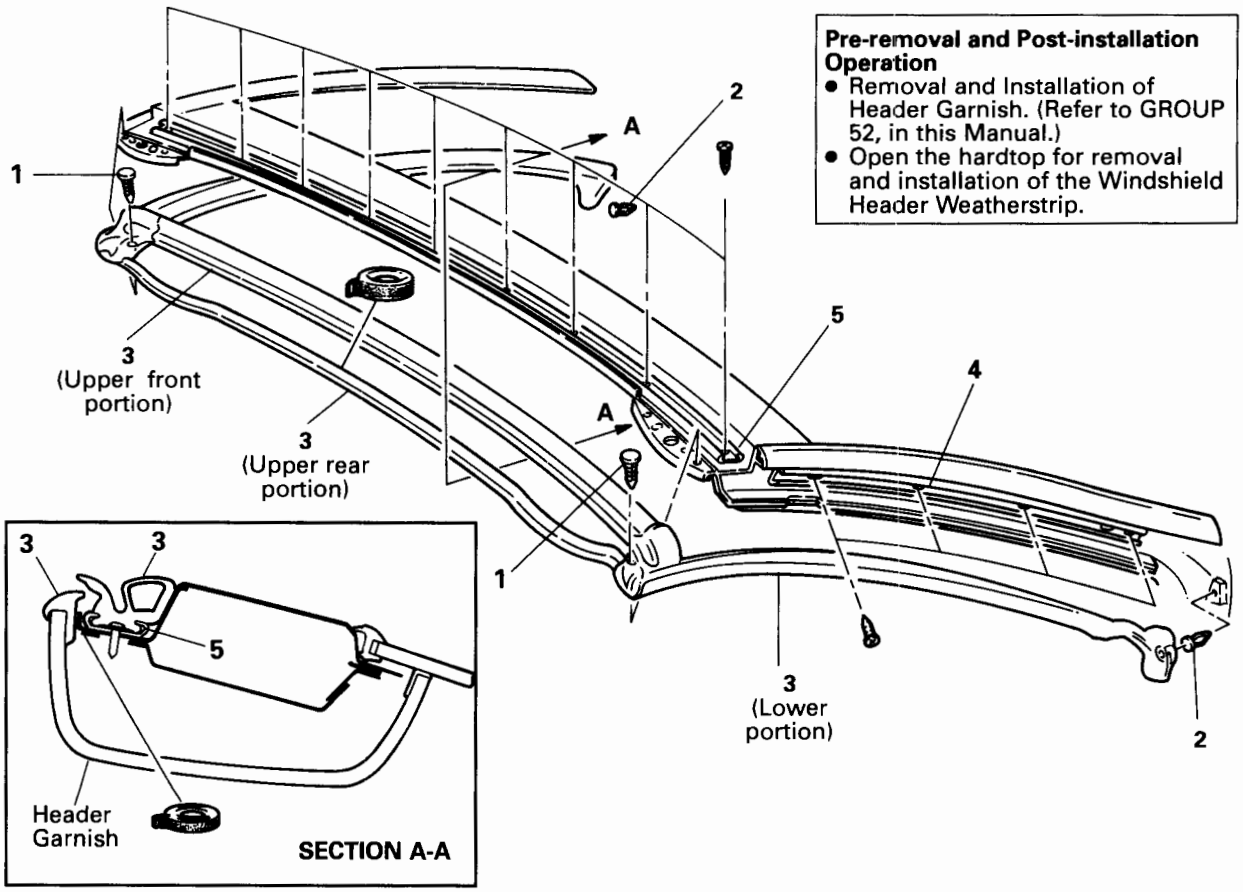

Windshield header weatherstrip removal steps

1. Retainer
2. Retainer
3. Windshield header weatherstrip (upper front, upper rear, and lower portions)

Windshield header weatherstrip holder removal steps

3. Windshield header weatherstrip (upper front portion only)
5. Weatherstrip holder

A-pillar weatherstrip holder removal steps

2. Retainer
3. Windshield header weatherstrip (lower portion only)
4. Weatherstrip holder

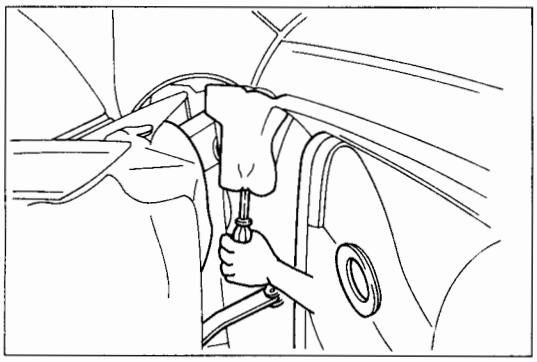

SERVICE POINTS OF REMOVAL

2. REMOVAL OF WEATHERSTRIP RETAINER

Use a small pry tool between the body and weatherstrip to remove the concealed retainer.

3. REMOVAL OF WINDSHIELD HEADER WEATHERSTRIP

(1) Upper rear portion:
If reusing the weatherstrip, carefully separate the weatherstrip and adhesive tape from the backside of the windshield header.

(2) Upper front portion:
Disengage the weatherstrip from the holder.

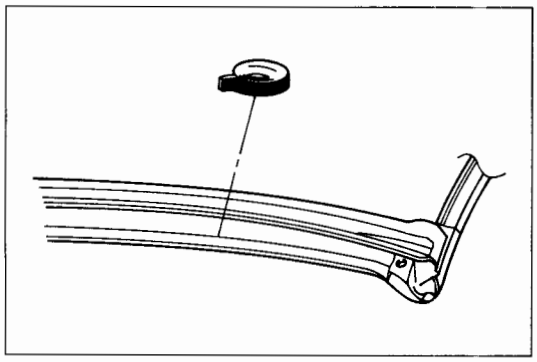

SERVICE POINT OF INSTALLATION

3. INSTALLATION OF WINDSHIELD HEADER WEATHERSTRIP

(1) • If reusing the header weatherstrip:
1. Remove the adhesive tape and residue from the weatherstrip and the header.
2. Apply new 1/4" wide x 1041.4 mm (41 in.) adhesive tape to the weatherstrip as shown in the illustration.
Do not remove the adhesive tape's paper backing at this time.

• If installing a new weatherstrip:
Remove the tape residue from the windshield header.

(2) Attach the upper corners of the weatherstrip with the retainer.

(3) Using a plastic trim tool, and starting in the center and working toward the ends, engage the weatherstrip into the holder.

WEATHERSTRIP

REMOVAL AND INSTALLATION

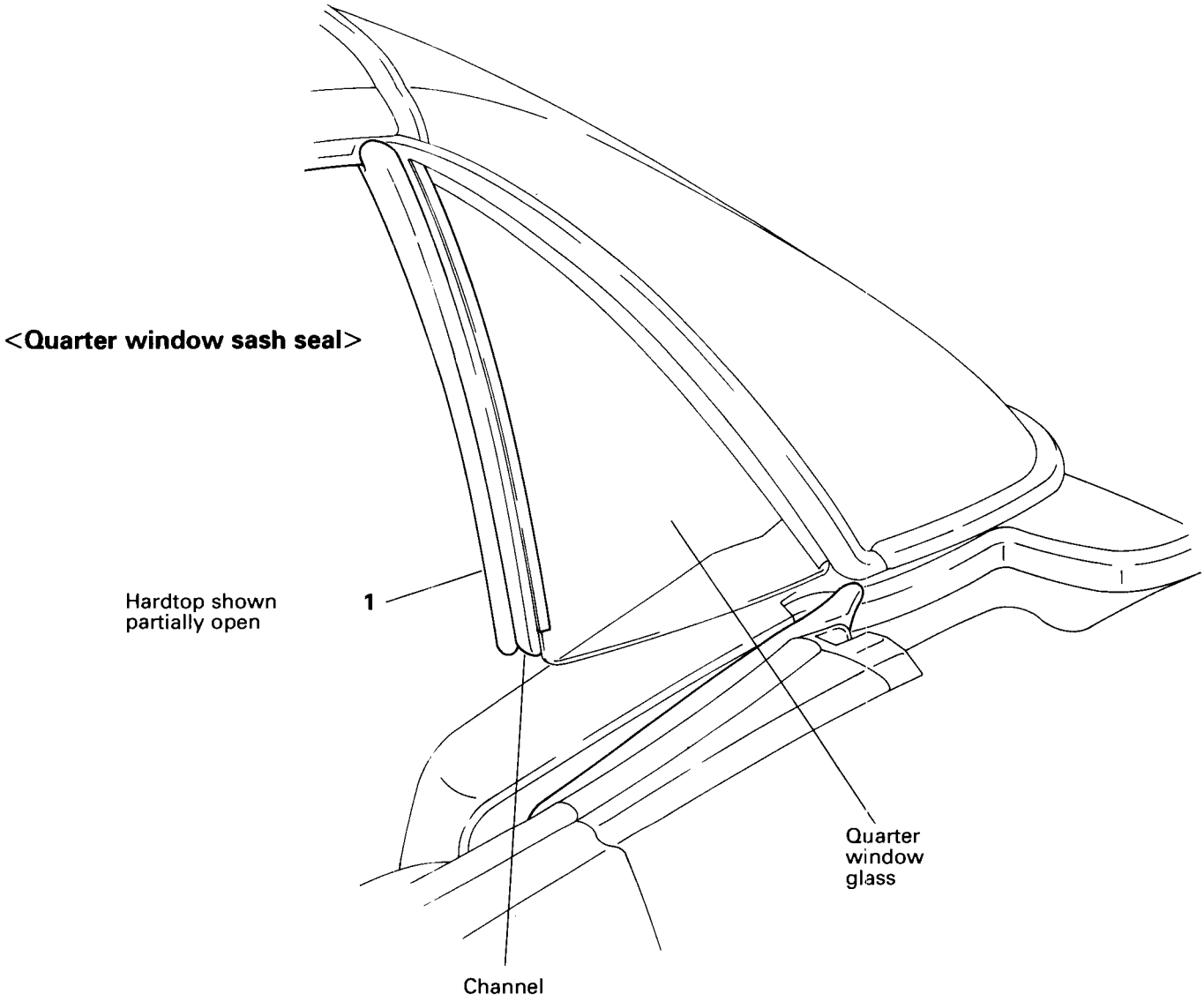

Removal step

◆◆ ◆◆ 1. Quarter window sash seal

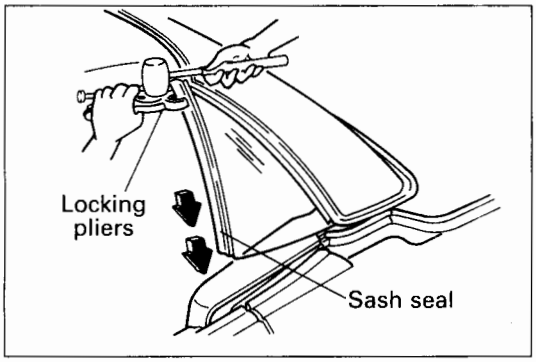

SERVICE POINT OF REMOVAL

1. REMOVAL OF QUARTER WINDOW GLASS SASH SEAL

(1) Manually open the hardtop to a suitable position to allow the sash seal to be removed from the quarter window.
(2) Using locking-pliers, or equivalent, grasp the sash seal near the top of the seal.
(3) Tap on the locking-pliers with a rubber mallet to remove the sash seal.

NOTE
If the seal is difficult to remove, apply or spray penetrating fluid or lubricant between the sash seal and the metal channel attached to the window.

SERVICE POINT OF INSTALLATION

1. INSTALLATION OF QUARTER WINDOW GLASS SASH SEAL

(1) Apply a small amount of lithium-grease to the sash seal before installing it.
(2) Install the seal to the channel only by hand until the groove in the seal stops at the bottom of the channel.

WEATHERSTRIP

REMOVAL AND INSTALLATION

CAUTION:
Adjustment or replacement of this component requires that the hardtop ECU be run through Auto-configuration (Refer to Diagnostics and Testing, in this section).

Pre-removal and Post-installation Operation
- Removal and Installation of LH and RH Quarter Belt Mouldings (Refer to GROUP 51, in this Manual.)
- Removal and Installation of LH and RH Quarter Trim Panels (Refer to GROUP 52, in this Manual.)

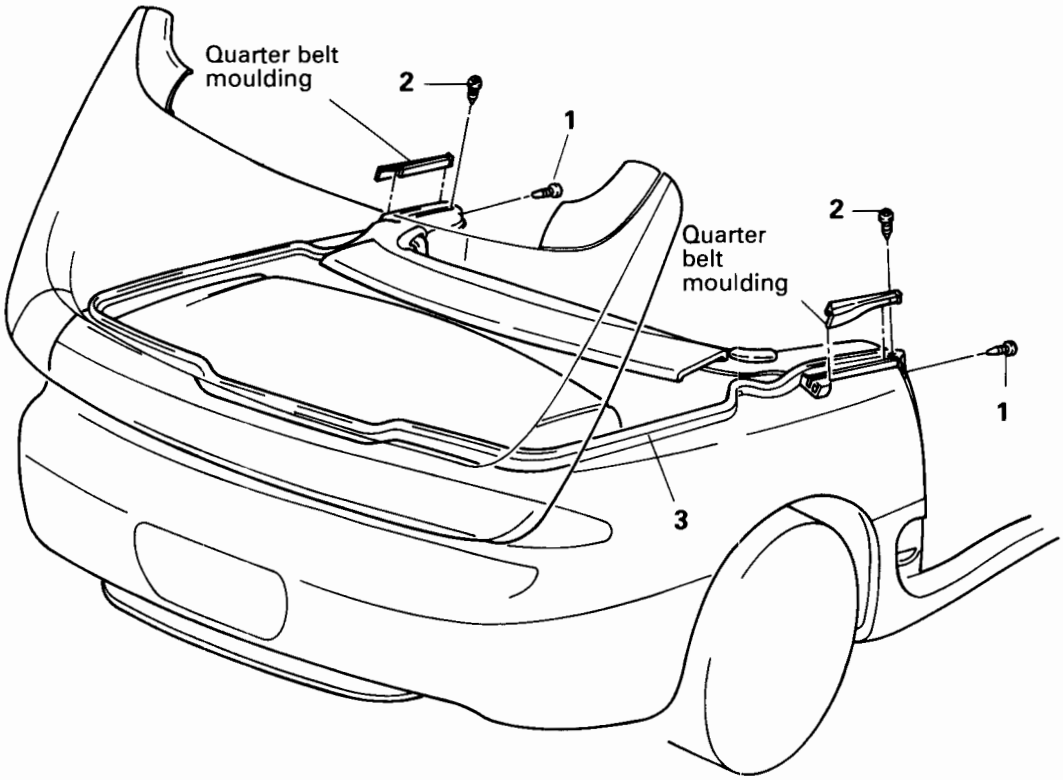

<Hard tonneau weatherstrip>

Removal steps

1. Retainer
2. Screw
◆◆ ◆◆ 3. Weatherstrip

3. REMOVAL OF HARD TONNEAU WEATHERSTRIP

(1) Open the hardtop, and leave the hard tonneau open.
(2) Using a suitable release agent (3M p/n 08971, or equivalent), remove the weatherstrip from the body.

Butyl is also used to make a weatherproof joint where the end of the weatherstrip returns back to the weatherstrip at the quarter window area. Note the location and application of the butyl.

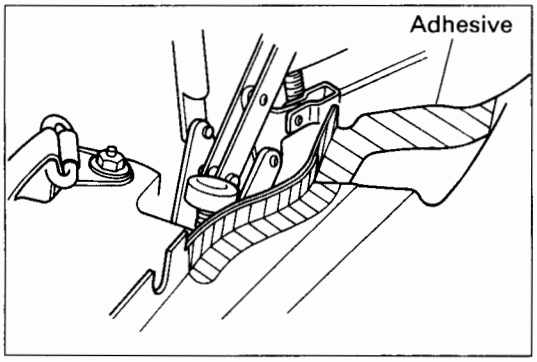

SERVICE POINT OF INSTALLATION

3. INSTALLATION OF HARD TONNEAU WEATHERSTRIP

(1) Apply a continuous bead of adhesive (3M p/n 08008, or equivalent) to the area body as shown in the illustration.
(2) Apply butyl to the free end of the weatherstrip, then join it to the weatherstrip.
(3) Install the ends of the weatherstrip to the body first, then work left to right ending in the center at the rear.

WEATHERSTRIP

REMOVAL AND INSTALLATION

<Front rail weatherstrip>

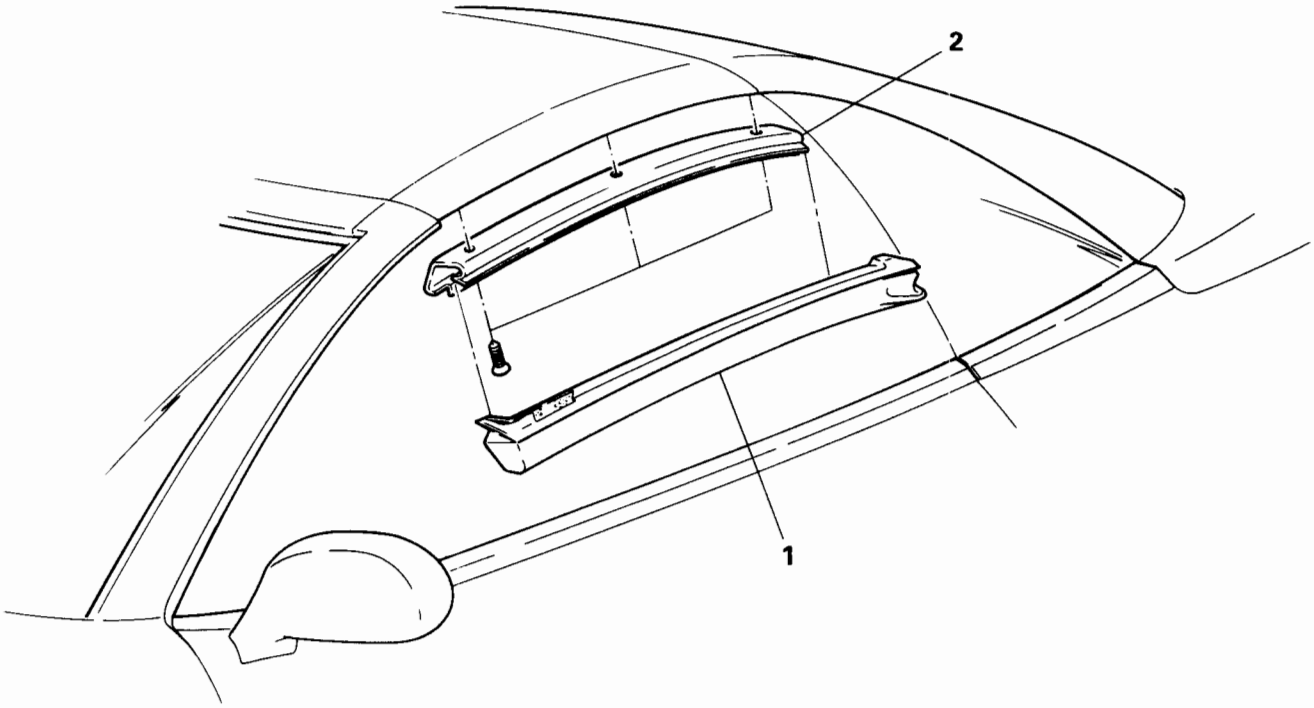

Front rail weatherstrip removal step

1. Weatherstrip

Front rail weatherstrip holder removal steps

1. Weatherstrip
2. Holder

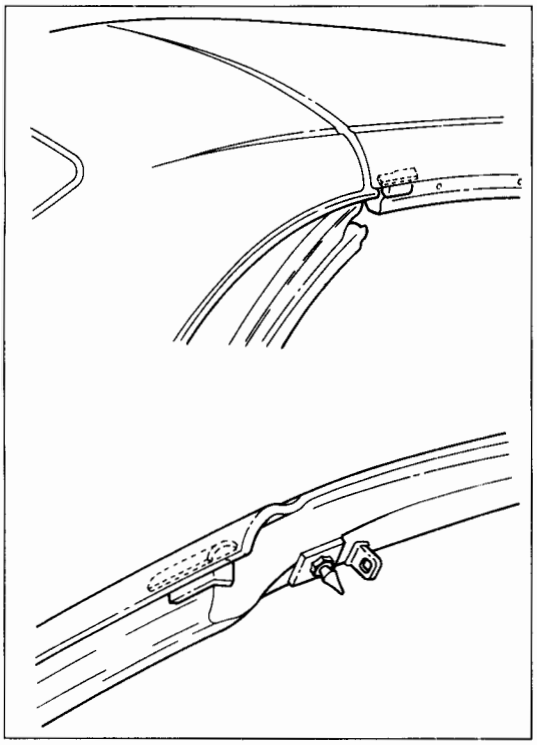

SERVICE POINT OF INSTALLATION

1. INSTALLATION OF FRONT RAIL WEATHERSTRIP

(1) Open the hardtop to a suitable position to install the front rail weatherstrip.

NOTE
Be sure the mating piece of foam tape on the front roof section is in good condition and securely attached. If it is damaged or not attached, wind noise or water leaks may be detected.

(2) Using plastic trim tool, install the weatherstrip into the holder.
(3) Close the hardtop.
(4) Adjust the weatherstrip relationship to the header weatherstrip and hardtop weatherstrip by sliding it in the holder.

Standard value: Equal compression to the header weatherstrip and hardtop weatherstrip.

(5) Open the hardtop halfway, close it, and recheck weatherstrip contact in Step 4.

WEATHERSTRIP

REMOVAL AND INSTALLATION

CAUTION:
Adjustment or replacement of this component requires that the hardtop ECU be run through Auto-configuration (Refer to Diagnostics and Testing, in this section).

<Hardtop weatherstrip>

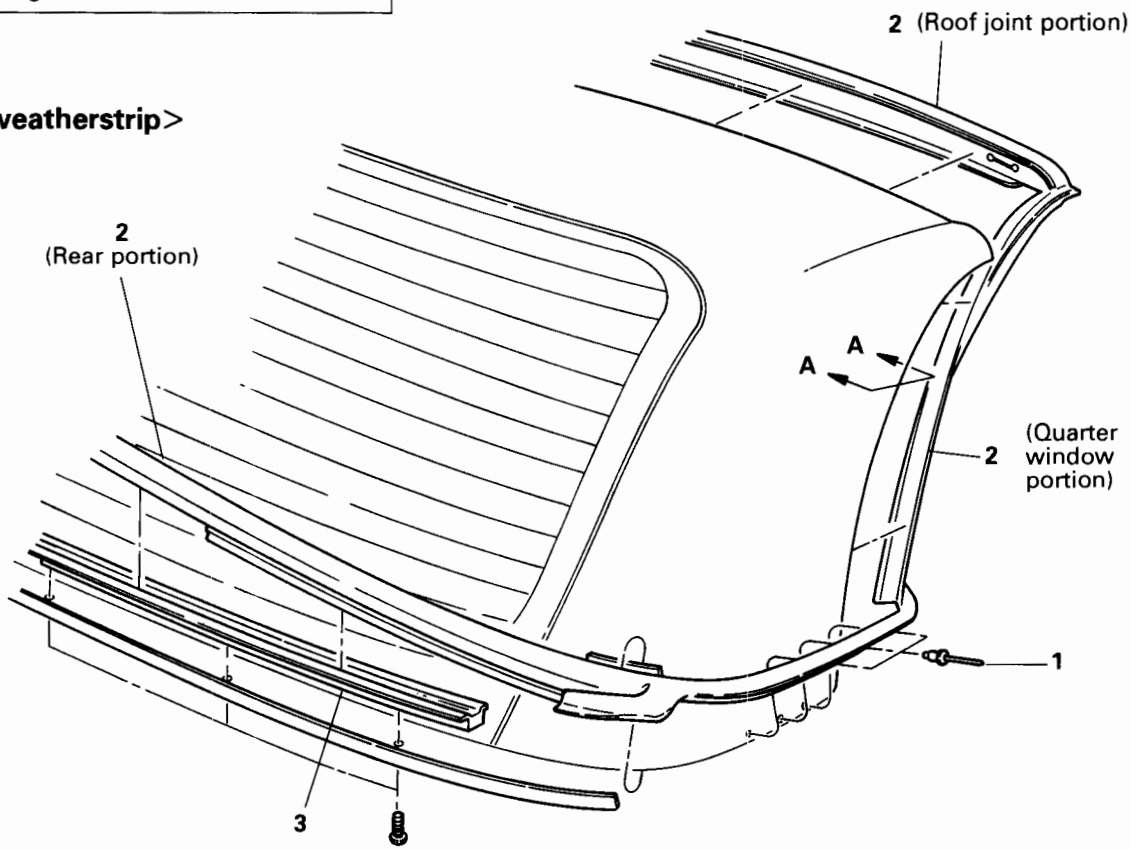

Pre-removal and Post-installation Operation
- Removal and Installation of LH and RH Quarter Windows (Refer to Quarter Window, in this section.)

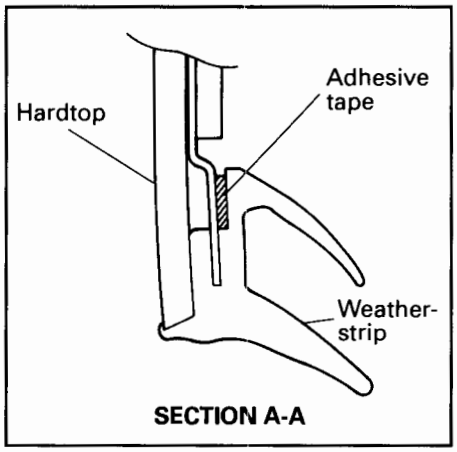

Hardtop weatherstrip removal steps

◆◆ ◆◆ 1. Rivet
◆◆ 2. Weatherstrip

Hardtop weatherstrip holder removal steps

2. Weatherstrip (Rear portion only)
3. Holder

SERVICE POINT OF REMOVAL

1. REMOVAL OF HARDTOP WEATHERSTRIP RIVET

Using a 1/8" diameter drill bit drill out the four rivets from each side.

SERVICE POINT OF INSTALLATION

2. INSTALLATION HARDTOP WEATHERSTRIP

(1) Remove all old tape or glue from weatherstrip attaching surfaces of the hardtop.
(2) Starting at the outboard-most corners of the hardtop rear roof section, and working toward the center, engage the front portion of the weatherstrip to the roof.

NOTE
Be sure the weatherstrip is equally exposed on both corners.

(3) Starting at the sides, and working toward the center, engage the rear portion of the weatherstrip to the holder.
(4) Remove the paper backing from along the quarter window portion on one side only.
(5) Attach the weatherstrip to the hardtop. Using hand-pressure, be sure to work out any bubbles in the adhesive tape.
(6) Repeat for the other side.

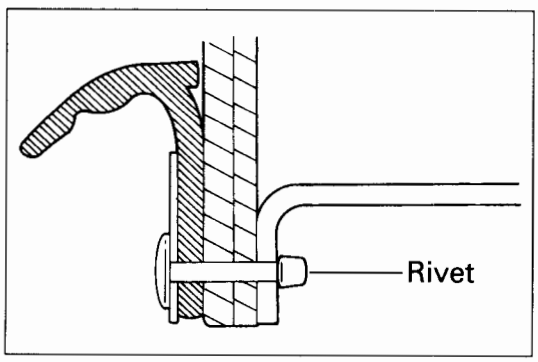

1. INSTALLATION OF HARDTOP WEATHERSTRIP RIVET

Align the bottom quarter window section to the hardtop, and install the four rivets.

Rivet: All aluminum 1/8" x .625 in. Dome head

WEATHERSTRIP

REMOVAL AND INSTALLATION

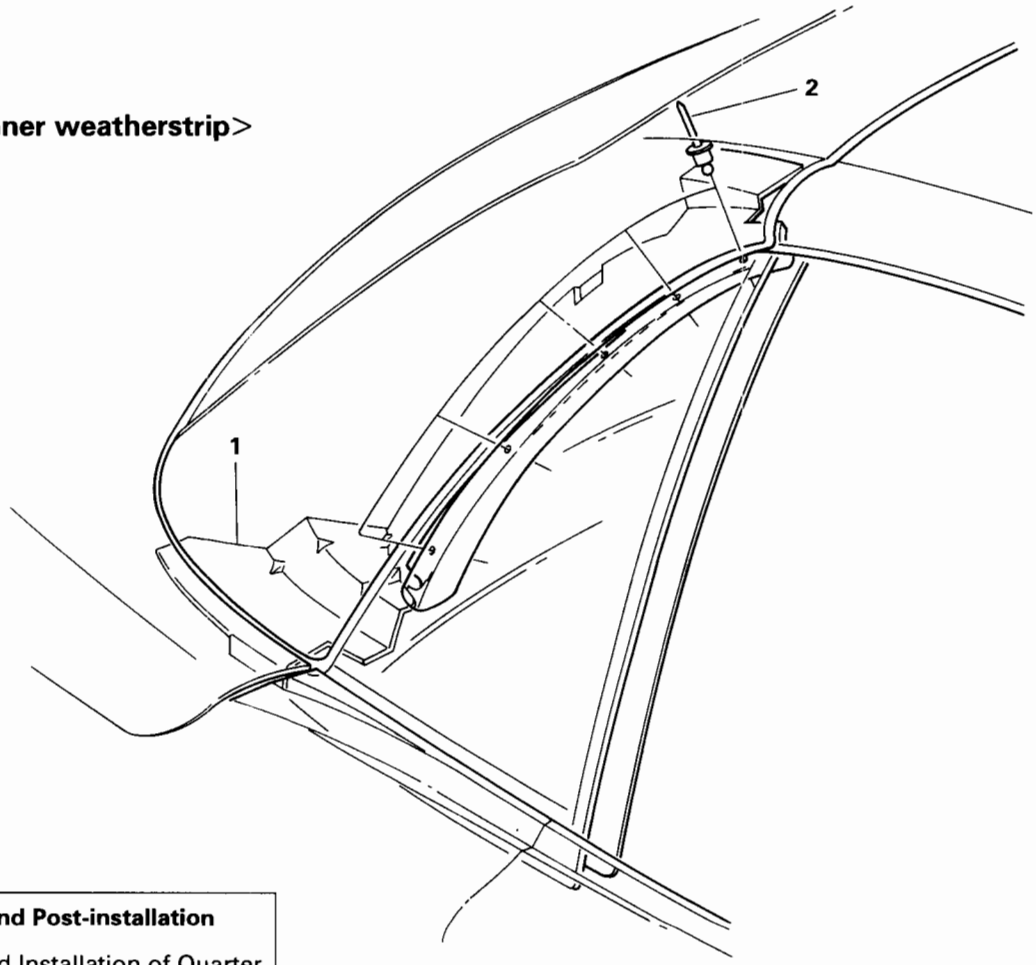

<Rear rail inner weatherstrip>

Pre-removal and Post-installation Operation
- Removal and Installation of Quarter Window (Refer to Quarter Window, in this section.)

Rear rail inner weatherstrip removal step

◆◆ ◆◆ 1. Quarter window guide plate
◆◆ ◆◆ 2. Rivet

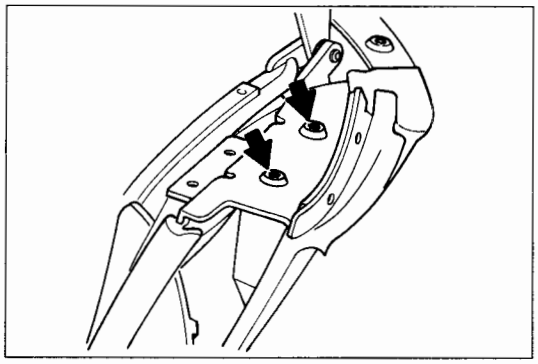

SERVICE POINTS OF REMOVAL

1. REMOVAL OF QUARTER WINDOW GUIDE PLATE

(1) Remove the two rivets attaching the hardtop weatherstrip and the quarter window guide plate to the hardtop using a 1/8″ diameter drill bit.

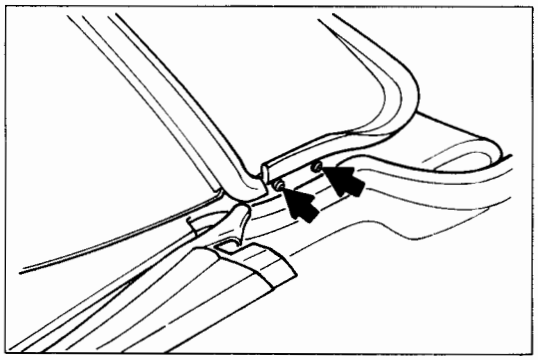

(2) Remove the two bolts attaching the quarter window guide plate to the hardtop.
(3) Separate the quarter window guide plate from the hardtop.

2. REMOVAL OF REAR RAIL INNER WEATHERSTRIP

Using a 1/8″ diameter drill bit drill out the rivets.

SERVICE POINTS OF INSTALLATION

2. INSTALLATION OF REAR RAIL INNER WEATHERSTRIP

Rivet: All aluminum 1/8″ x .250 in. Dome head

1. INSTALLATION OF QUARTER WINDOW GUIDE PLATE

(1) Install the guide plate to the hardtop.
(2) Align the guide plate to the hardtop with the rivet holes and install the rivets.

Rivet: All aluminum 1/8″ x .625 in. Dome head

(3) Install the bolts to attach the guide plate to the hardtop.

Standard value: 9 - 12 Nm (80 - 106 in.lb.)

WINDSHIELD HEADER POWER LATCH SYSTEM

REMOVAL AND INSTALLATION

NOTE
Hardtop must be open before removal.

CAUTION:
Adjustment or replacement of these components requires that the hardtop ECU be run through Auto-configuration (Refer to Diagnostics and Testing, in this section).

Pre-removal Operation
- Removal of Header Garnish (Refer to GROUP 52, in this Manual.)

Post-installation Operation
- Adjustment of Header Latch System (Refer to SERVICE ADJUSTMENT PROCEDURES, in this section.)
- Installation of Header Garnish (Refer to GROUP 52, in this Manual.)

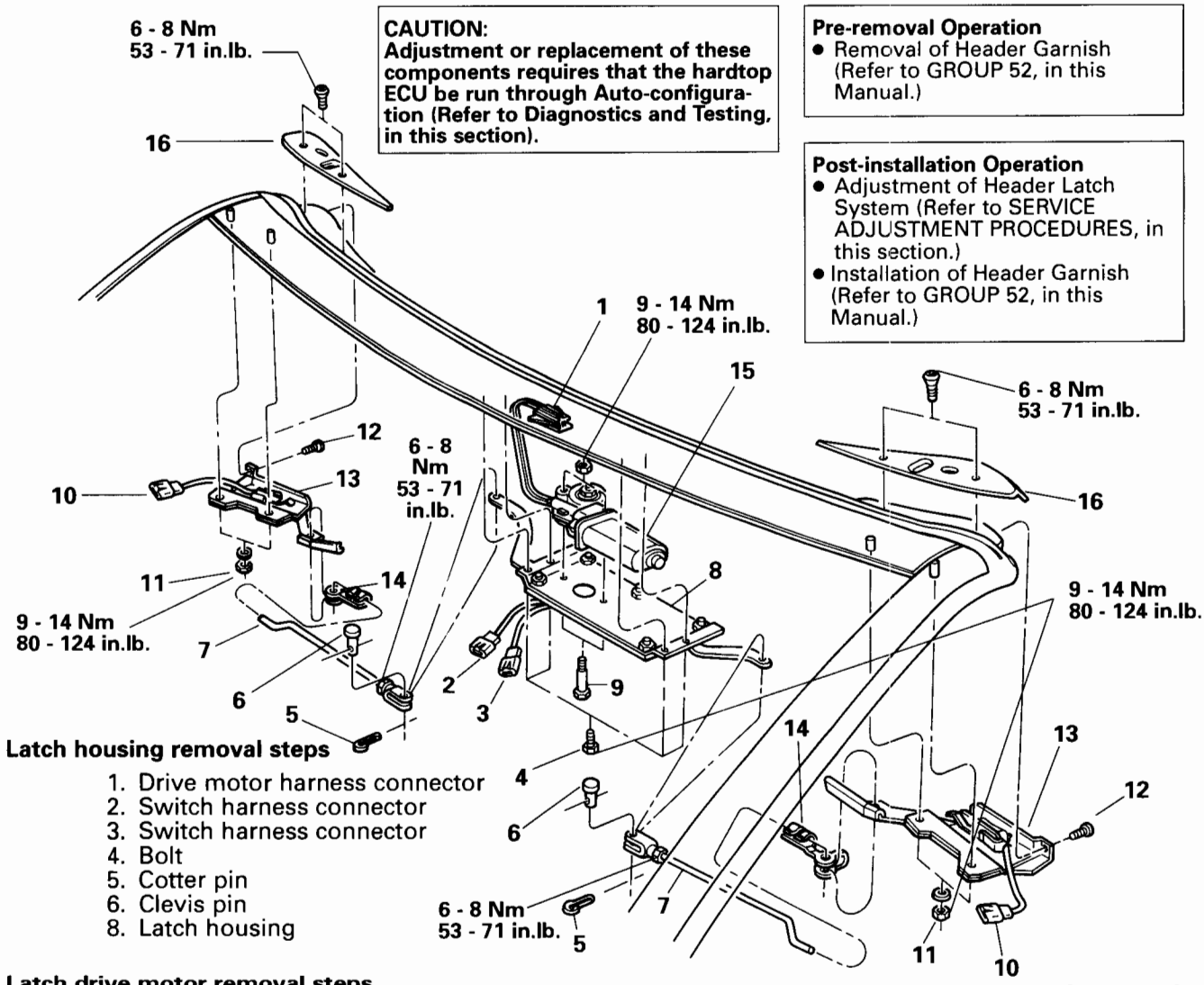

Latch housing removal steps
1. Drive motor harness connector
2. Switch harness connector
3. Switch harness connector
4. Bolt
5. Cotter pin
6. Clevis pin
8. Latch housing

Latch drive motor removal steps
1. Drive motor harness connector
2. Switch harness connector
3. Switch harness connector
4. Bolt
5. Cotter pin
6. Clevis pin
8. Latch housing
9. Bolt
15. Drive motor

Latch removal steps
10. Switch harness connector
11. Nut
12. Screw
13. Latch
14. Clip

Header latch garnish removal step
16. Header latch garnish

Actuator removal steps
7. Actuator
14. Clip

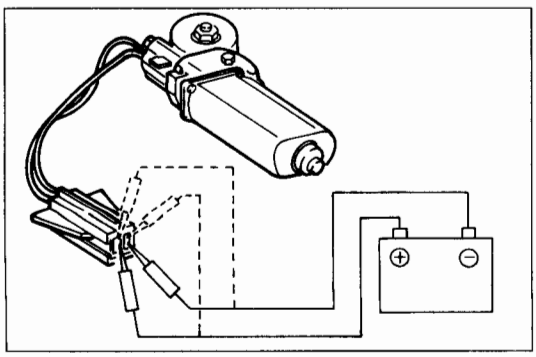

INSPECTION

DRIVE MOTOR

1. Connect the battery directly to the motor connector and check that the motor spins freely.
2. Reverse the polarity and check that the motor spins freely in the opposite direction.

Standard value: Motor spins freely without ratcheting, clicking or whining.

TSB Revision

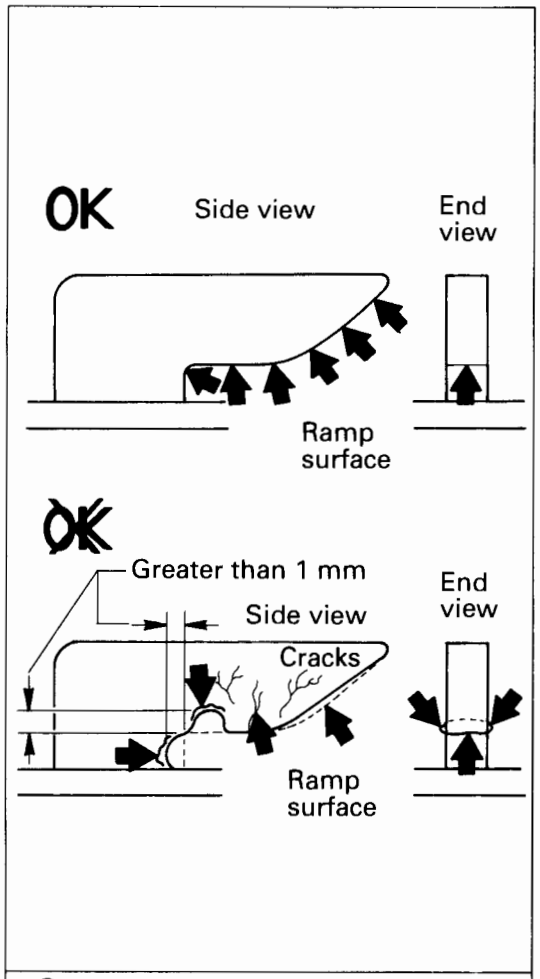

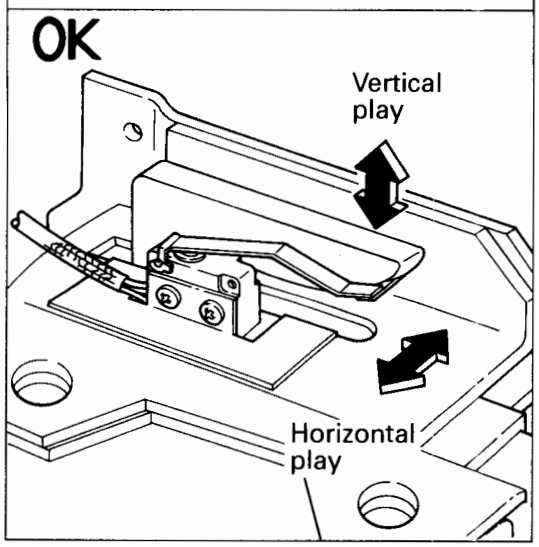

ON-CAR LATCH INSPECTION

1. Open the retractable hardtop.
2. Remove the left and right header latch garnishes.
3. Inspect the ramp surface of both latches for wear or indentation.

   Standard value: Ramp surface flat with no sign of wear penetrating over 1 mm (.039 in.), or cracks to the plastic covering, as shown in the illustration.

   NOTE
   The header latch ramp portion is designed to have some free-play vertically and horizontally within the latch body, and may vary. Excessive play can be compensated for by shimming down the latch body from the windshield header (refer to **SERVICE ADJUSTMENT PROCEDURES,** in this section).

4. Reinstall both header latch garnishes.

WINDSHIELD HEADER POWER LATCH SYSTEM

DISASSEMBLY AND REASSEMBLY

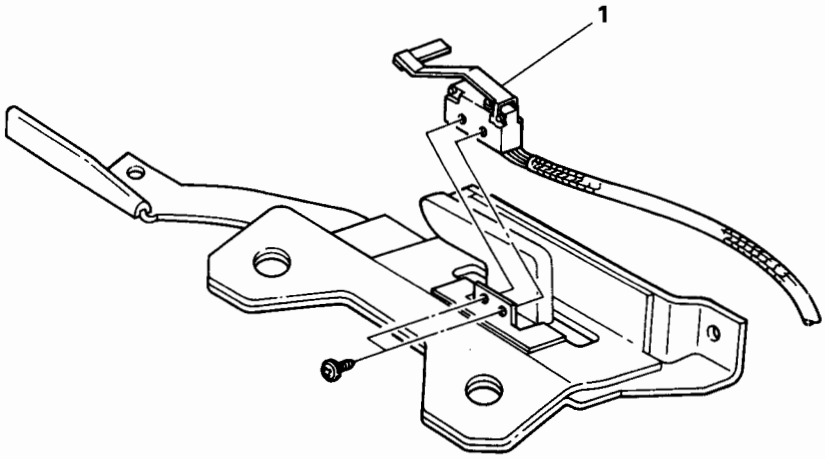

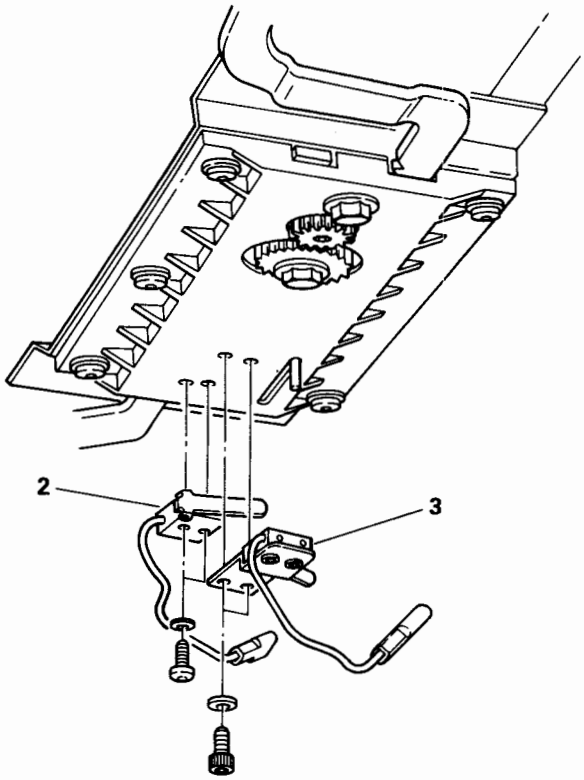

Disassembly steps

1. Position switch
2. Latch switch
3. Unlatch switch

HARDTOP AND HARD TONNEAU CONTROL SWITCH

REMOVAL AND INSTALLATION

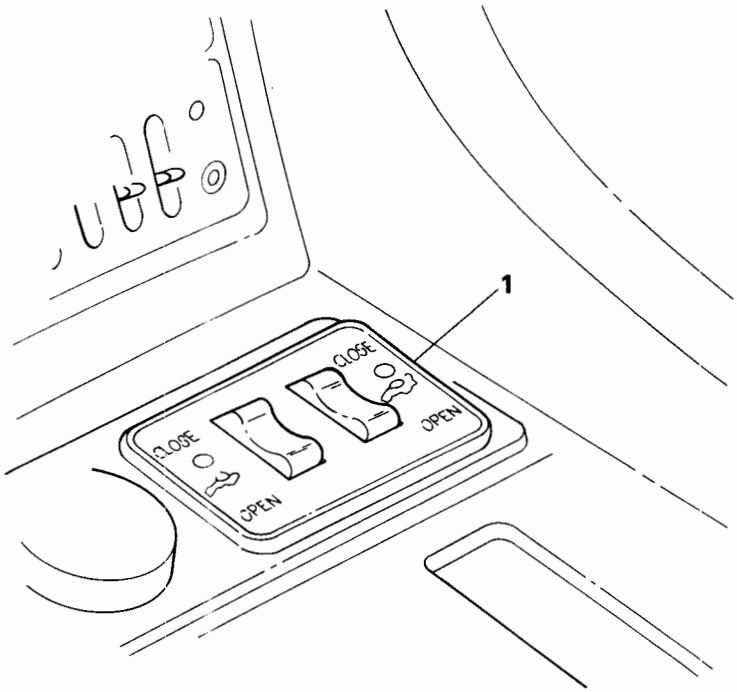

Removal step

1. Switch

INSPECTION

INSPECTION OF HARDTOP AND HARD TONNEAU CONTROL SWITCH

NOTE

(1) When either the hardtop or hard tonneau "CLOSE"/ "OPEN" switch is pressed, and the hardtop or hard tonneau LED blinks, and the chime sounds twice the normal rate, this may indicate there is a system malfunction.

(2) The hardtop ECU will not operate properly, or at all, if battery voltage is less than 10 volts or higher than 16 volts.

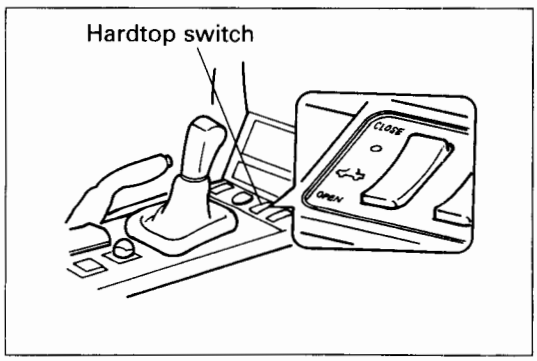

1. ON-CAR INSPECTION

- Set the parking brake.
- Make sure the gear selector lever is in "P" (PARK) (A/T), or neutral (M/T).
- Start the engine.

(1) Press the hardtop switch on the "OPEN" side.

With hardtop initially fully open:

- No response from hardtop system should be noticed when the switch is pressed.

With hardtop initially fully closed:
- The LED to the left of the switch should blink, and the chime sound at a rate of 1 cycle per second. The quarter windows and door windows should open, and the header latches should unlatch.

- If the switch LED appears to be working, but the hardtop system does not respond to the switch inputs, refer to **Diagnostics and Testing** in this section.

- If the switch LED does not appear to be working, and the hardtop system does react to the switch inputs, perform the switch inspection in Step 2.

(2) Press the hardtop switch on the "CLOSED" side.

With hardtop initially fully closed:
- No response should be noticed when the switch is pressed.

With hardtop initially fully open:
- The LED to the left of the switch should blink, and the chime sound at a rate of 1 cycle per second. And, the tonneau latches release.

- If the switch LED appears to be working, but the hardtop system does not respond to the switch inputs, see Diagnostics and Testing in this section.

- If the switch LED does not appear to be working, and the hardtop system does react to the switch inputs, perform the switch inspection in Step 2.

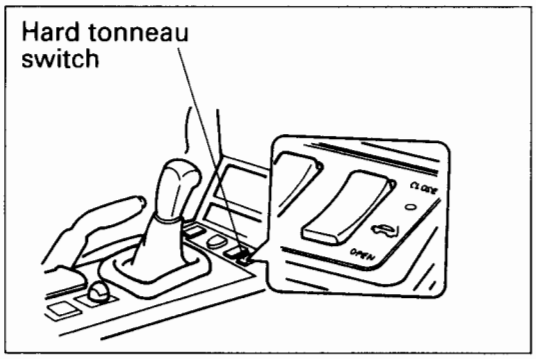

(3) Press the hard tonneau switch on the "CLOSE" side.

With hard tonneau initially fully closed:
- No response should be noticed when the switch is pressed.

With hard tonneau initially fully open:
- The LED to the right of the switch should blink, and the chime sound at a rate of 1 cycle per second. And, the tonneau begin to close.

- If the switch LED appears to be working, but hardtop system does not respond to the switch inputs, refer to **Diagnostics and Testing** in this section.

- If the switch LED does not appear to be working, and the hardtop system does react to the switch inputs, perform the switch inspection in Step 2.

(4) Press the hard tonneau switch on the "OPEN" side.

With hard tonneau initially fully opened:

- No response from hardtop system should be noticed when the switch is pressed.

  NOTE
  Depending on the position of the hard tonneau, the tonneau latches may release again, and the tonneau may continue to open.

With hard tonneau initially fully closed:
- The LED to the right of the switch should blink, and the chime sound at a rate of 1 cycle per second. And, the hard tonneau latches should release.

- If the switch LED appears to be working, but the hardtop system does not respond to the switch inputs, refer to **Diagnostics and Testing** in this section.

- If the switch LED does not appear to be working, and the hardtop system does react to the switch inputs, perform the switch inspection in Step 2.

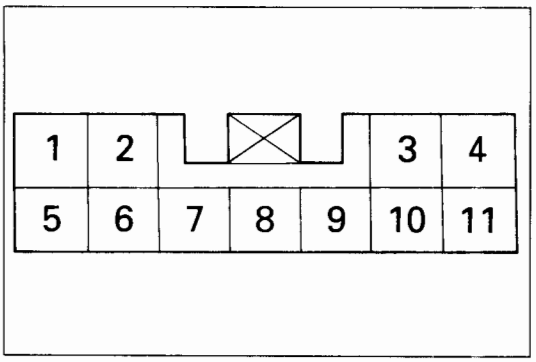

2. OFF-CAR INSPECTION

Operate the switch to check the continuity between the terminals.

Switch position \ Terminal		OPEN	CLOSE
Hardtop Switch	3	○	
	4	○	○
	11		○
Hard tonneau switch	4	○	○
	9		○
	10	○	
Switch Illumination (incandescent bulbs)	1	○	
	5	○	

NOTE
○—○ indicates that there is continuity between the terminals.

INSPECTION OF SWITCH LEDs

The switch LEDs must be tested using the **Pinpoint Tests** in **Diagnostics and Testing** in this section.

CHIME MODULE AND TURN-SIGNAL AND HAZARD FLASHER UNIT (SPYDER-UNIQUE RELOCATION)

REMOVAL AND INSTALLATION

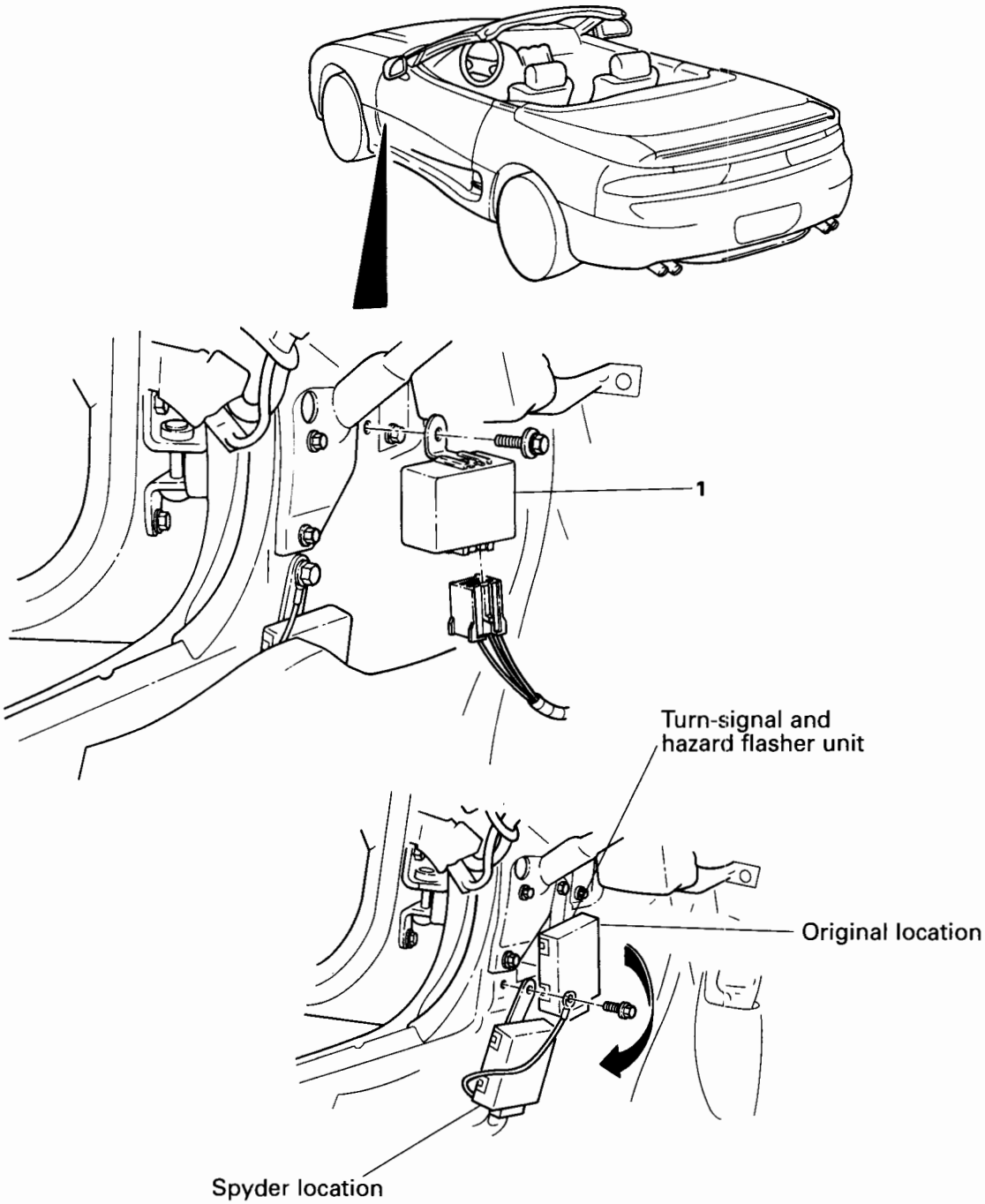

Removal step

1. Chime module

OBJECT-IN-TRUNK SENSOR

REMOVAL AND INSTALLATION

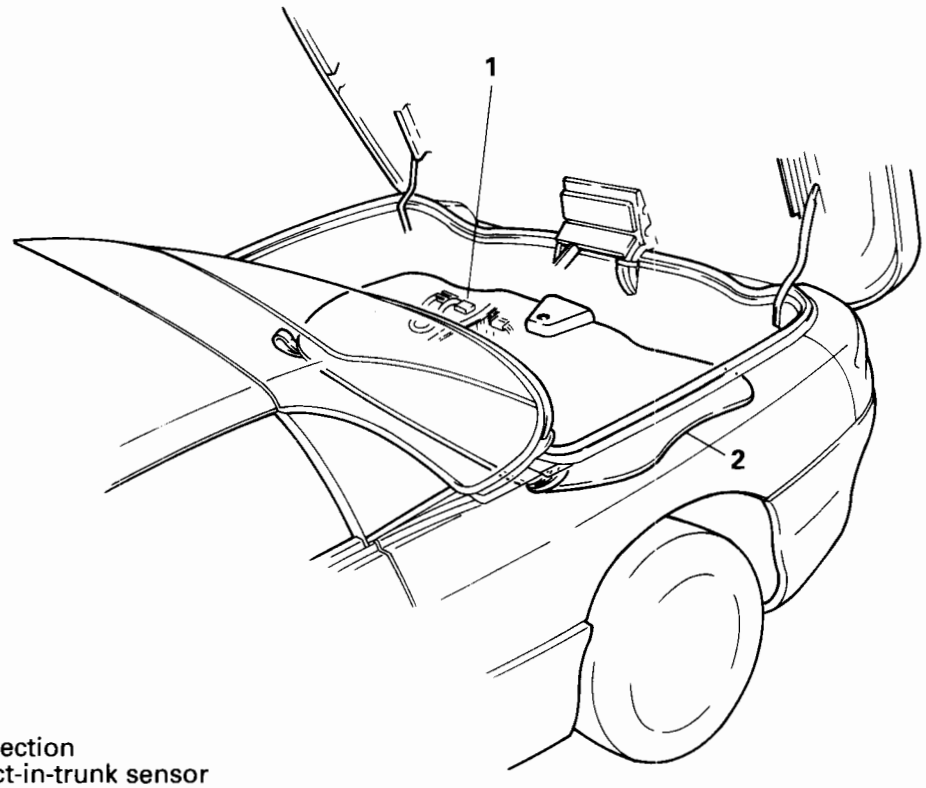

Removal steps

1. Connection
2. Object-in-trunk sensor

INSPECTION

INSPECTION OF OBJECT-IN-TRUNK SENSOR

NOTE

(1) Check under the object-in-trunk sensor for items that could be causing the backing board to bow (this will activate the sensor). Look for items in and around the tool trays that may be higher than the tray; items on top of the original equipment spare tire; or the spare tire itself that it is properly placed in the tire well. If these are noted, remove or rearrange them.

(2) Check the sensor's harness connector pins that they are not bent or damaged, then reconnect it.

- Try operating the hardtop system again. If the hardtop system still fails to operate, refer to the VISUAL INSPECTION below.

1. VISUAL INSPECTION
   Inspect for physical damage to the carpet covering, sensor substrate, and the backing board.

   Standard value: No visible evidence of damage

   - Replace the sensor if it is damaged.
   - If there is no apparent physical damage, go to Step 2.

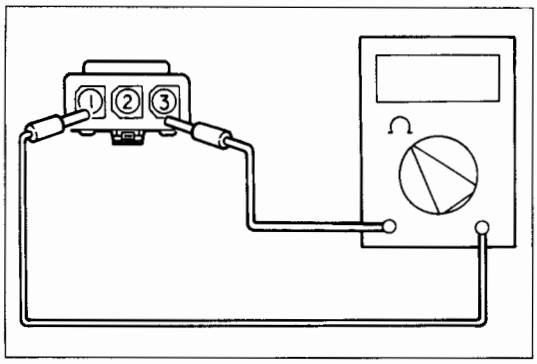

2. ELECTRICAL TEST
   (1) Place the object-in-trunk sensor face up on a clean, flat work surface.

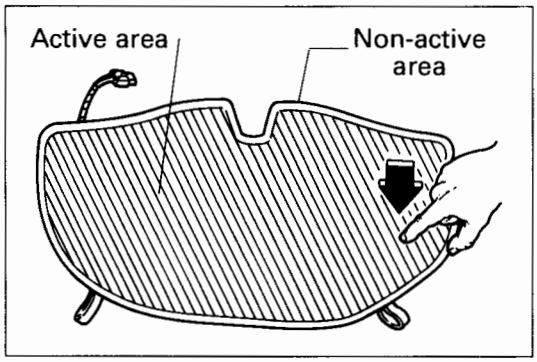

   (2) Check the object-in-trunk sensor for continuity while pressing and not pressing on the ACTIVE AREA with your finger (not your hand) as shown in the illustration.

Standard value:

Measured terminal	Continuity	
	No pressure (open)	Pressure (closed)
Between terminals 1 and 2	[0 - 3 Ω: 20°C (68° F)]	[0 - 3 Ω: 20°C (68° F)]
Between terminals 1 and 3	No continuity	[10 - 50 Ω: 20°C (68° F)]
Between terminals 2 and 3	No continuity	[10 - 50 Ω: 20°C (68° F)]

   (3) If the continuity is outside the standard value, replace the object-in-trunk sensor.

HARDTOP ELECTRONIC CONTROL UNIT (ECU)

REMOVAL AND INSTALLATION

Pre-removal and Post-installation Operation
- Removal and Installation of Front Trunk Trim and Hydraulic Line Cover (Refer to GROUP 52-Trims, in this Manual.)

CAUTION:
Replacement of this component requires the new ECU be run through Auto-configuration (Refer to Diagnostics and Testing, in this section).

NOTE:
The ECU must be grounded properly. Otherwise, electrical noise may be caused on the analog inputs.

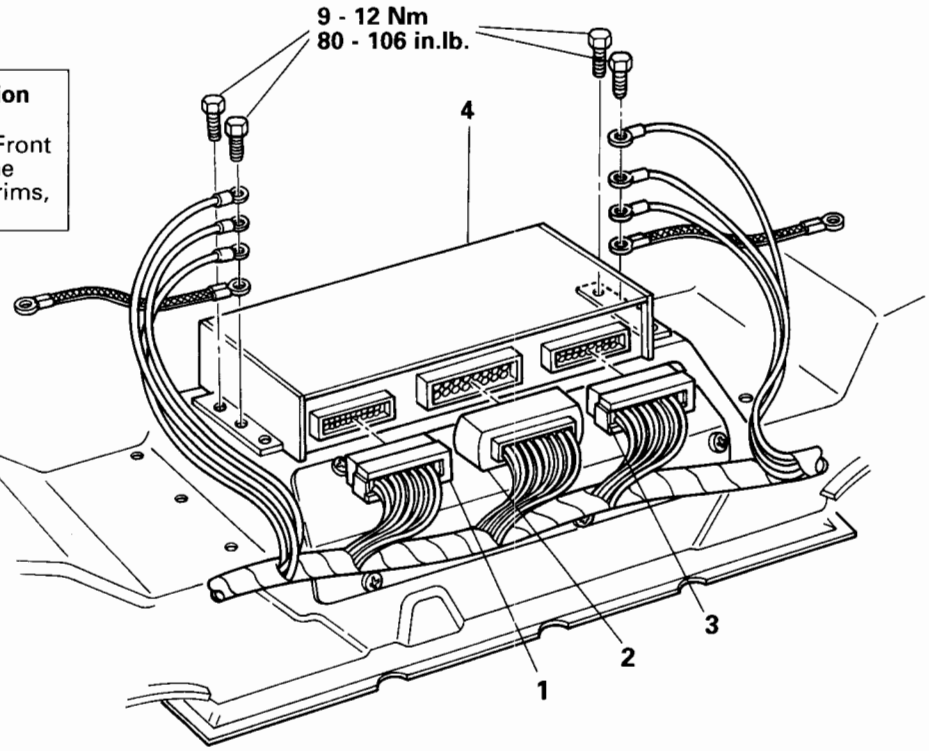

Removal steps of ECU (Electronic control unit)

1. Electrical connector
2. Electrical connector
3. Electrical connector
4. ECU

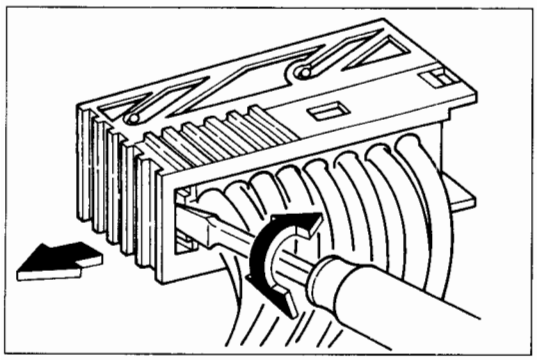

SERVICE POINTS OF REMOVAL

1. 2. 3. REMOVAL OF ECU ELECTRICAL CONNECTOR

(1) Insert the screwdriver into the slot, as shown in the illustration. Twist the screwdriver to disengage the slide on the connector.

(2) Move the slide to the left, and disengage the connector from the ECU.

SERVICE POINT OF INSTALLATION

3. 2. 1. INSTALLATION OF ECU ELECTRICAL CONNECTOR

Engage the electrical connector to the ECU, and move the slide to the right until it stops.

BODY DIMENSIONS AND MEASUREMENTS METHODS

REFER TO THE MITSUBISHI 3000GT BODY REPAIR MANUAL FOR INFORMATION ON:

- HOW BODY DIMENSIONS ARE INDICATED
- INDICATION OF REFERENCE DIMENSIONS
- MEASUREMENT POINTS

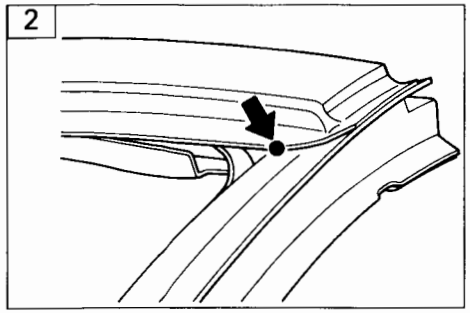

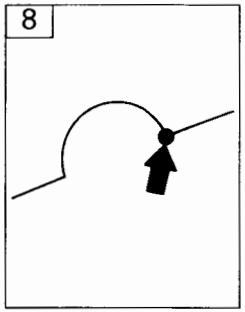

UPPER BODY

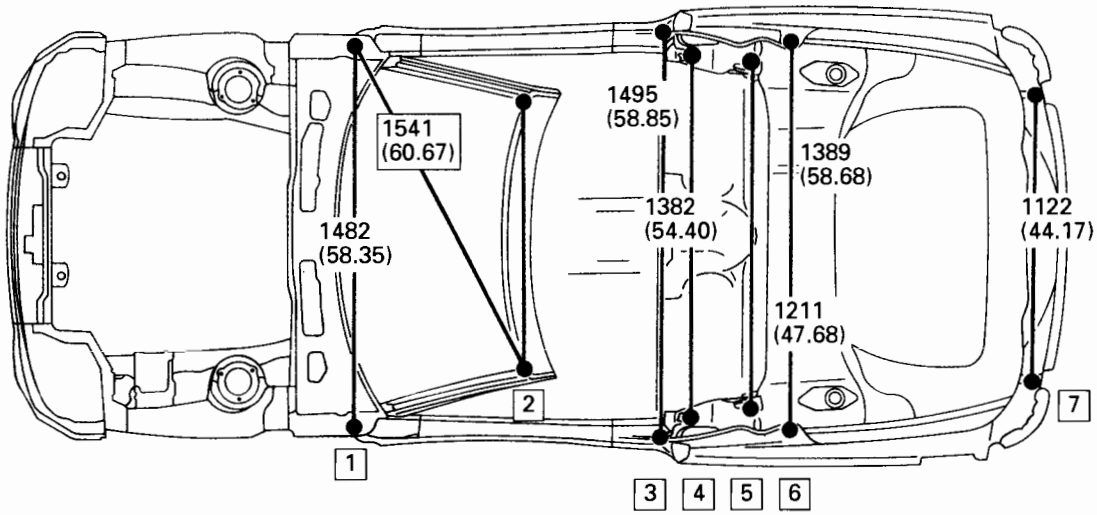

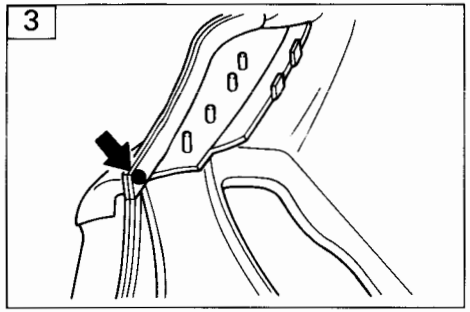

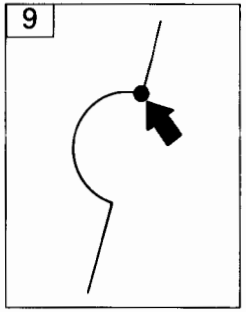

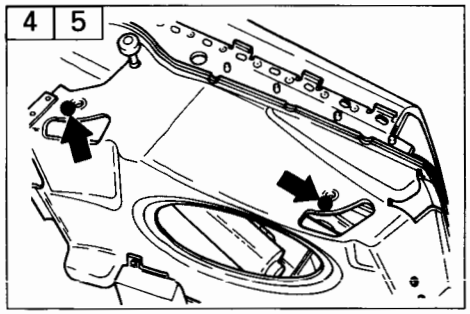

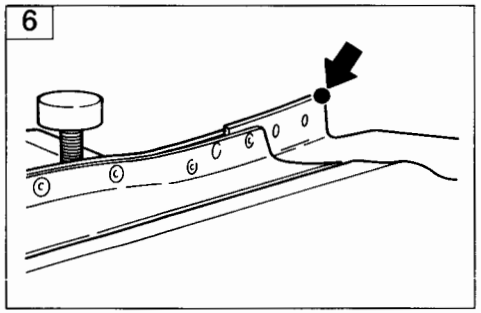

SIDE BODY

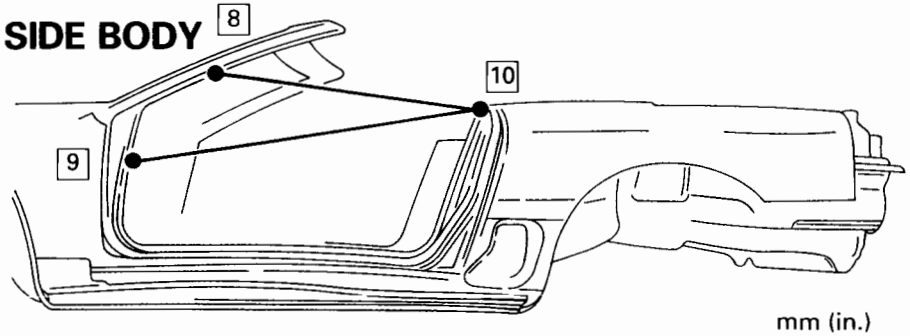

mm (in.)

No.	Measurement points	Diameters	No.	Measurement points	Diameters	No.	Measurement points	Diameters
1	Center of front fender mounting hole	6.6 mm (.26 in.)	5	Rear seat belt retractor D-ring attaching point	11.1 mm (.44 in.)	9	Notch on front pillar (lower)	--
2	Front pillar and roof connection	--	6	Rear pillar and quarter panel connection	--	10	Lock pillar reference point	--
3	Outside of quarter panel	--	7	Center of rear light mounting hole	□ 8.5mm (□ .33 in.)			
4	Front seat belt retractor D-Ring attaching point	11.1 mm (.44 in.)	8	Notch on front pillar (upper)	--			

BODY STRUCTURE

MITSUBISHI INSTALLED PARTS

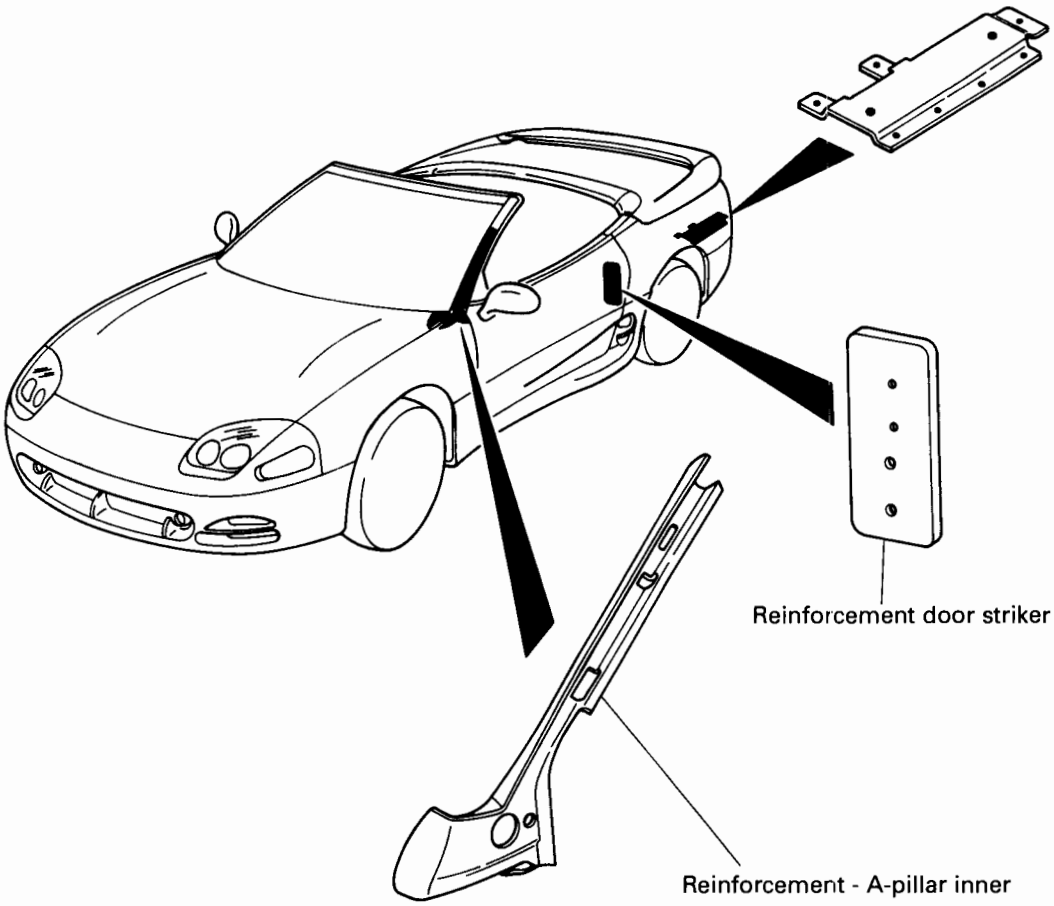

NOTE
Drivers and passenger doors are Spyder-unique due to strengthening components.
The new Spyder-unique door must be drilled to accept the Spyder-unique wire harness grommet. Use the procedure below.

1. Layout and mark the hole location as shown here.
2. Use a 32 mm hole saw to make the hole.
3. Clean up all drill shavings inside and outside the door.
4. Apply primer and let dry. Apply paint and let dry.
5. Install the door.

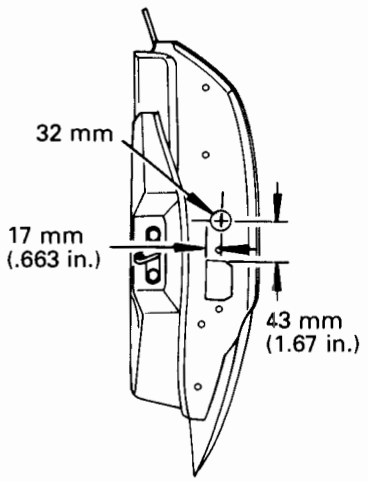

END VIEW

BODY STRUCTURE

ASC INCORPORATED INSTALLED PARTS

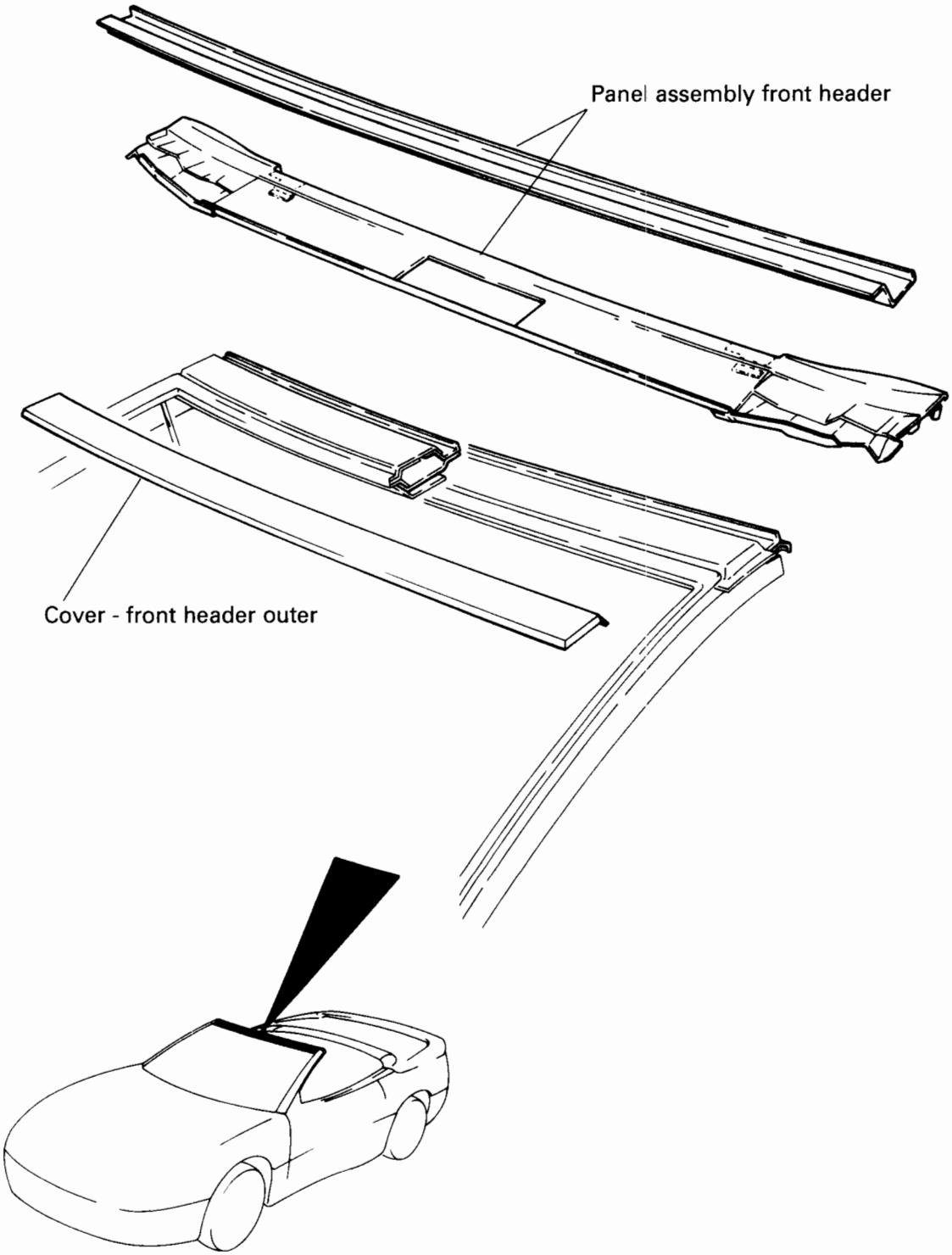

BODY STRUCTURE

ASC INCORPORATED INSTALLED PARTS

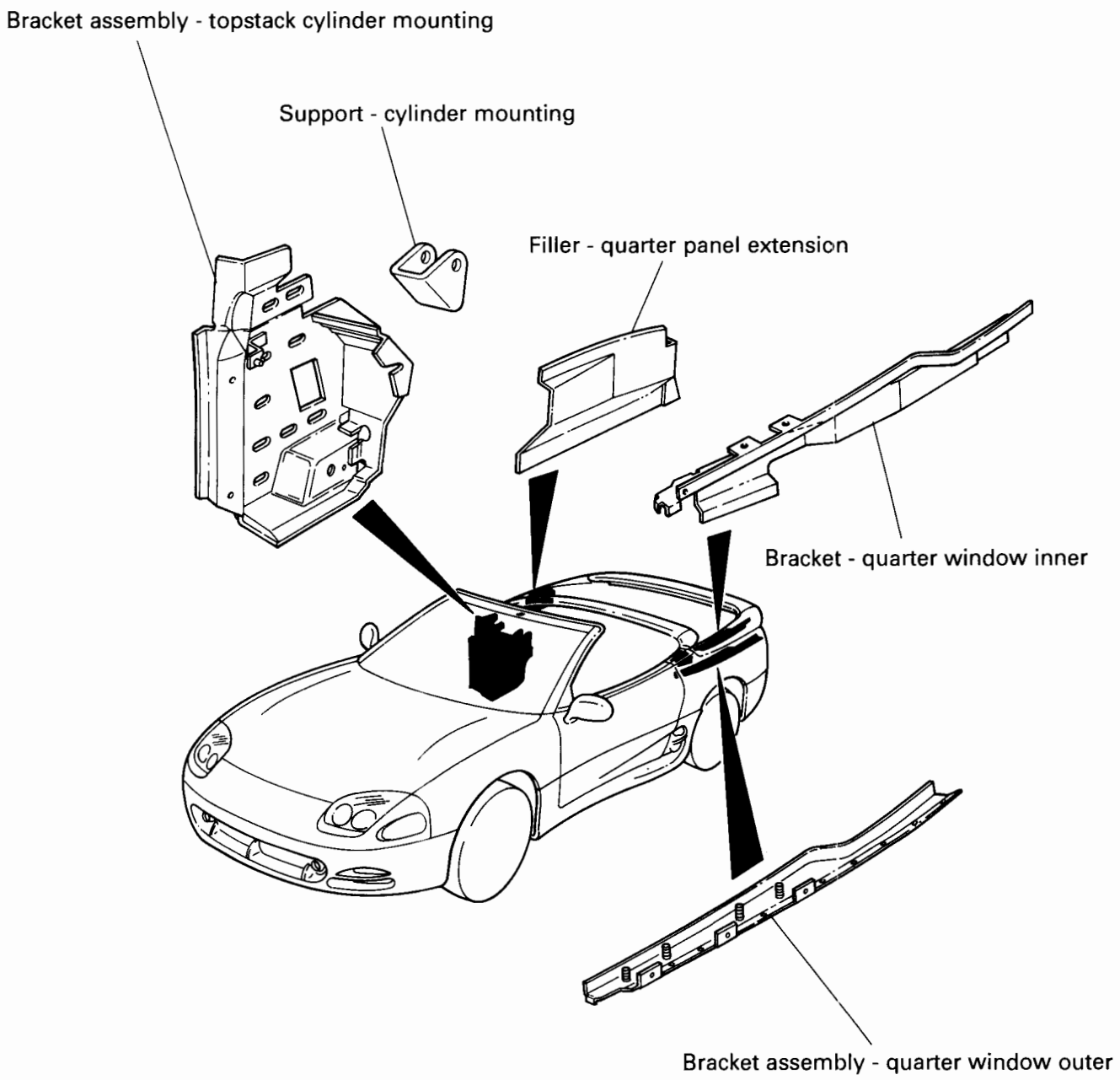

BODY STRUCTURE

ASC INCORPORATED INSTALLED PARTS

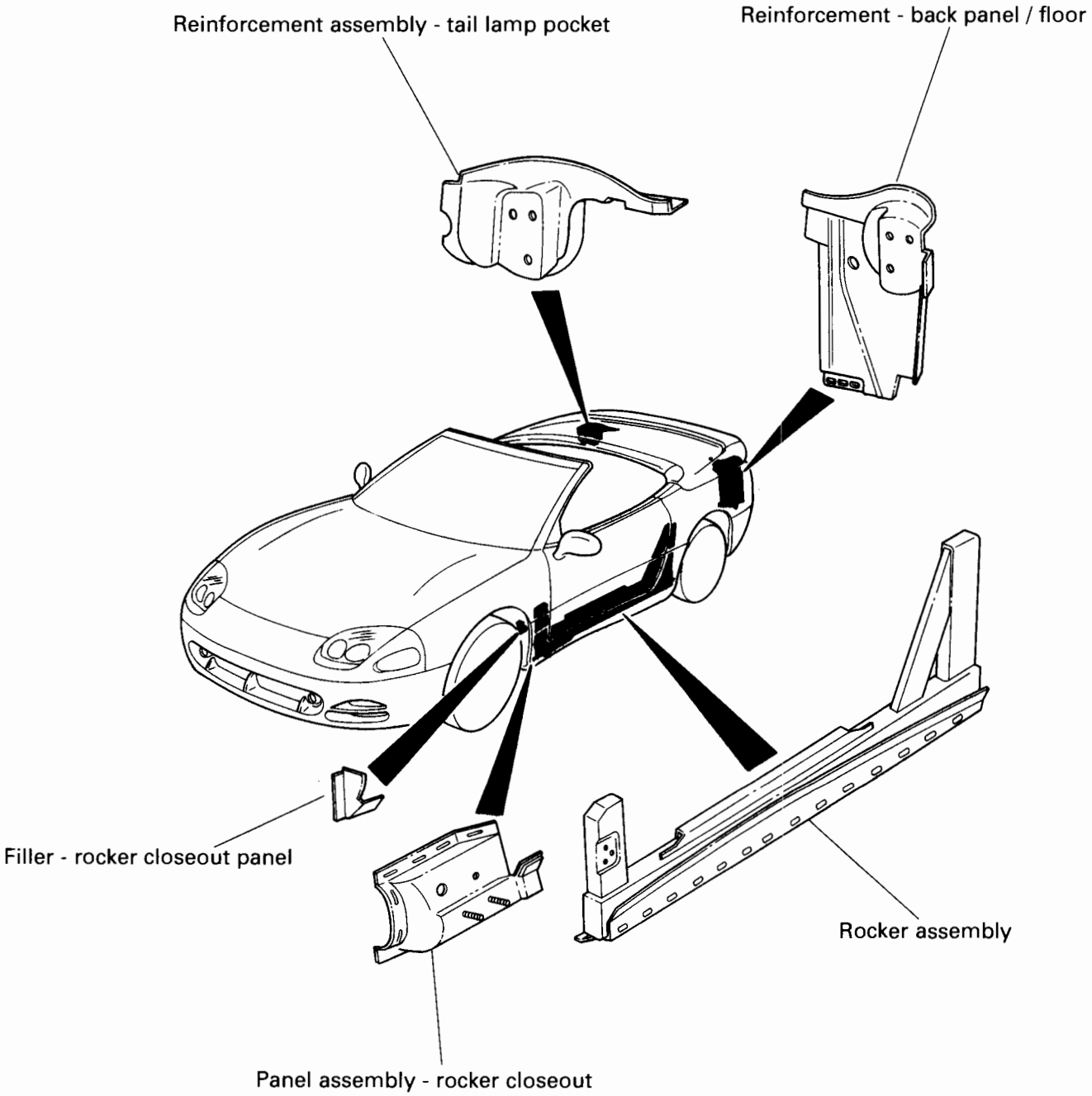

BODY STRUCTURE

ASC INCORPORATED INSTALLED PARTS

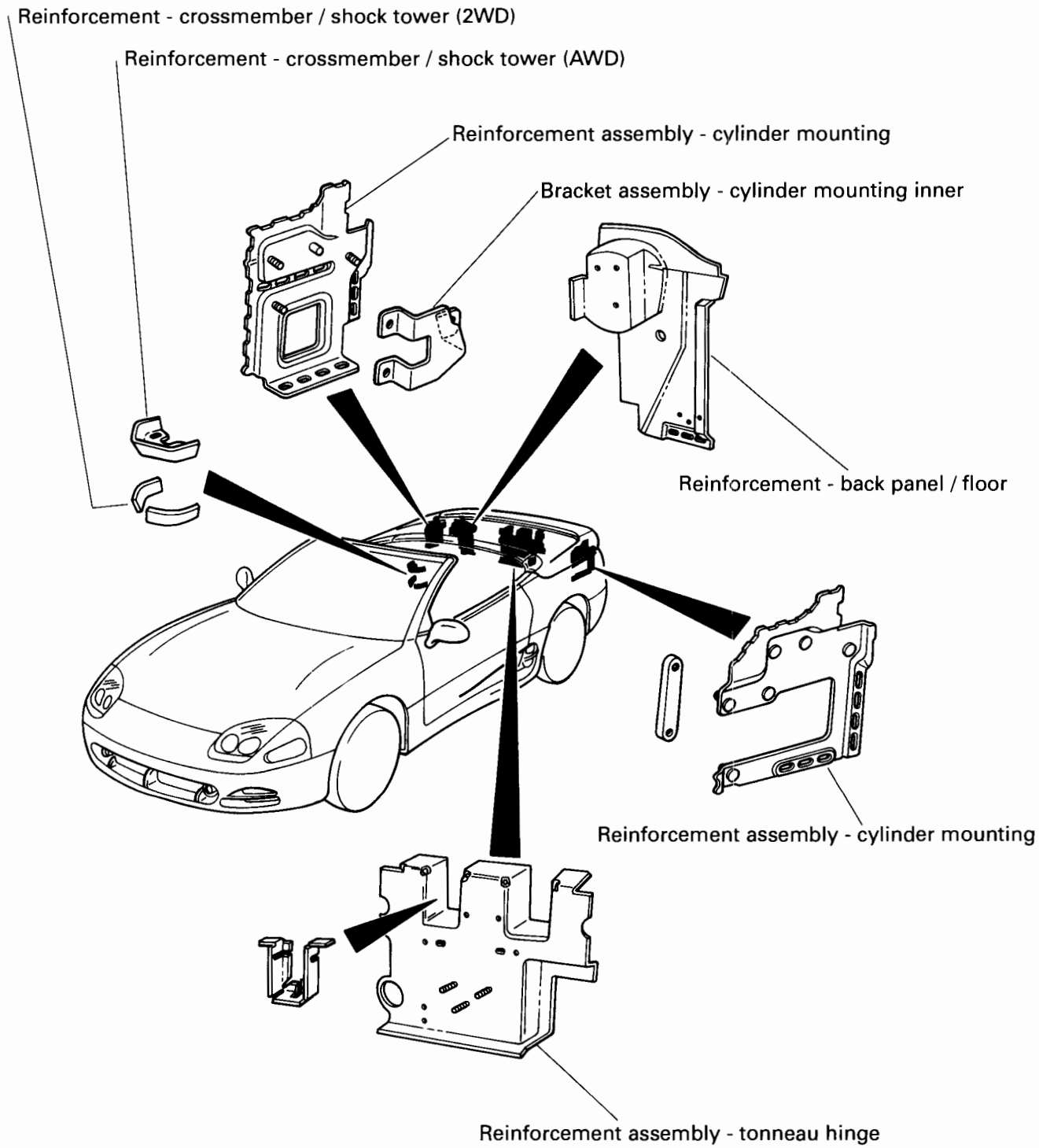

BODY STRUCTURE

ASC INCORPORATED INSTALLED PARTS

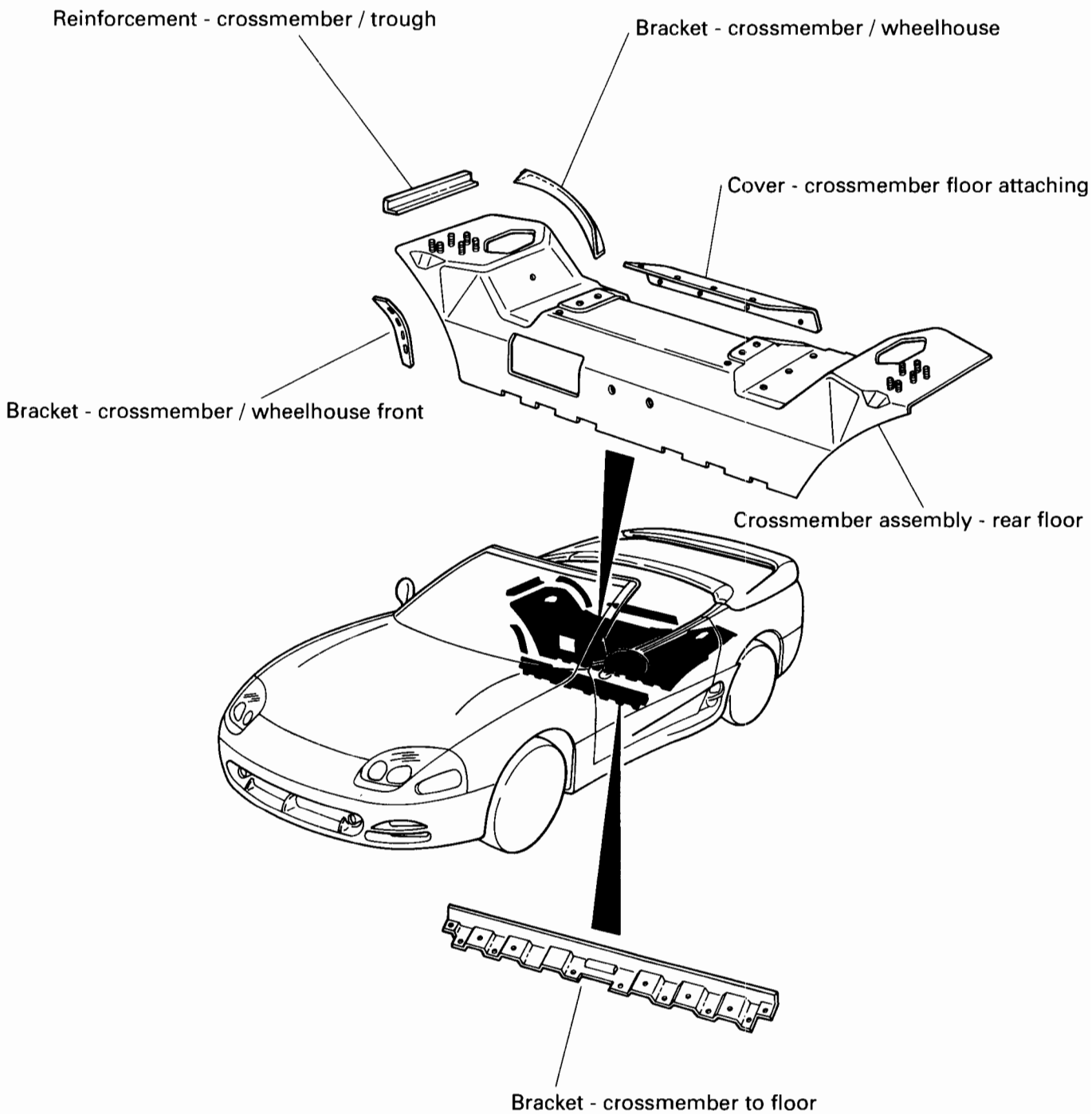

BODY STRUCTURE

ASC INCORPORATED INSTALLED PARTS

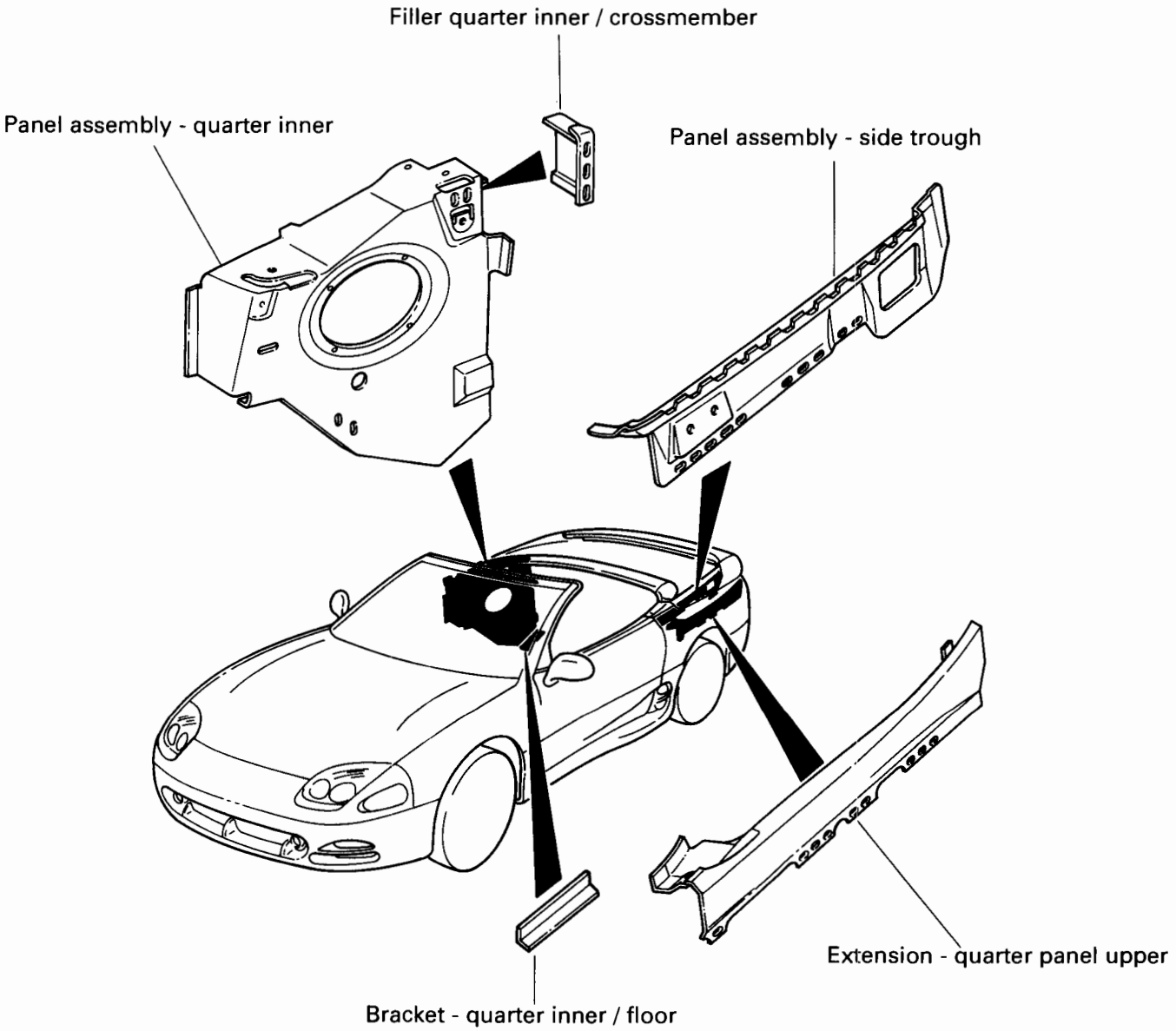

EXTERIOR

CONTENTS

AERO PARTS **2**
Side Air Dam 5
Tonneau Spoiler 2
MOULDINGS **9**
Drip Moulding 9
Quarter Belt Moulding 9
REAR BUMPER **11**
Rear Bumper Extension 11
REAR LOCK COVER **2, 5**
SPYDER DECAL **12, 13**

AERO PARTS AND REAR LOCK COVER

REMOVAL AND INSTALLATION

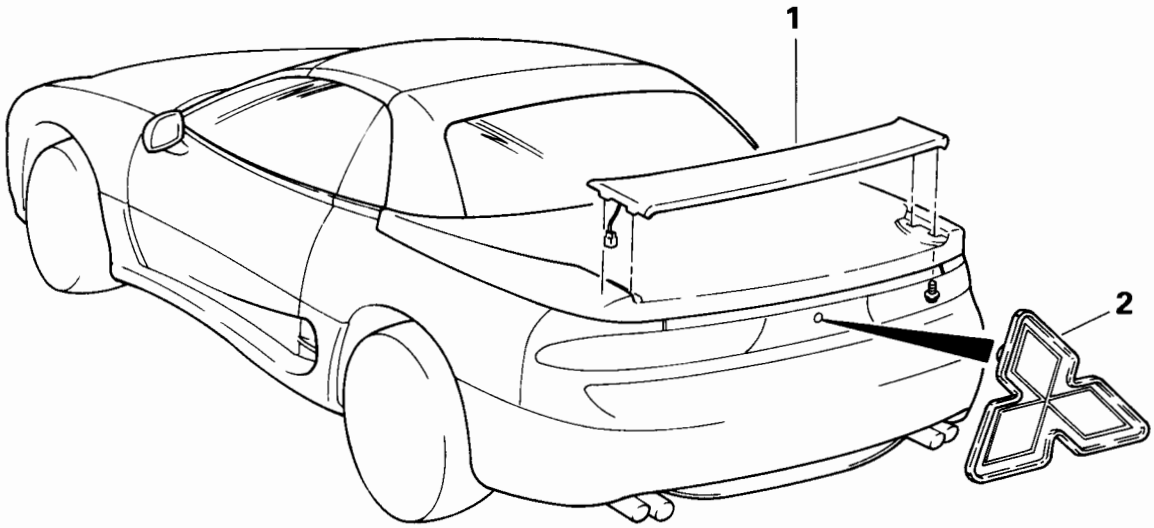

Rear spoiler removal steps

◆◆ ◆◆ 1. Rear spoiler

Rear lock cover removal steps

◆◆ ◆◆ 2. Emblem

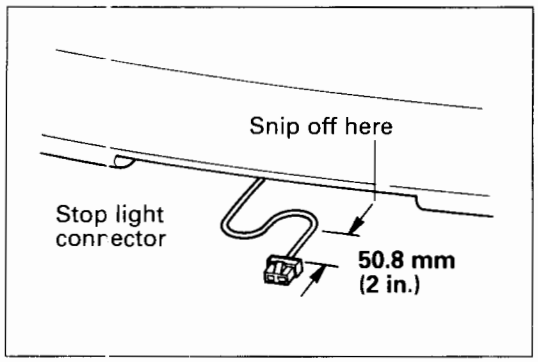

SERVICE POINT OF REMOVAL

1. REMOVAL OF REAR SPOILER

(1) Remove high mounted stop light (refer to 54-25, in this Manual.)
(2) Snip off the stop light harness connector at the spoiler as shown in the illustration.

NOTE
Retain the connector with the cut off wires for reinstallation.

(3) Open the hard tonneau. Pull the stop light wire harness grommet out from the tonneau and pull out the remaining wire.
(4) Remove the bolts attaching the spoiler, and separate the spoiler from the vehicle.

SERVICE POINT OF INSTALLATION

1. INSTALLATION OF REAR SPOILER

(1) Using adhesive tape, attach a 1.52 m (5 ft.) length of 16 ga. bell wire, or similarly stiff wire to the gathered ends of the stop light wire harness.

NOTE
This wire will be used to fish the stop light harness wire back through the spoiler.

(2) Route the fish wire back up through the tonneau and close the tonneau.
(3) Place a protective cover on the hard tonneau large enough to lay the spoiler face down on it.

NOTE
Be sure the tonneau and the spoiler are clean to prevent scratches.

(4) Place the spoiler face down on the protective cover.
(5) Fish the wire harness back through the spoiler.
(6) Install the spoiler to the tonneau.
(7) Open the tonneau making sure the spoiler will stay in place.
(8) Install the attaching bolts.

Standard value: 6 - 8 Nm (53 - 71 in. lb.)

(9) Remove the fish wire.
(10) Reattach the stop light connector to the harness in the spoiler using the **RECOMMENDED WIRE REPAIR** procedure (refer to **GROUP 42, Diagnostics and Testing**, in this Manual.)

NOTE
The harness wires must be installed to their respective wire colors. Otherwise, the stop light will not operate.

(11) Install the stop light.
(12) Test the stop light operation by applying the service brakes.

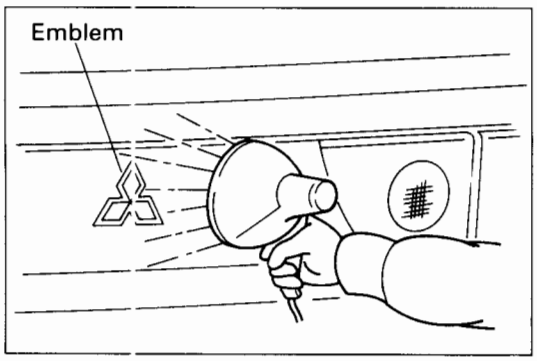

SERVICE POINT OF REMOVAL

2. REMOVAL OF EMBLEM

(1) Use an infrared lamp, or equivalent, to warm the emblem. This will soften the pressure sensitive double-sided tape behind it. Use a plastic moulding tool to pry off the emblem while the tape is warm and pliable. Discard the removed emblem.

CAUTION
Do not overheat the emblem as it could damage the rear panel garnish.

(2) Use a plastic moulding tool to carefully scrape off any remaining tape.
(3) Wipe the application surface of the rear garnish panel with a clean cloth dampened with degreaser (3M ATD Part No. 8906, or equivalent).

NOTE
After wiping the surface, allow the degreaser to evaporate for 3 minutes.

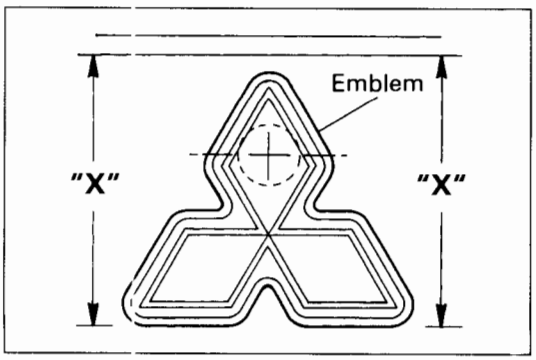

SERVICE POINT OF INSTALLATION

2. INSTALLATION OF EMBLEM

(1) Place a new emblem into the garnish hole.
(2) Align the emblem so that it is parallel to the top edge of the rear garnish.

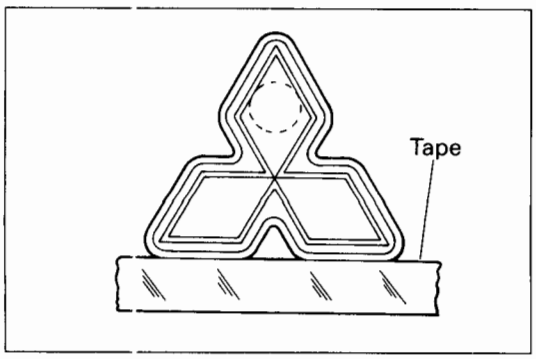

(3) Using a grease pencil or piece of adhesive tape, accurately mark the bottom of the emblem on the garnish.
(4) Remove the emblem from the garnish hole and peel off its paper backing.
(5) Reinstall the emblem and align it to the mark or tape. Press firmly.
(6) Remove the marks or tape.

AERO PART

REMOVAL AND INSTALLATION

Pre-removal and Post-installation Operation
- Removal and Installation of Front Splash Shield (Refer to GROUP 42 - Fender, in this Manual.)
- Removal and Installation of Lock Pillar Louvred Vent

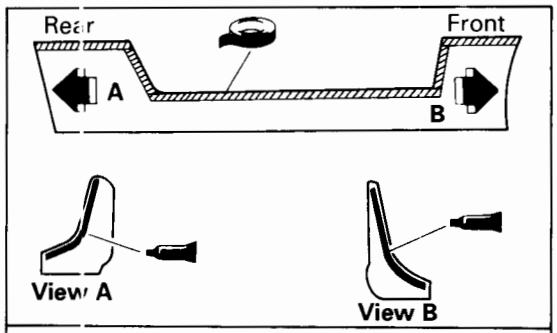

Adhesive tape:
3M ATD part No. 6382, or equivalent
Adhesive:
3M ATD Part No. 8609 SUPER FAST URETHANE, or equivalent

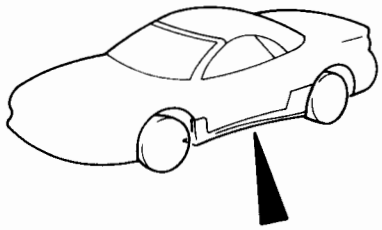

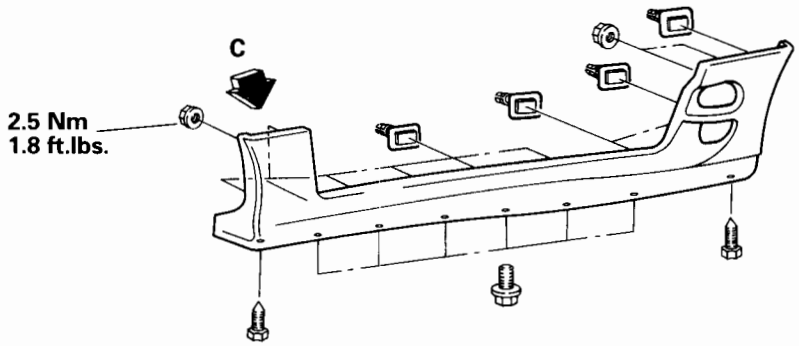

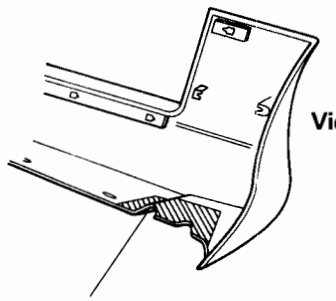

This portion has been removed to accommodate the Spyder-unique body structure

Side air dam removal

◆◆ ◆◆ 1. Side air dam

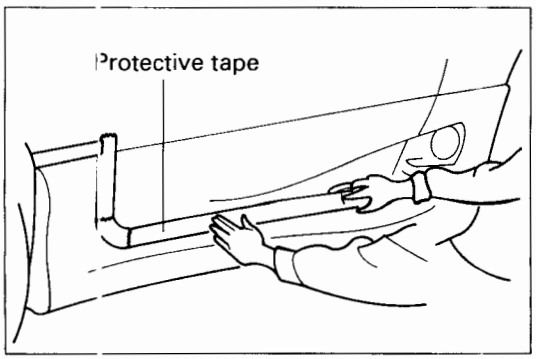

SERVICE POINT OF REMOVAL

1. REMOVAL OF SIDE AIR DAM

(1) Remove the side air dam mounting nuts.
(2) Affix protective tape to the periphery of the side air dam.

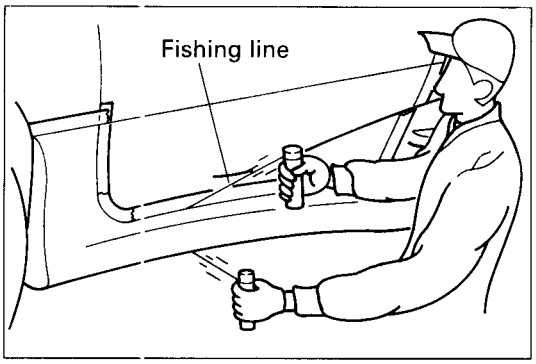

(3) Insert a fishing line [0.8 mm (.03 in.)] between the body and the side air dam, and grip each end of the fishing line. Cut through the adhesive material by pulling the fishing line in a sawing motion and remove the side air dam.
(4) When the side air dam is fastened with a clip or bolt, pull the side air dam toward you to remove the clip or bolt.

Caution
1. **To reuse the side air dam, remove it by pulling the fishing line along the body so as not to damage the side edges of the side air dam.**
2. **If it is hard to cut through the adhesive material, heat it to approximately 40°C (104°F).**

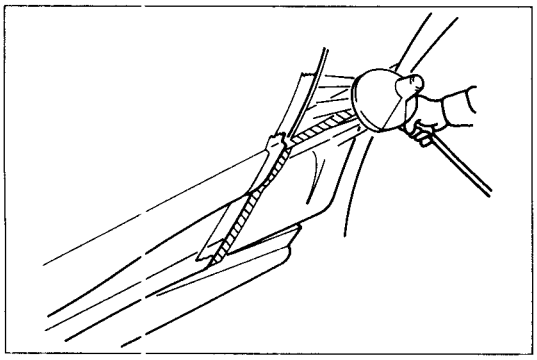

(5) Use an infrared lamp, or equivalent, to heat the pressure sensitive double-sided tape remaining on the body to 40 to 60°C (104 to 140°F) for 5 to 15 minutes.

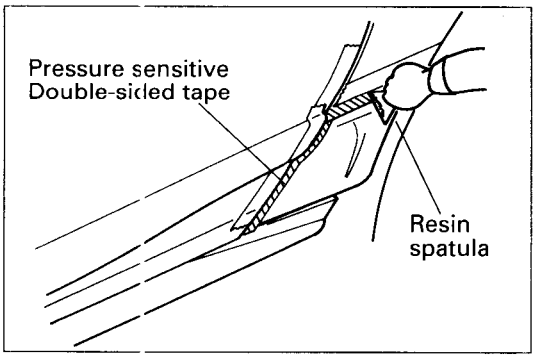

(6) Use a resin spatula to scrape off the pressure sensitive tape.

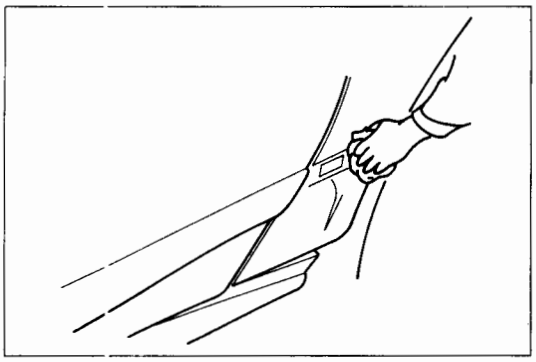

(7) Wipe the application surface of the body with a clean cloth dampened with degreaser (3M ATD Part No. 8906, or equivalent).

NOTE
After wiping the surface, allow the degreaser to evaporate for 3 minutes.

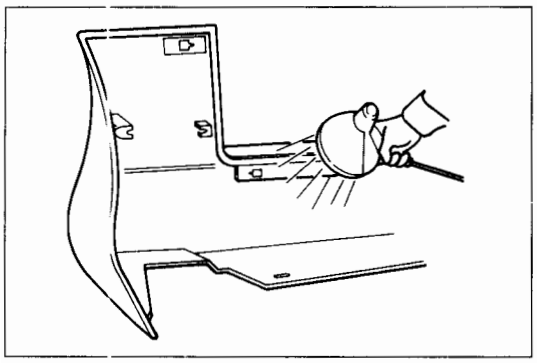

SERVICE POINT OF INSTALLATION

1. INSTALLATION OF SIDE AIR DAM

Adhesion of Pressure Sensitive Double-sided Tape to Side Garnish (For Reuse)

(1) Use an infrared lamp, or equivalent, to heat the pressure sensitive double-sided tape to 40 to 60°C (104 to 140°F) for 5 to 10 minutes.

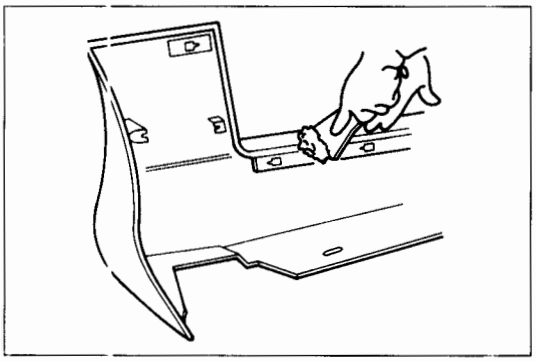

(2) Using a resin spatula or gasket scraper, scrape off the pressure sensitive double-sided tape.
(3) If the pressure sensitive double-sided tape remains on the side air dam, repeat Steps (1) and (2).

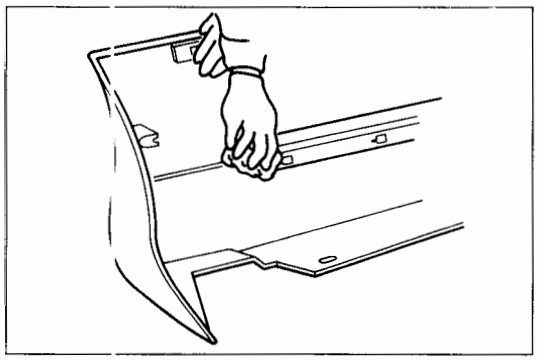

(4) Use a cloth dampened with degreaser (3M ATD Part No. 8906, or equivalent) to wipe the side air dam clean.
(5) Scrape the old adhesive slightly.

Caution
Do not scrape off all the old adhesive.

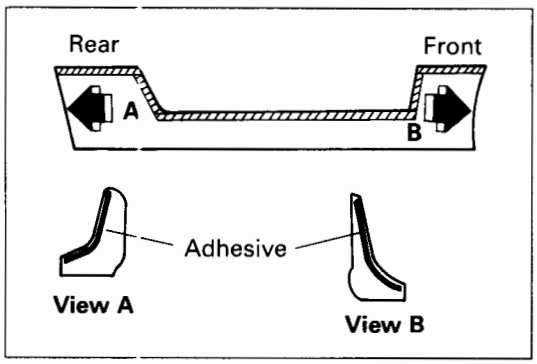

(6) Affix the pressure sensitive adhesive tape to the side air dam as shown in the illustration.

Adhesive tape: 3M ATD Part No. 6382, or equivalent

(7) Apply adhesive to the air dam as shown in the illustration.

Adhesive: 3M ATD Part No. 8609 SUPER FAST URETHANE, or equivalent

Installation of Side Garnish

(1) Remove the paper backing from the double-sided adhesive tape.
(2) With its clips and bolts aligned with the respective holes in the body, install the side air dam to the body.

NOTE
If it is difficult to affix the adhesive tape on the side air dam to the body, heat the application surface of the body and the adhesive surface of the side air dam before installing it.

Body . . . . . .40 to 60°C (104 to 140°F)
Side air dam . . . . . .20 to 30°C (68 to 86°)

(3) Apply pressure fully to the side air dam.

MOULDINGS

REMOVAL AND INSTALLATION

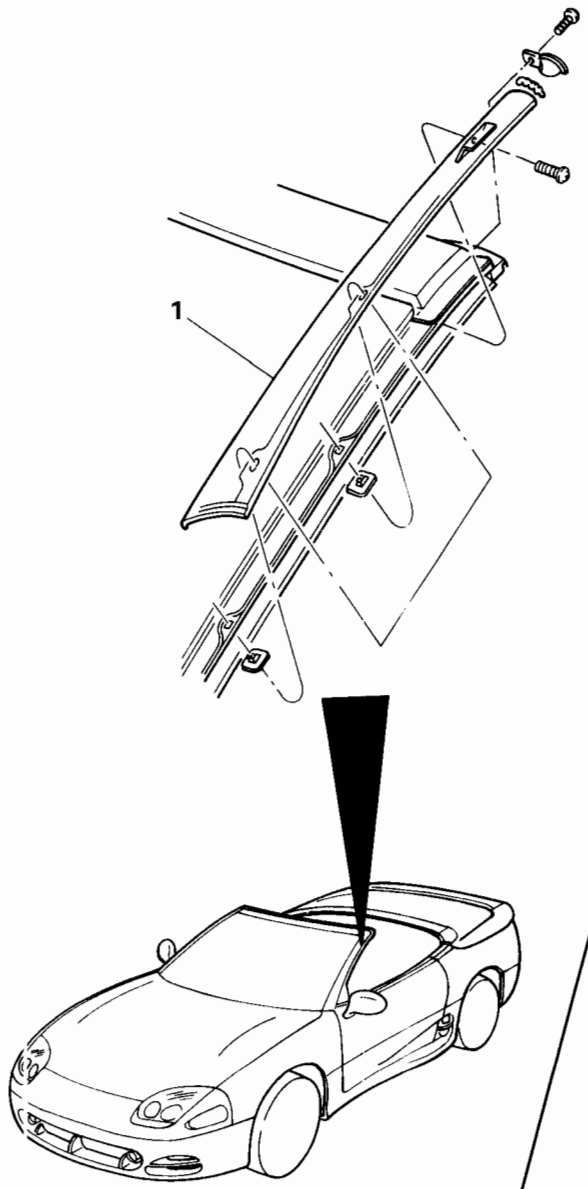

Pre-removal and Post-installation Operation
- Removal and Installation of Lower Portion of Windshield Header Weatherstrip from A-pillar Weatherstrip Holder (Refer to GROUP 42, in this Manual.)
- Removal and Installation of A-pillar Weatherstrip Holder (Refer to GROUP 42, in this Manual.)

Drip moulding removal step

1. Drip moulding

Pre-removal and Post-installation Operation
- Matchmark Quarter Window Guides to Body
- Removal and Installation of Quarter Window Guides (Refer to GROUP 42 - Quarter Window, in this Manual.)

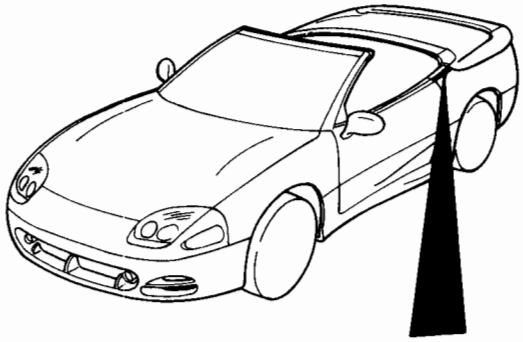

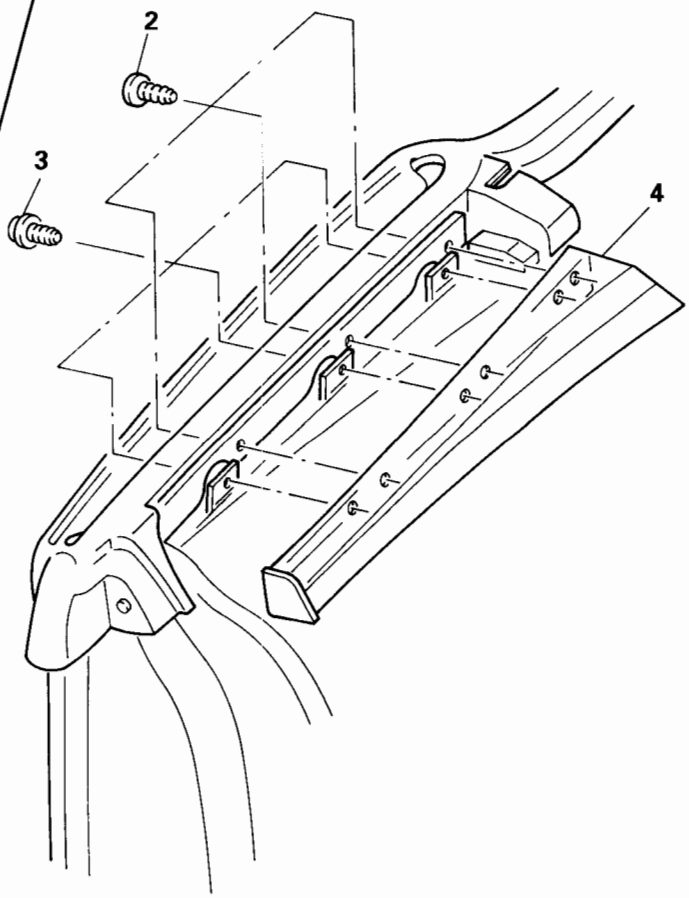

Quarter belt moulding removal steps

2. Retainer
3. Screw
4. Quarter belt moulding

SERVICE POINT OF REMOVAL

3. REMOVAL OF QUARTER BELT MOULDING SCREW

Remove the inboard portion of the weatherstrip from the vehicle, or use an angled screwdriver to remove the attaching screws.

SERVICE POINT OF INSTALLATION

3. INSTALLATION OF QUARTER BELT MOULDING SCREW

Install the attaching screws using an angled screwdriver, or if the weatherstrip was removed, reattach it.

REAR BUMPER UPPER EXTENSION

REMOVAL AND INSTALLATION

Pre-removal and Post-installation Operation
- Removal and Installation of Side and Rear Trunk Trim (Refer to GROUP 52, in this Manual.)
- Removal and Installation of Rear Combination Light (Refer to GROUP 54, Vol. 1 of the Service Manual.)

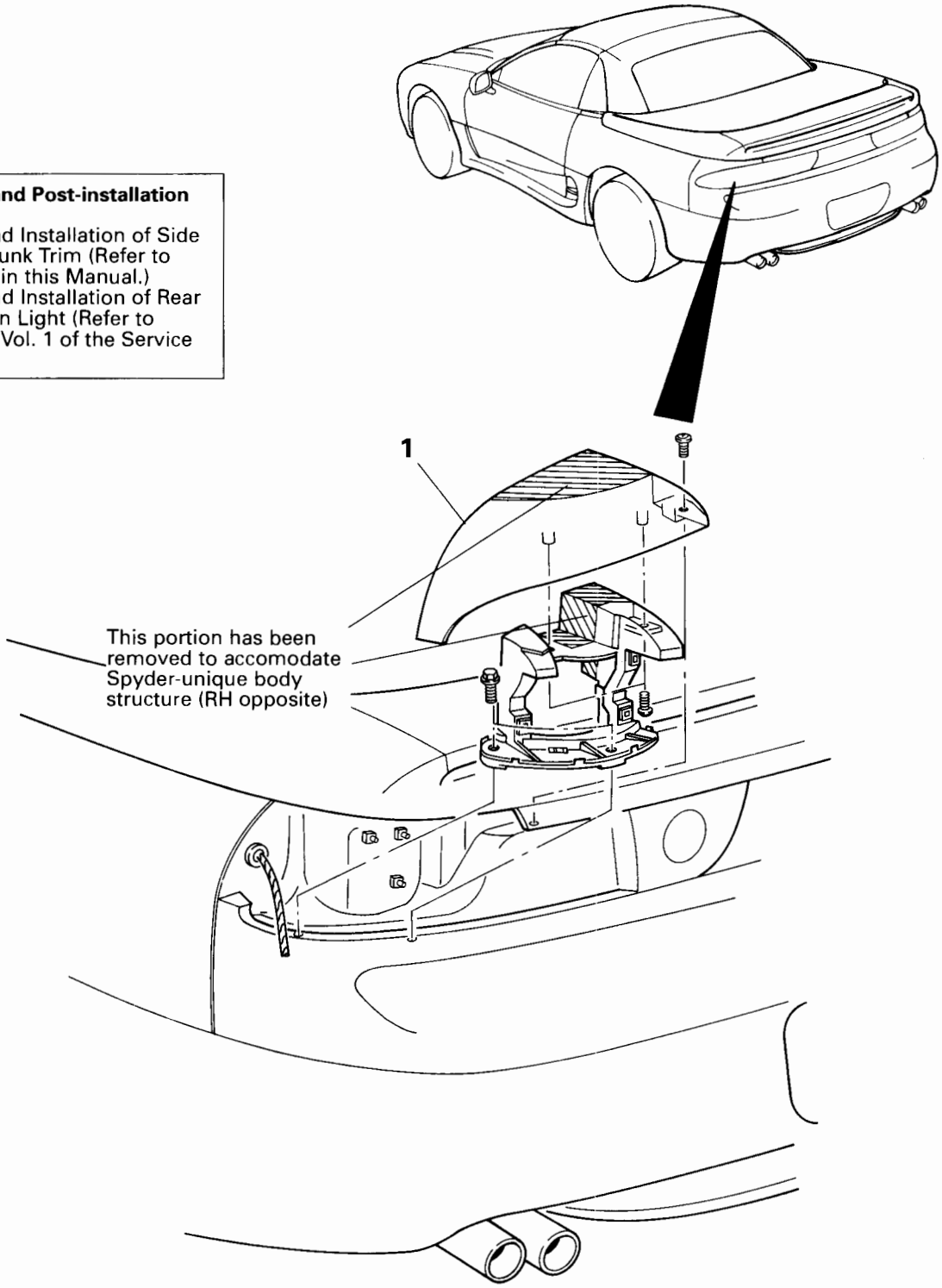

Rear bumper upper extension removal

1. Rear bumper upper extension

SPYDER-UNIQUE MITSUBISHI DECAL

PLACEMENT

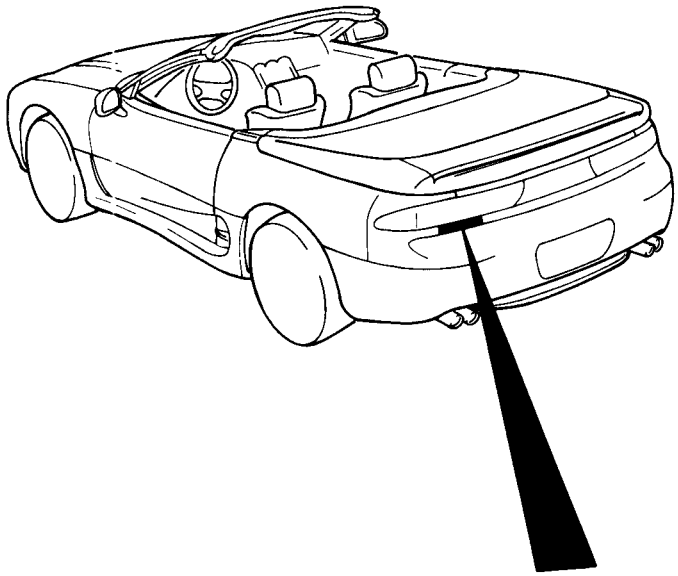

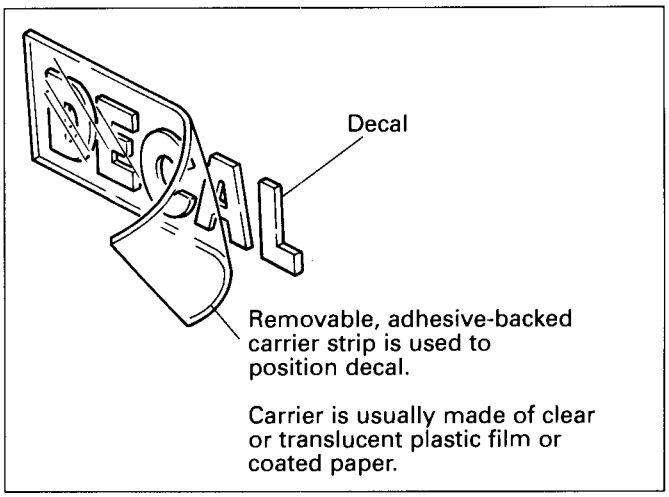

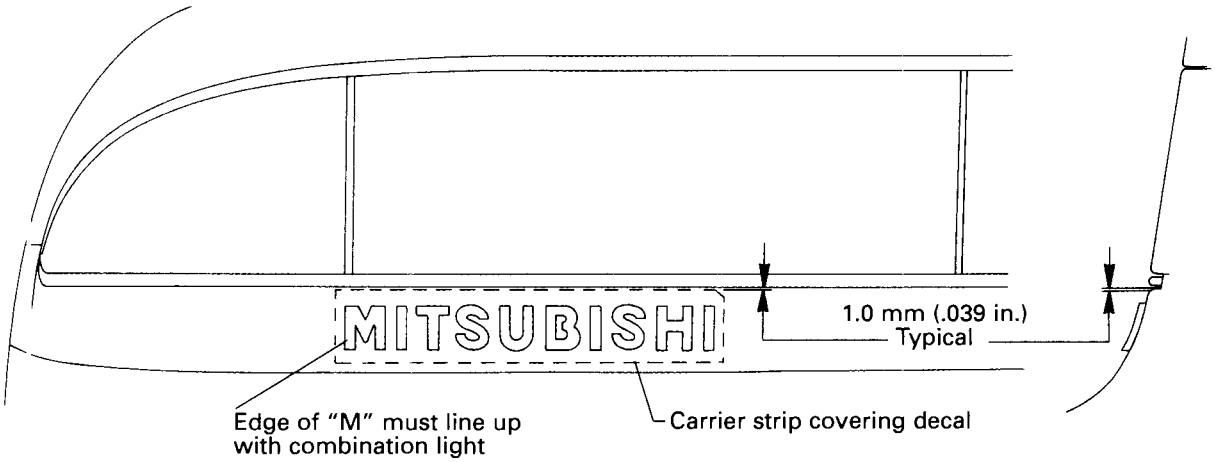

SPYDER VR4 AND SPYDER SL

SPYDER-UNIQUE DECALS

PLACEMENT

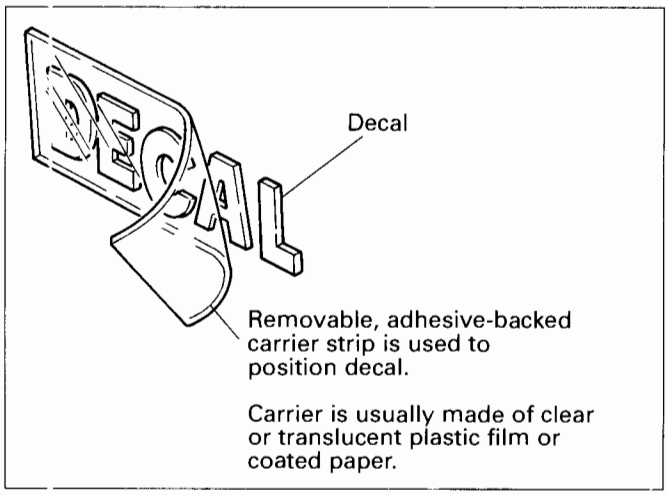

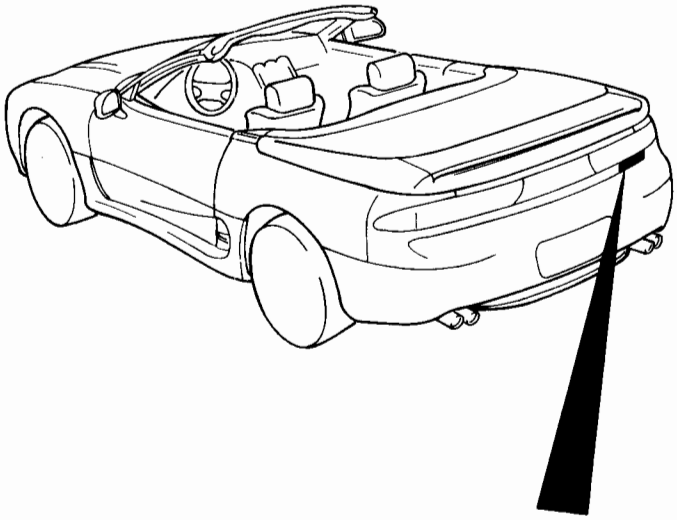

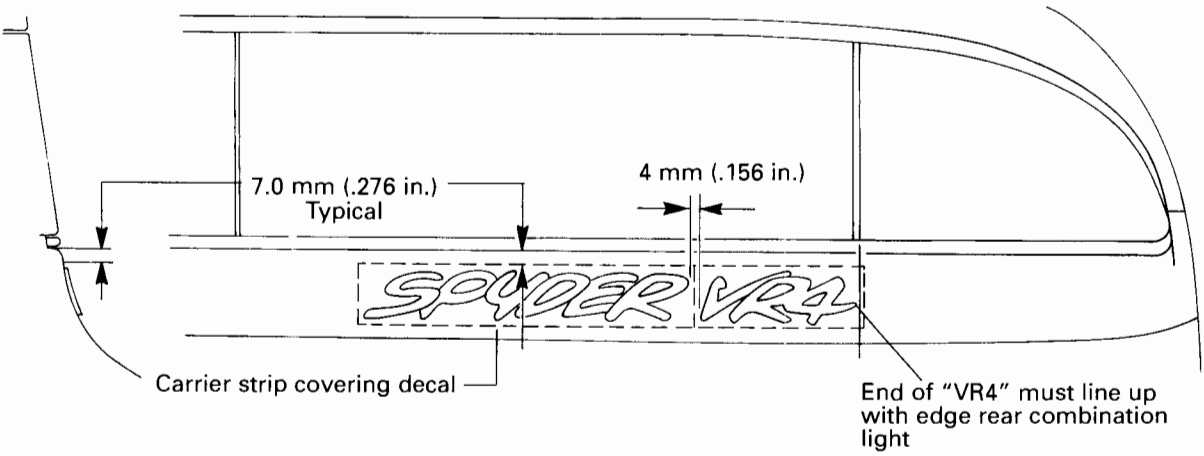

SPYDER VR4 ONLY

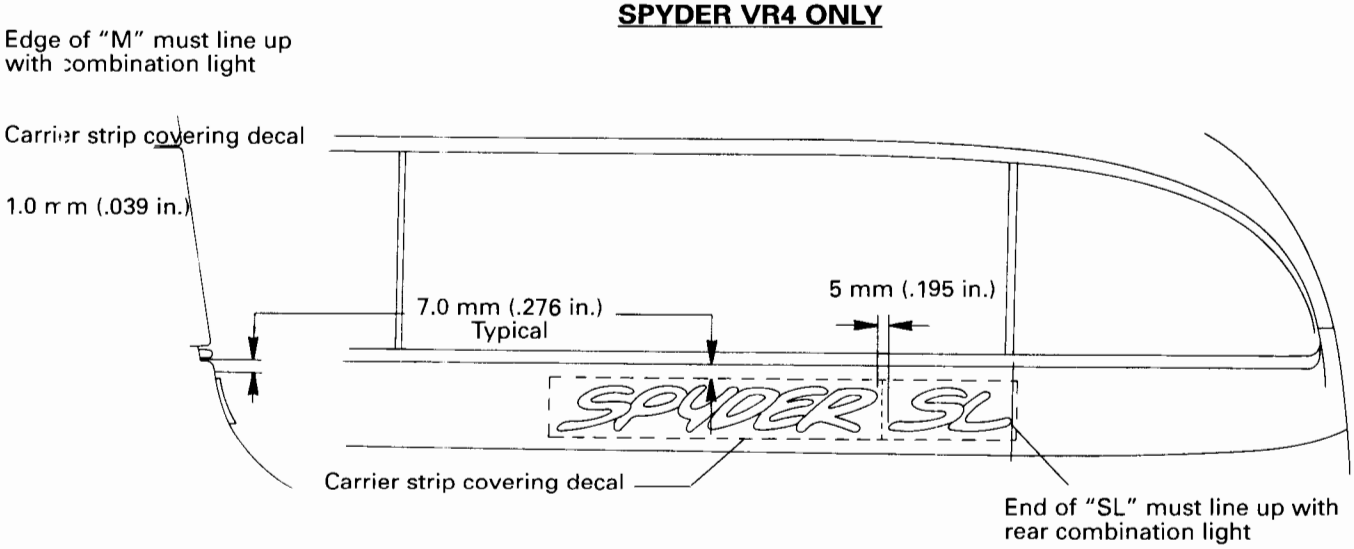

SPYDER SL ONLY

NOTES

INTERIOR

CONTENTS

CARGO/HARDTOP STOWAGE AREA TRIM .. 15
CENTER CLOSEOUT PANEL 24
DIAGNOSTIC AND TESTING 2
- Circuit Diagram (Self-dimming Mirror)..... 5
- Inspection and Verification 2
- Pinpoint Tests 4
- Symptom Chart 3
- Troubleshooting Hints 3

FRONT SEATS 18
- Recline-angle Stop 18

FRONT PILLAR TRIM 10
FRONT SEAT BELT GUIDE 20
HEADER GARNISH 10
HEADLINING 21
QUARTER TRIM PANEL 13
REAR SEAT, STRIKER AND REAR SHELF PANEL 22
SEAT BELT 27
SELF-DIMMING LIGHTED REARVIEW MIRROR 11
- Black-out Applique 11
- Mirror Garnish 11
- Mounting Button 11

SERVICE ADJUSTMENT PROCEDURES 7
- Center Closeout Panel 8
- Quarter Trim Panels 9
- Rear Seat Strikers 9
- Rear Shelf Panel 8

WARNINGS REGARDING SERVICING OF SUPPLEMENTAL RESTRAINT SYSTEM (SRS) EQUIPPED VEHICLES
WARNING!

(1) Improper service or maintenance of any component of the SRS, or any SRS-related component, can lead to personal injury or death to the service personnel (from inadvertent firing of the air bag) or to the driver (from rendering the SRS inoperative).
(2) Service or maintenance of any SRS component or SRS-related component must be performed only at an authorized MITSUBISHI dealer.
(3) MITSUBISHI dealer personnel must thoroughly review this manual, and especially its GROUP 52B - Supplemental Restraint System (SRS) and GROUP 00 - Maintenance Service, before beginning any service or maintenance of any component of the SRS or any SRS-related component.

NOTE
The SRS includes the following components: impact sensors, SRS diagnosis unit, SRS warning light, air bag module, clock spring and interconnecting wiring. Other SRS-related components (that may have to be removed/installed in connection with SRS service or maintenance) are indicated in the table of contents by an asterisk (*).

INSPECTION AND VERIFICATION

1. Verify the customer's original concern by operating the system to duplicate the concern.

2. Inspect to determine if any of the following mechanical or electrical concerns apply:

MECHANICAL	ELECTRICAL
• Damaged mirror. • Damaged bracket.	• Blown fuse. • Circuitry open or shorted. • Damaged control switch. • Damaged mirror. • Damaged backup lamp switch.

3. If the inspection reveals obvious concern(s) that can be readily identified, service as required.

4. If the concern(s) remain after inspection, determine the symptom and go to the Symptom Chart.

SYMPTOM CHART

NOTE: REFER TO TROUBLE SHOOTING HINT FOLLOWING THE SYMPTOM CHART

CONDITION	POSSIBLE CAUSE	ACTION
• Rear view mirror Auto-Dim inoperative.	• Circuitry open/shorted. • Damaged mirror. • Damaged backup lamp switch.	• Go to Pinpoint Test A.

TROUBLESHOOTING HINTS

Pinpoint Test A

Indicates that the self-dimming mirror will not dim properly. This may occur if circuits CR 5, CR 4, and/or CR 6 are open/shorted, mirror damaged, voltage on circuit CR 6 indicates that the vehicle is in Reverse which prohibits the mirror from dimming.

PINPOINT TESTS

TEST A
REARVIEW MIRROR AUTO-DIM INOPERATIVE

TEST STEP	RESULT ▶	ACTION TO TAKE
A-1 CHECK CIRCUIT CR 5 FOR SYSTEM VOLTAGE		
• Access and disconnect rearview mirror connector E-127. • Using Digital Volt/Ohm Meter (DVOM) set to DC volt, connect negative lead to a known good ground. • Connect the positive lead to pin 1 at rearview mirror connector E-127. • Turn ignition to ON position. • Read voltmeter. • **Is system voltage present?**	Yes ▶ No ▶	Go to **A-2**. Repair circuit CR 5. Restore vehicle. Retest system.
A-2 CHECK CIRCUIT CR 4 FOR OPEN		
• Connector E-127 at rearview mirror disconnected. • Using DVOM set to ohm scale, connect negative lead to known good ground. • Connect positive lead to pin 2 at rearview mirror connector E-127. • Read ohmmeter. • **Is there 3 ohms or less?**	Yes ▶ No ▶	Go to **A-3**. Repair circuit CR 4. Restore vehicle. Retest system.
A-3 CHECK CIRCUIT CR 6 FOR VOLTAGE		
• Connector E-127 at rearview mirror disconnected. • Using DVOM set to DC volt, connect negative lead to known good ground. • Connect the positive lead to pin 3 at rearview mirror connector E-127. • Turn ignition to ON position. • Make sure transaxle is in park (automatic) neutral (manual). • Read voltmeter. • **Is voltage present?**	Yes ▶ No ▶	Go to **A-4**. Replace rearview mirror. Restore vehicle. Retest system.
A-4 CHECK CIRCUIT CR 6 AT BACK UP LAMP SWITCH		
• Connector E-127 at rearview mirror disconnected. • Access and disconnect connector B-25 (manual transaxle) B-26 (automatic transaxle). • Using DVOM set on DC volt, connect negative lead to known good ground. • Connect the positive lead to pin 1 (manual transaxle) pin 11 (automatic transaxle) at backup lamp switch. • Turn ignition to ON position. • Read voltmeter. • **Is voltage present?**	Yes ▶ No ▶	Repair circuit CR 6. Restore vehicle. Retest system. Refer to Volume 1 of Service Manual (for backup lamp switch adjustment or repair).

SELF-DIMMING LIGHTED REARVIEW MIRROR CIRCUIT DIAGRAM

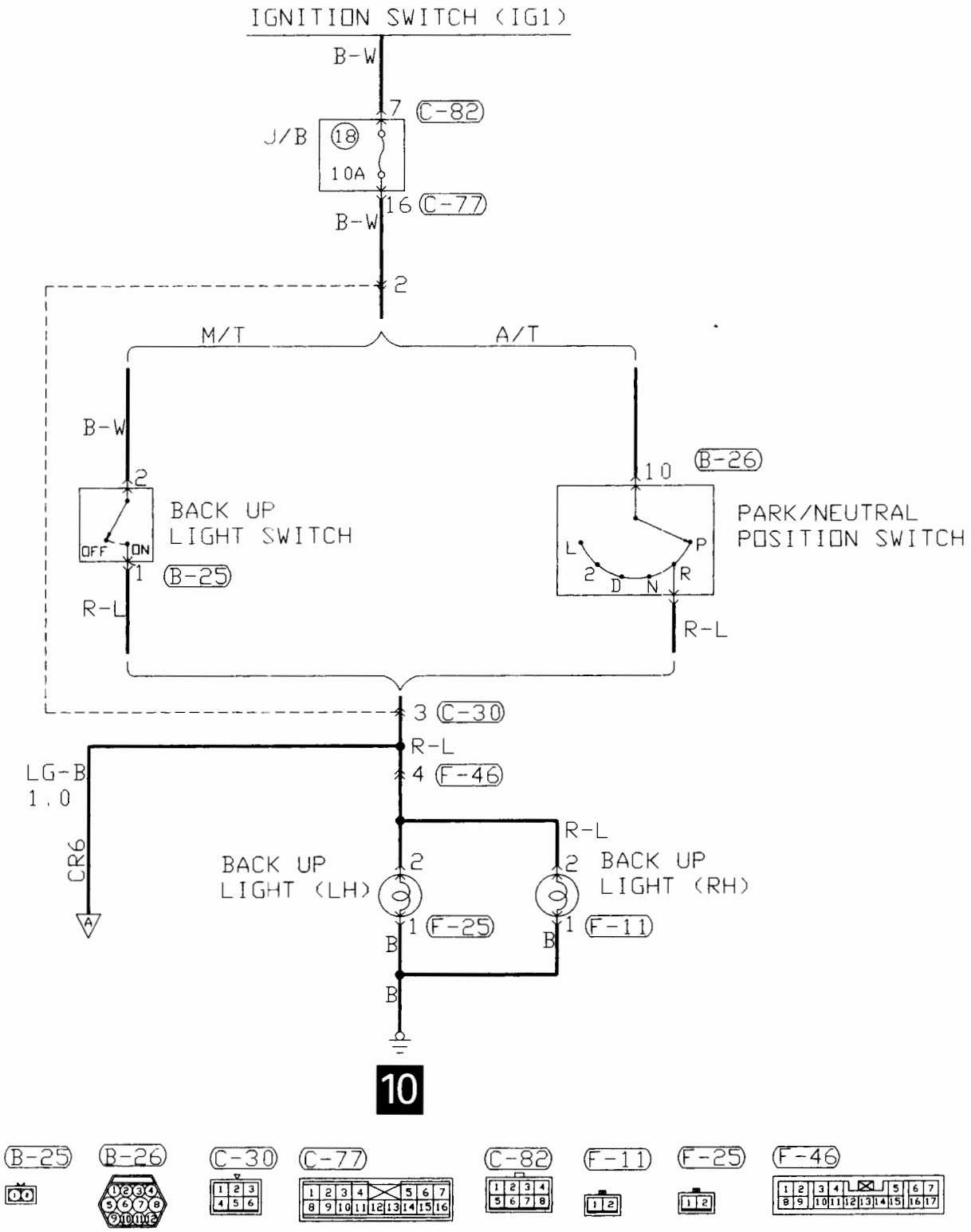

SELF-DIMMING LIGHTED REARVIEW MIRROR CIRCUIT DIAGRAM

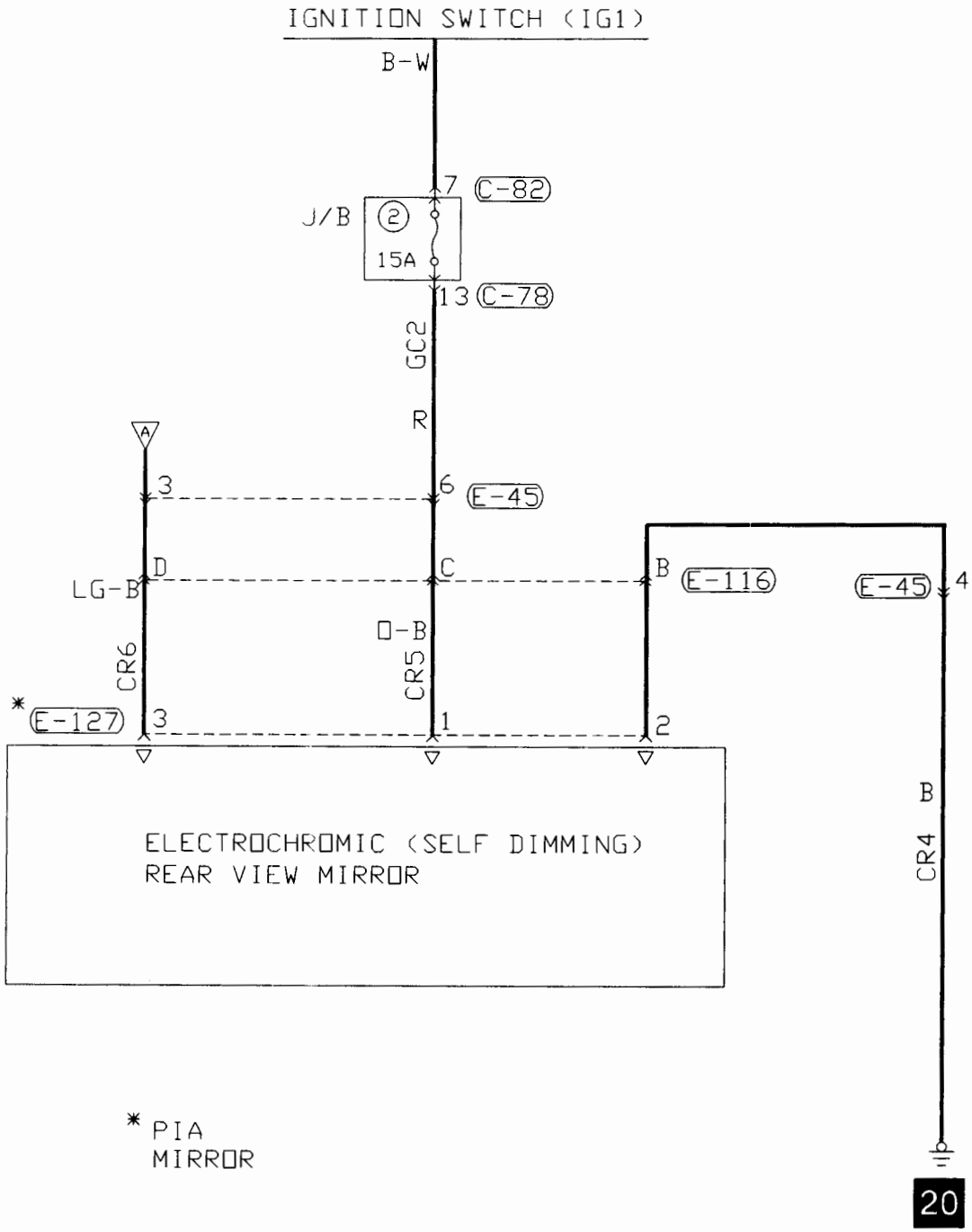

* PIA MIRROR

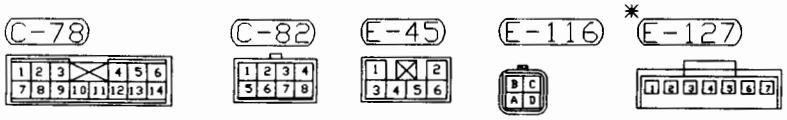

SERVICE ADJUSTMENT PROCEDURES

• REAR SHELF PANEL
• CENTER CLOSEOUT PANEL
• QUARTER TRIM PANELS (POSITION)
• FLIPPER DOORS (POSITION)

Description

The positions of the quarter trim panels in the vehicle are the foundation for all height, position or gap adjustments of the rear shelf panel, flipper doors, and center closeout panel. The only piece of trim that is not stationary is the center closeout panel. The center closeout rides on two cams and is mechanically actuated by linkage connected to the hardtop mechanism. As the hardtop opens the closeout panel moves backward to fill the gap at the front of the hard tonneau where the hardtop was. When the hardtop closes, the closeout panel moves forward.

All the subject parts, including the hard tonneau and flipper doors, must all be in alignment with each other in order to achieve the proper design positions. When one or more of these components are adjusted or replaced, the alignment of the other subject parts must be checked and readjusted if necessary.

When adjusting or replacing the trim parts, the hardtop should be open (stowed) and the hard tonneau closed.

The hard tonneau MUST be adjusted correctly before attempting any adjustment of the trim parts. The hard tonneau flipper doors must be checked and readjusted, if necessary, after adjusting the other trim components. For adjustment of the flipper doors, refer to GROUP 42 - ADJUSTMENT OF HARD TONNEAU FLIPPER DOORS, in this Manual.

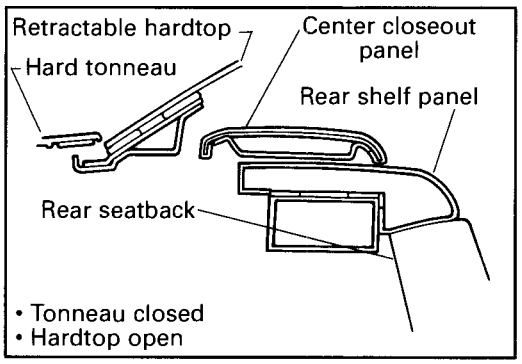

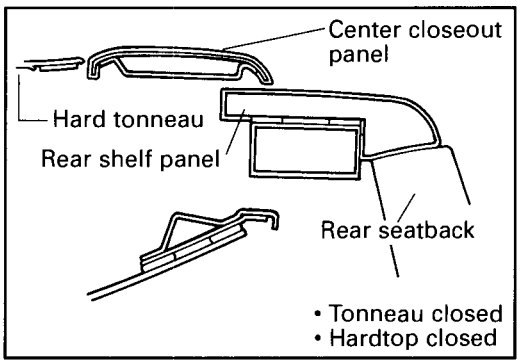

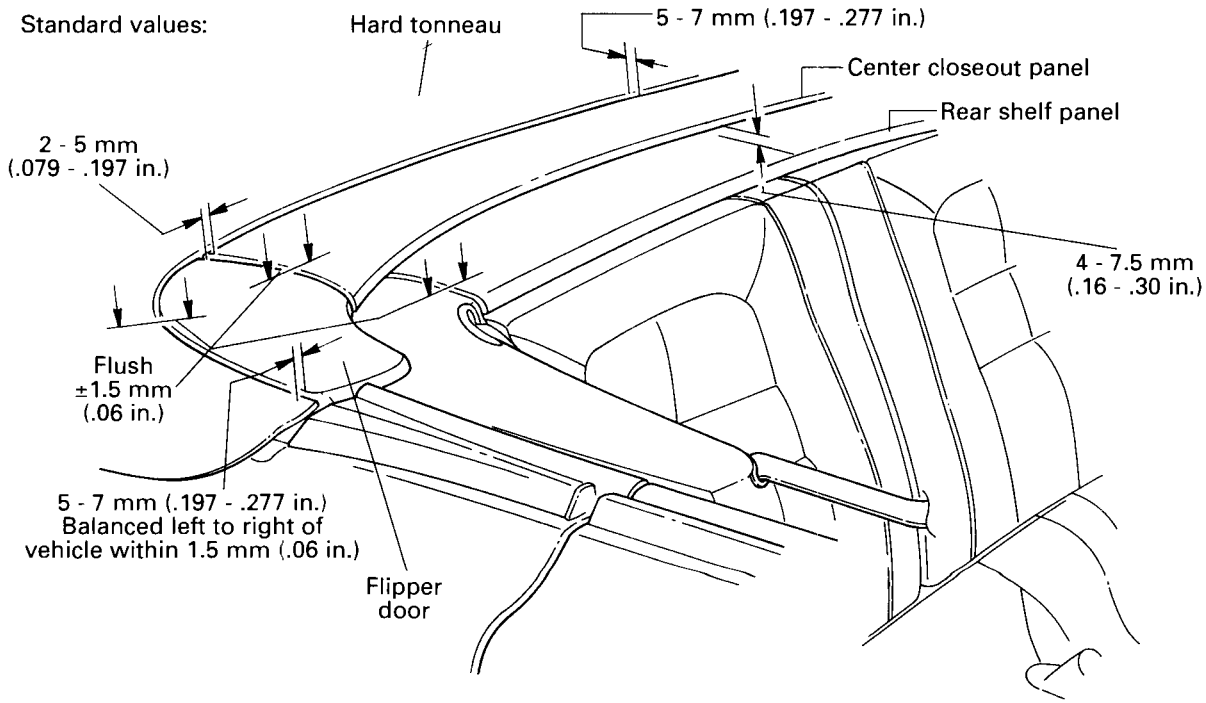

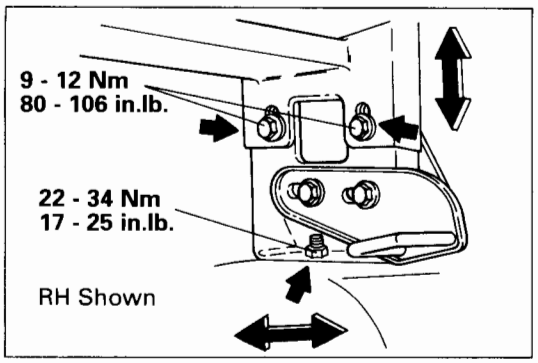

REAR SHELF PANEL

1. Install the LH and RH quarter trim panels, except the top rear screws.
2. Loosen the attaching nuts and bolts for the rear shelf panel in order to align the rear shelf panel to the screw hole at the top of the quarter trim panel. The quarter trim panels determine the position of the rear shelf panel. Refer to QUARTER TRIM PANEL, in this section.
3. Tighten attaching nuts and bolts.

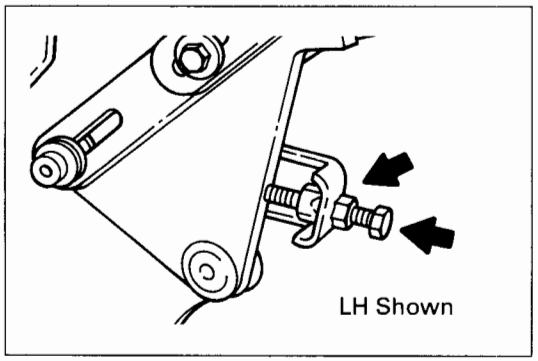

CENTER CLOSEOUT PANEL

1. Close the hardtop and open the tonneau.
2. Loosen the jam-nut of the center closeout's LH and RH stops and back-off the stop several turns.
3. Open the hardtop and close the tonneau.

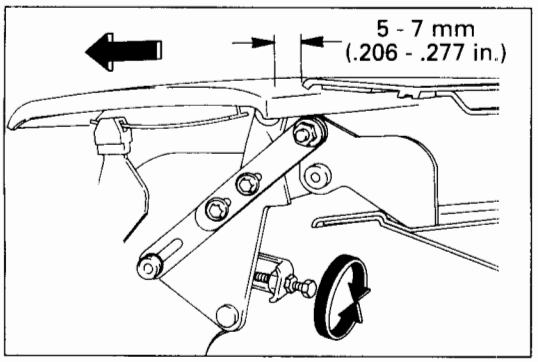

4. Move the center closeout panel rearward toward the hard tonneau until it stops.

   NOTE
   The center closeout panel will move forward as the hardtop is being closed.

5. Close the hardtop then open it.
6. Using the LH and RH stops, adjust the center closeout to the hard tonneau as shown in the illustration.
7. Close the tonneau and check the gap.
8. Repeat Steps 3-7 to meet the Standard value, then tighten the jam-nuts.

   Standard value: 9 - 14 Nm (80 - 124 in.lb.)

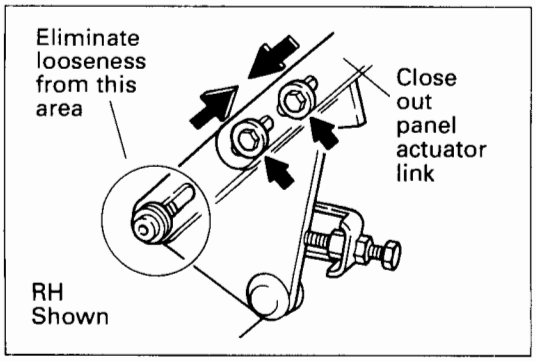

9. With the hardtop open, at one side, loosen the two bolts holding closeout panel actuator link to the closeout panel control link as shown in the illustration. Then draw the two components together to take up any looseness, and tighten the bolts. Repeat for the other side.

   NOTE
   Taking out the looseness is necessary for proper consistent operation. Otherwise, the center closeout panel will not move consistently back and forth and side-to-side. This may cause an unacceptable rattle.

   Standard value: 9 - 14 Nm (80 - 124 in.lb.)

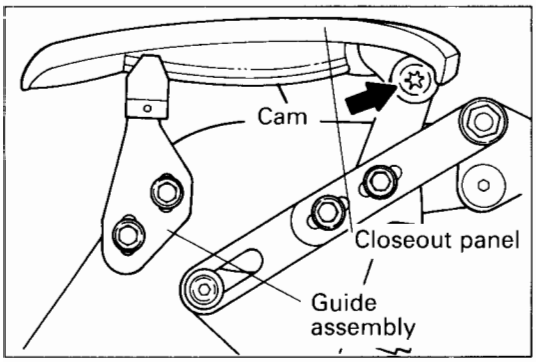

5. Adjust the height of the center closeout panel, as necessary, as shown in the illustration.

   NOTE
   Because of the nature of the cams and mechanisms, the adjustment height of the center closeout panel in the forward position will be the same as the rearward position.

   Guide assembly bolts
   Standard value: 9 - 12 Nm (80 - 106 in.lb.)

   Rear mounting bolts
   Standard value: 9 - 14 Nm (80 - 124 in.lb.)

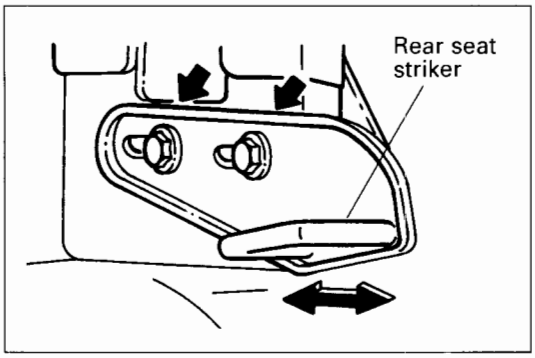

REAR SEAT STRIKERS

NOTE
The rear shelf panel MUST be properly adjusted before attempting to adjust rear seat strikers.

1. With both rear seat backs installed, fold them forward.
2. Loosen the bolts holding the striker at one side enough to adjust the striker.
3. Raise the seat back while aligning it to the striker. Adjust the striker to align the seat back catch and lock the rear seat back in position. Then tighten the bolts.

   Standard value: 9 - 12 Nm (80 - 106 in.lb.)

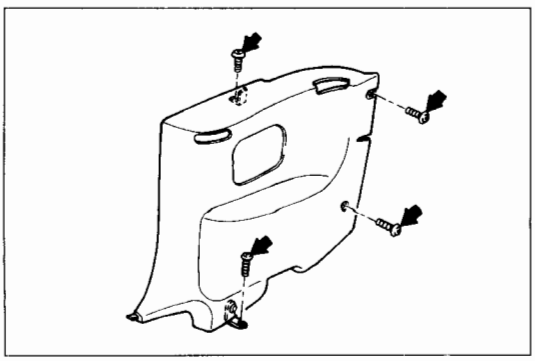

QUARTER TRIM PANELS

The quarter trim panels are not necessarily designed to be adjusted. When adjustment is necessary, the attaching holes and the corresponding hole locations in the brackets or body structure may need to be redrilled.

REMOVAL AND INSTALLATION

<Interior>

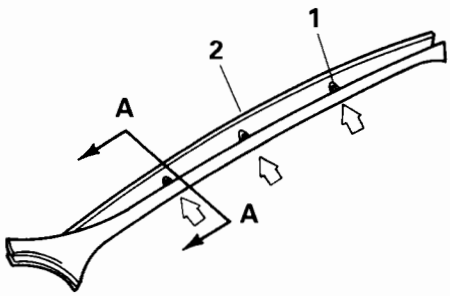

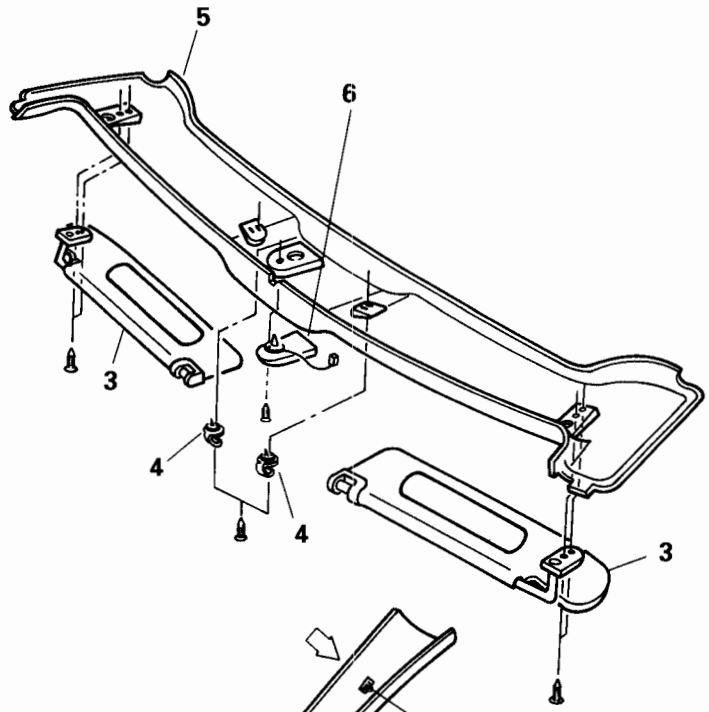

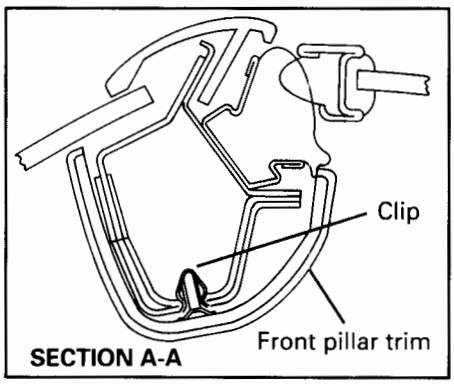

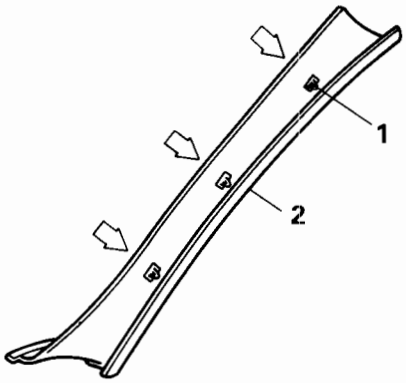

Front pillar trim removal steps

1. Clip
2. Front pillar trim

Header garnish removal steps

2. Front pillar trims
3. Sunvisor assemblies
4. Sunvisor holders
5. Header garnish
6. HomeLink™ Universal Transmitter

NOTE
(1) ⇦ : Location of metallic clip

<Self-dimming Lighted Rearview Mirror>

Pre-removal and Post-installation Operation
- Removal and Installation of Header Garnish (Refer to P. 52-8, in this section.)

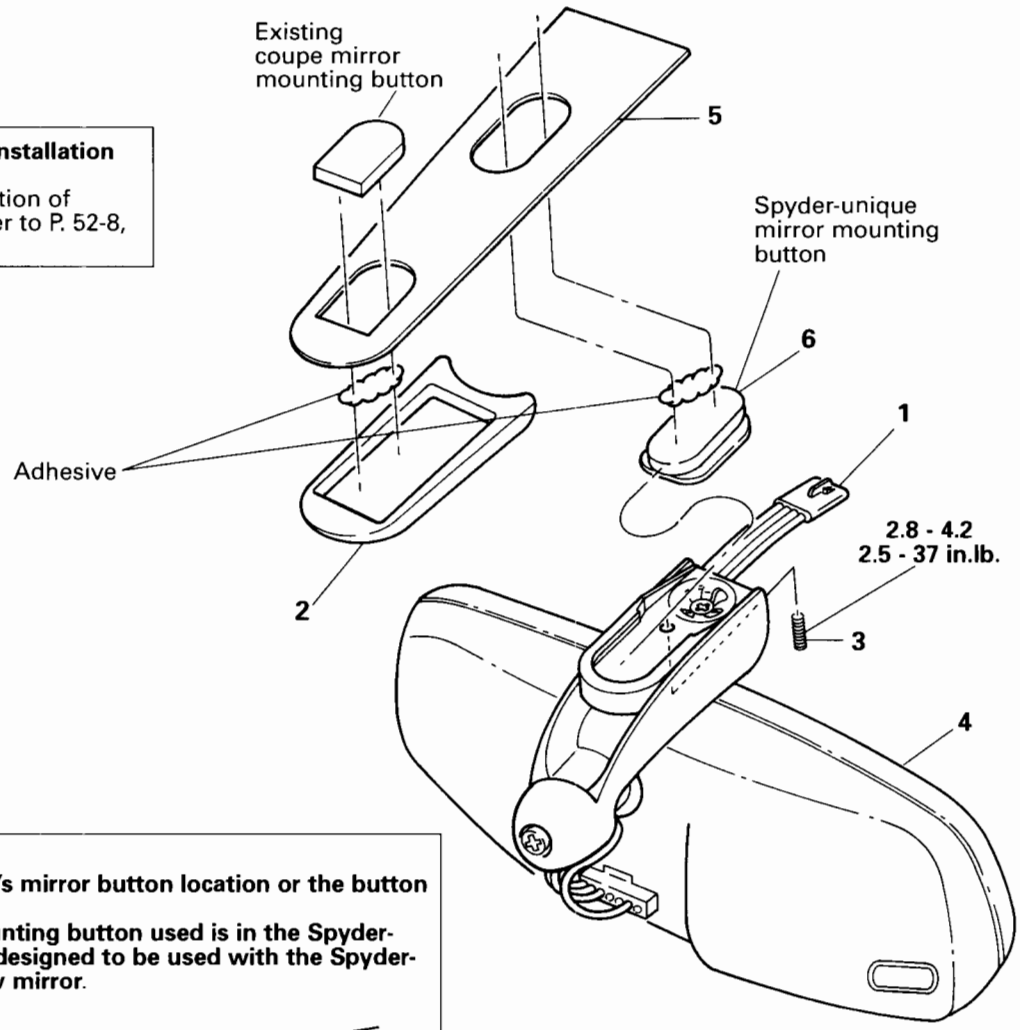

CAUTION:
1. **DO NOT use the coupe's mirror button location or the button itself.**
2. **Be sure the mirror mounting button used is in the Spyder-unique location and is designed to be used with the Spyder-unique lighted rearview mirror.**

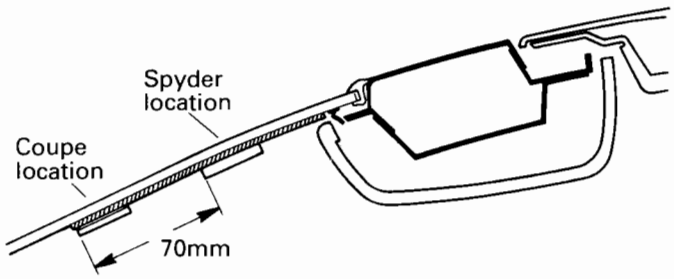

Self-dimming lighted rearview mirror removal steps

1. Mirror electrical connector
2. Lower mirror garnish
3. Mirror set screw
4. Mirror
5. Black-out applique
6. Mirror mounting button

SERVICE POINT OF REMOVAL

2. REMOVAL OF LOWER MIRROR GARNISH

Grip the garnish with pliers and twist off the garnish to separate the adhesive bond.

SERVICE POINTS OF INSTALLATION

6. 5. INSTALLATION OF BLACK-OUT APPLIQUE/INSTALLATION OF MIRROR MOUNTING BUTTON

NOTE
(1) The header garnish must be removed prior to installation.
(2) For best results the windshield should be at least room temperature.

1. Using a clean, lint-free cloth dampened with isopropyl alcohol, clean the area of the windshield where the mounting button and black-out applique will go.
2. Peel back the lower half of the protective backing from the black-out applique (rounded end).
3. Apply the exposed portion around the existing Coupe button while peeling away the remaining backing. Use gentle but firm pressure to smooth out any air bubbles. Air bubbles can be removed easily by pricking them with a needle and smoothing them out.
4. Apply the mirror button in the opening in the applique. Use an adhesive specifically made for bonding mirror buttons to windshields. Follow the manufacturer's directions.

2. INSTALLATION OF LOWER MIRROR GARNISH

Use an adhesive suitable for bonding plastic to metal such as an acrylic-based two-part epoxy.

Pre-removal and Post-installation Operation
- Removal and Installation of Scuff Plate
- Open tonneau and leave open for removal and installation of Quarter Trim Panel.

<Quarter trim panel>

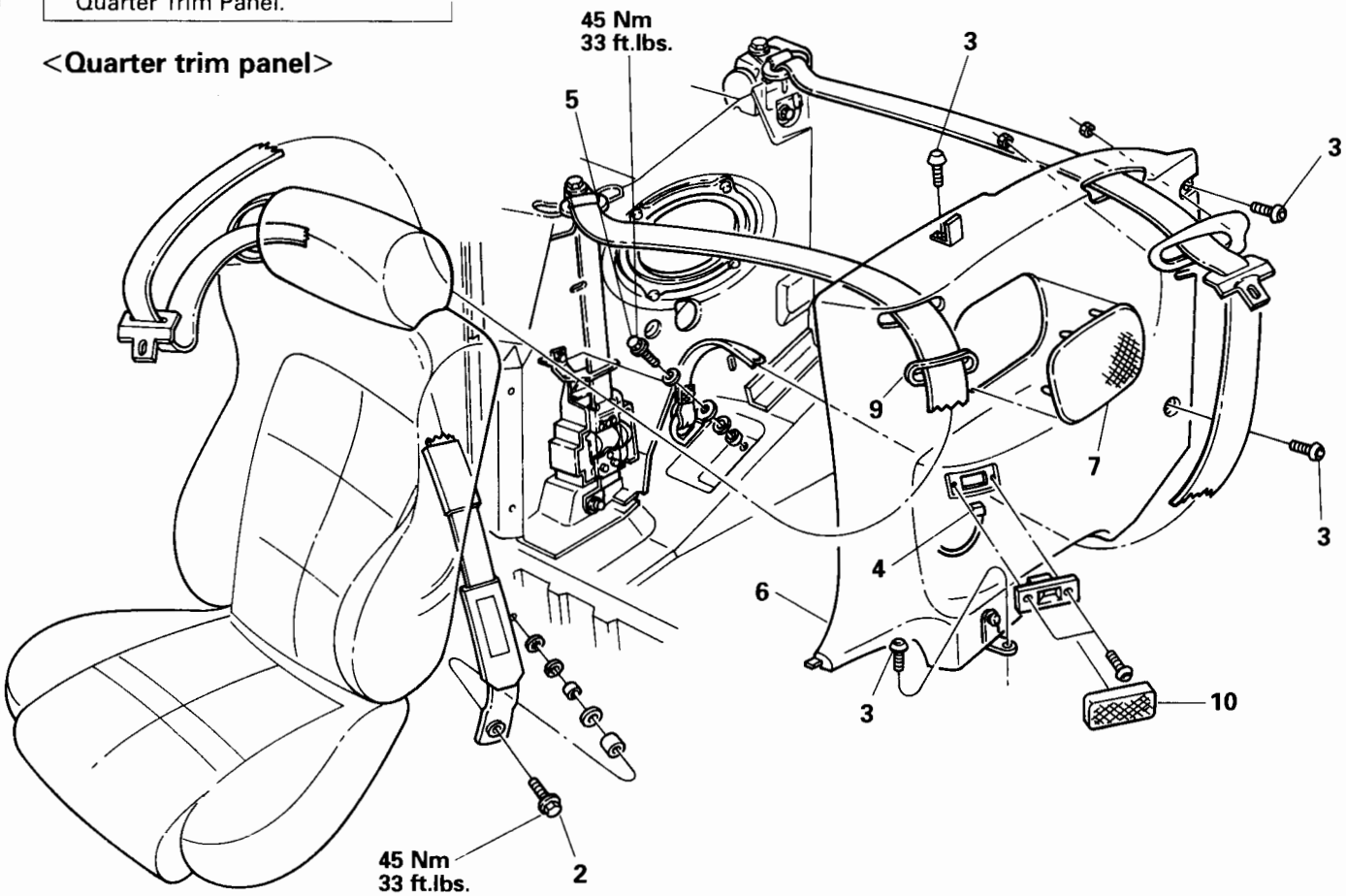

Quarter trim panel removal steps

◆◆ ◆◆ 1. Rear seat cushion
2. Front seat belt anchor plate mounting bolt
3. Screw
4. Courtesy light harness connector
5. Rear seat belt anchor plate mounting bolt
6. Quarter trim panel

Disassembly steps

◆◆ 7. Speaker cover
8. Bezel
9. Bezel
10. Courtesy light

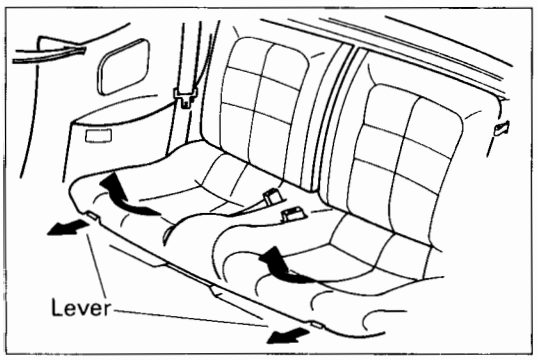

SERVICE POINT OF REMOVAL

1. REMOVAL OF REAR SEAT

With the lever pulled forward, raise the seat cushion to remove it.

SERVICE POINTS OF INSTALLATION

7. INSTALLATION OF SPEAKER COVER

Note: The Spyder-unique quarter trim panel uses the opposite-handed coupe speaker cover. (The LH coupe speaker cover attaches to the RH quarter trim panel.)

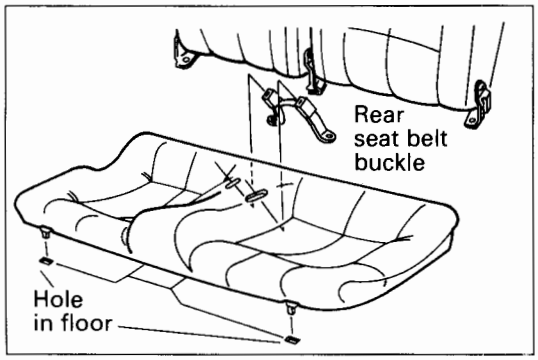

1. INSTALLATION OF REAR SEAT

(1) Fit the seat cushion attachment wire under the seat-backs securely.
(2) Pass the rear seat belt buckles through the seat cushion.
(3) Securely attach the seat cushion lock plate to the floor.

<Cargo/hardtop stowage area>

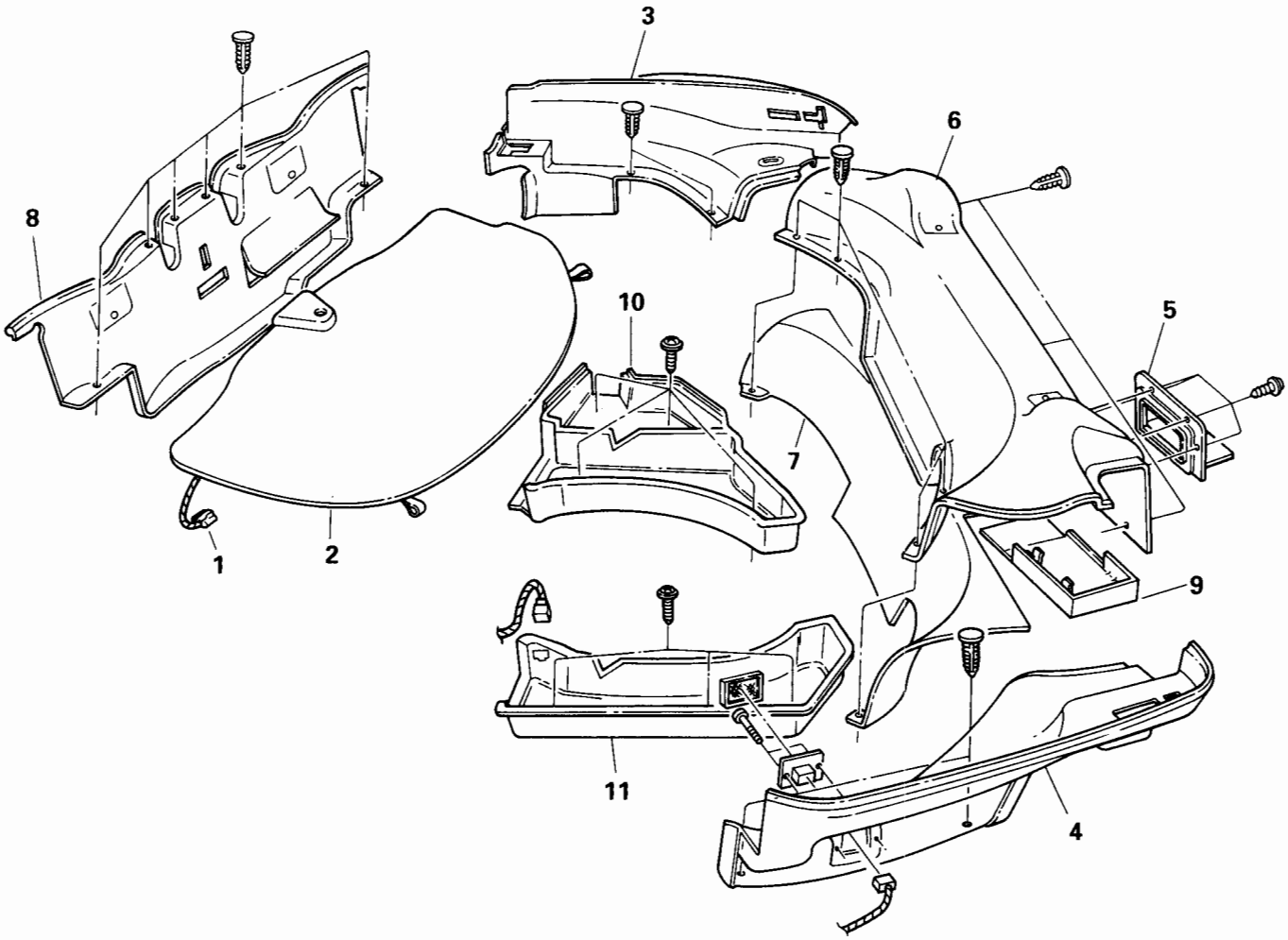

Removal steps

1. Object-in-trunk sensor harness connector
2. Object-in-trunk sensor
3. ◆▶ ▶◆ L.H. trunk trim panel
4. R.H. trunk trim panel
5. CD access door
6. Trunk center front panel
7. Hydraulic line cover
8. ◆▶ ▶◆ Trunk trim rear panel
9. CD changer tray
10. Luggage compartment floor box (L.H.)
11. ◆▶ ▶◆ Luggage compartment floor box (R.H.)

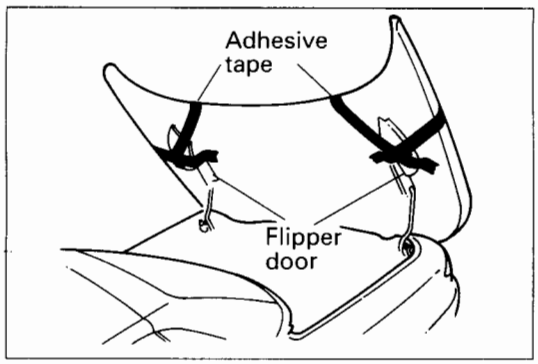

SERVICE POINTS OF REMOVAL

3. REMOVAL OF LEFT HAND TRUNK TRIM PANEL

(1) Detach the trim panel from the vehicle.
(2) Open the hardtop halfway.
(3) Secure both flipper doors to the tonneau in their retracted position with 2" wide, cloth reinforced, adhesive tape (such as a good quality duct tape or stranded packaging tape). This will relieve tension on the flipper door drive cable allowing easy removal and reinstallation of the cable clevis attached to the hardtop mechanism.

Caution
Stay clear of the flipper doors to prevent personal injury.

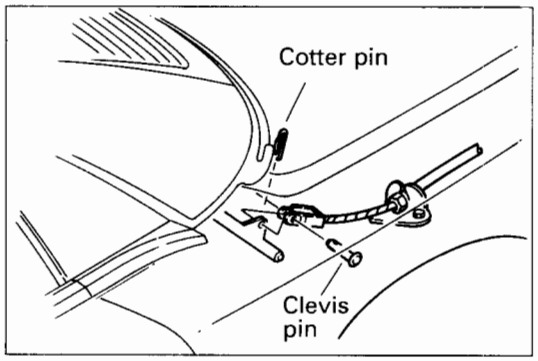

(4) Remove the cotter pin and clevis pin securing the flipper door cable clevis to the hardtop mechanism.
(5) Pull the cable through the trim panel to remove it.

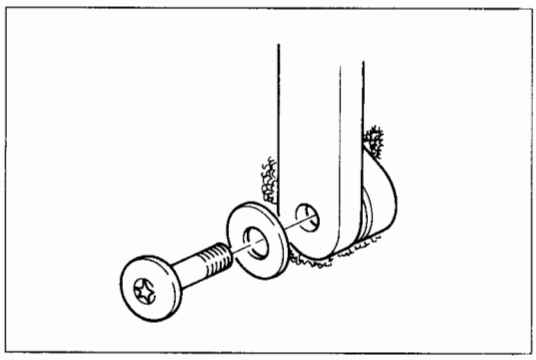

7. REMOVAL OF TRUNK TRIM REAR PANEL

Remove the bolt attaching the hardtop down stop link to the bracket and remove the trim panel.

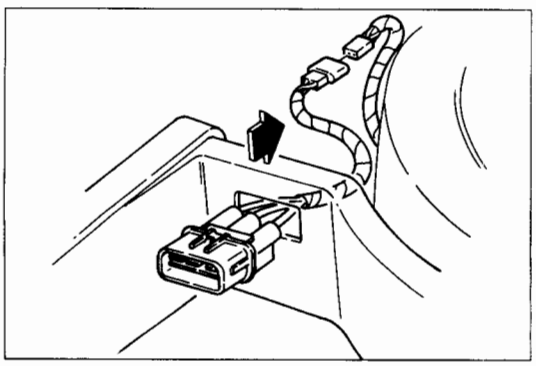

10. REMOVAL OF LUGGAGE COMPARTMENT FLOOR BOX

(1) Disconnect the object-in-trunk sensor harness connector.
(2) Using a small tool, release the tangs in the object-in-trunk sensor harness connector mounted on the floor box connector bracket. Then, remove the floor box.

SERVICE POINTS OF INSTALLATION

10. INSTALLATION OF LUGGAGE COMPARTMENT FLOOR BOX

(1) Install the floor box.
(2) Reinstall the object-in-trunk sensor harness connector in the floor box.
(3) Reconnect the harness connector.

7. INSTALLATION OF TRUNK TRIM REAR PANEL

Attach the trim, then install the hardtop down stop link to the bracket with the bolt.

Standard value: 6 - 9 Nm (54 - 80 in.lb.)

3. INSTALLATION OF LEFT HAND TRUNK TRIM PANEL

(1) Route the flipper door drive cable back through the trunk trim.
(2) Reattach the cable clevis to the hardtop mechanism using the clevis pin and cotter pin.
(3) Hold the flipper door securely and remove the adhesive tape.
(4) Attach the trim panel to the vehicle.
(5) Open or close the hardtop.

FRONT SEATS

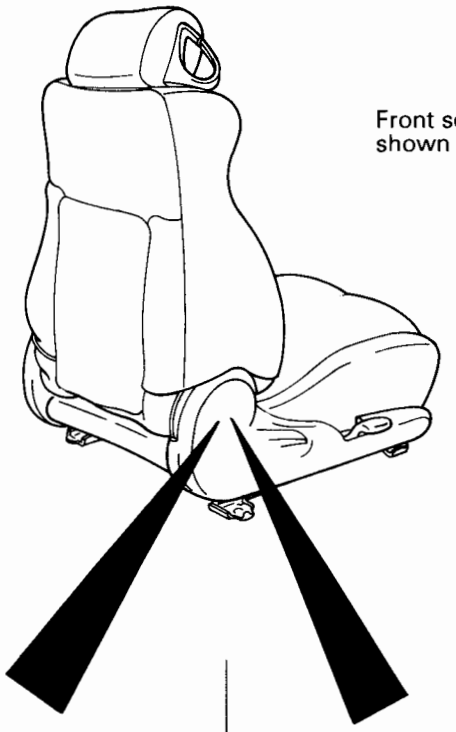

Front seat (passenger side shown - driver side similar)

Pre-removal and Post-installation Operation
- Removal and Installation of Front Seat (Refer to GROUP 52A, in Volume 1.)

<Vehicles with riveted-on recline-angle stop>

<Repair for vehicles with welded-on recline-angle stop>

<Vehicles with welded-on recline-angle stop>

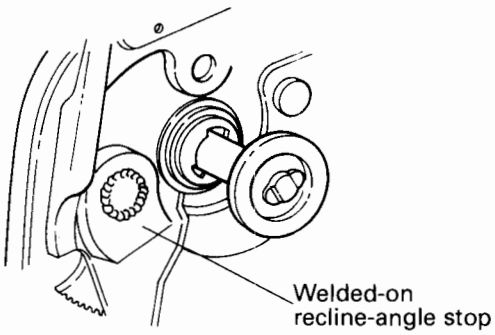

CAUTION:
1. **The LH and RH front seats have been modified with a recline-angle stop welded to the seat reclining adjuster assembly.**
2. **The recline-angle stop is not serviceable.**
3. **DO NOT attempt to repair the recline-angle stop. Replace the seat with a modified Spyder-unique seat, or repair the recline-angle stop by following the procedure in SERVICE POINTS OF REMOVAL and INSTALLATION OF RECLINE-ANGLE STOP, in this section.**

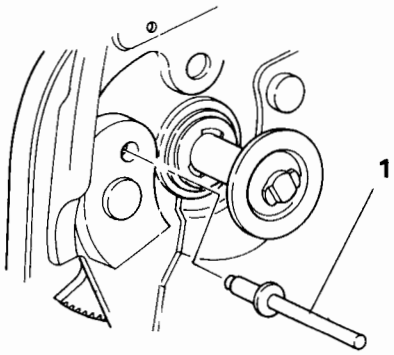

Removal steps

◆◆ ◆◆ 1. Rivet
◆◆ 2. Recline-angle stop

SERVICE POINT OF

1. **REMOVAL OF RIVET**

   Use a 3/16 in. drill to remove

   Caution
   Be sure drill chips are completely re ing the area so that they do not get ca reclining adjuster.

SERVICE POINTS OF INSTALLATION

2. **INSTALLATION OF RECLINE-ANGLE STOP**

   Seats requiring no drilling for installation of seat recline-angle stop:

   Install the seat recline-angle stop to the stop pin on the seat.

   Seats requiring drilling for installation of seat recline-angle stop:

   (1) Grind or file the stop pin on the seat, if necessary, to install the seat recline-angle stop.
   (2) Install the seat recline-angle stop to the stop pin on the seat.
   (3) Recline the seat back to apply pressure on the recline-angle stop so that it seats against the seat reclining adjuster assembly.
   (4) Using a 3/16 in. drill, use the recline-angle stop as a drill guide and drill the hole for the rivet.

   Caution
   Be sure drill chips are completely removed by vacuuming the area so that they do not get caught in the seat reclining adjuster.

1. **INSTALLATION OF RIVET**

   Rivet: 3/16" x .375 Protruding head

BELT GUIDE

DISASSEMBLY AND REASSEMBLY

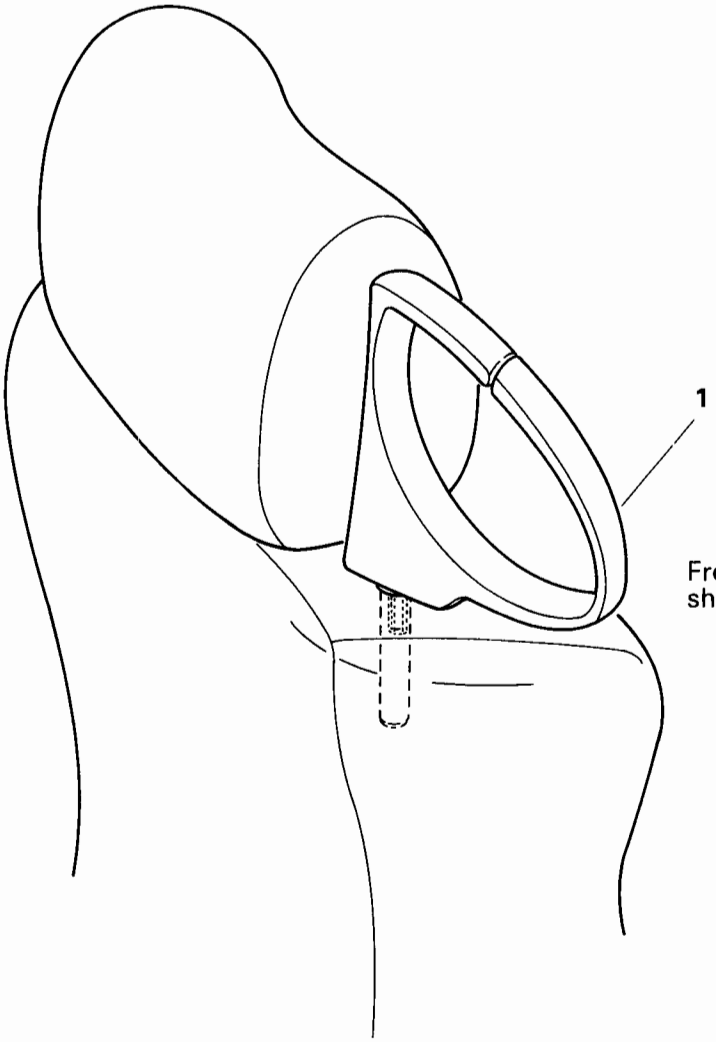

Front seat (passenger side shown - driver side similar)

Seat belt guide removal step

◆■◆ 1. Seat belt guide

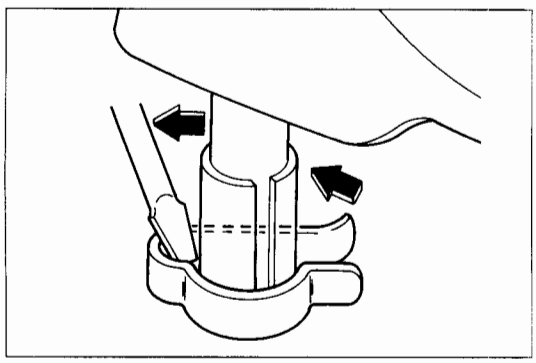

SERVICE POINT OF REMOVAL

1. REMOVAL OF SEAT BELT GUIDE

Using a screwdriver, release the retaining pin while pulling the seat belt guide out of the holder.

HEADLINING

REMOVAL AND INSTALLATION

NOTE
Open the hardtop halfway for removal and installation of headlining.

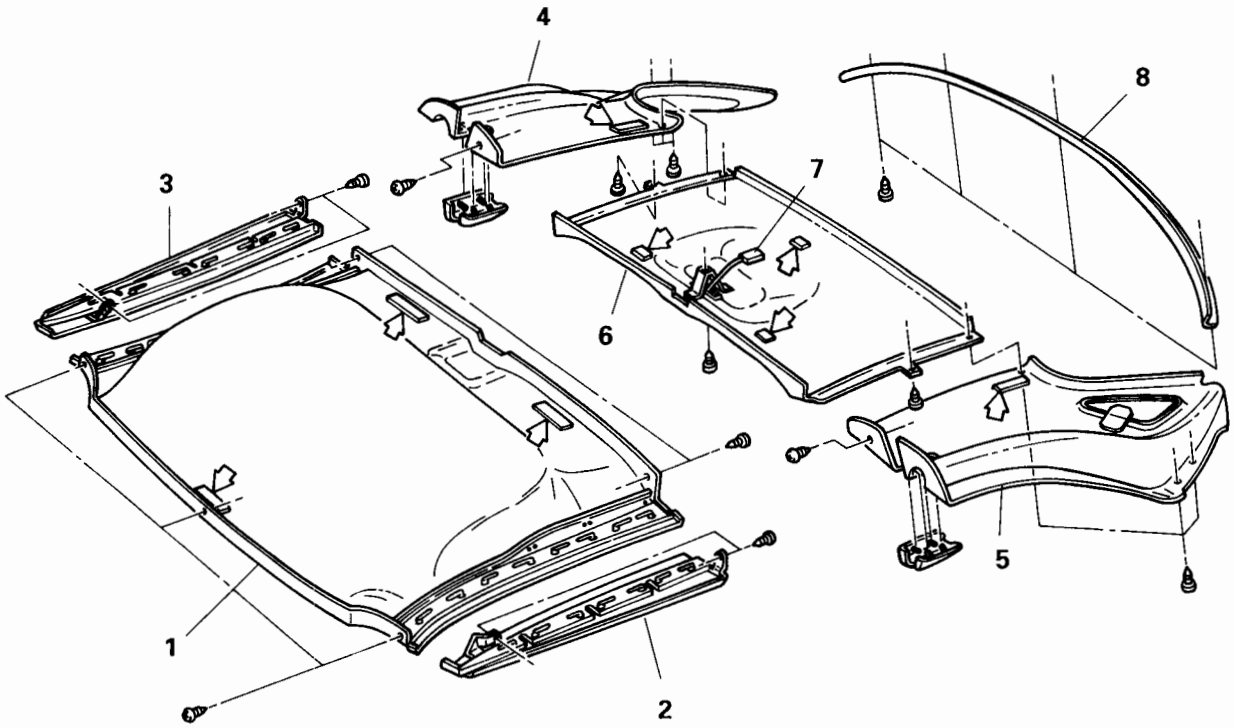

Pre-removal Operation of LH and RH Front Rail Headlining Extensions
- Removal of Front Rail Weatherstrip
- Removal of Front Rail Weatherstrip Holder (Refer to GROUP 42 - Weatherstrip, in this Manual.)

Post-installation Operation of LH and RH Front Rail Headlining Extensions
- Installation of Front Rail Weatherstrip (Refer to GROUP 42 - Weatherstrip, in this Manual.)
- Adjustment of Front Rail Weatherstrip (Refer to SERVICE ADJUSTMENT PROCEDURES, GROUP 42, in this Manual.)

Headlining removal steps

1. Front headlining
2. LH front rail headlining extension
3. RH front rail headlining extension
4. RH rear headlining
5. LH rear headlining
6. Center headlining
7. Temperature sensor harness connector
8. Backlite lower garnish

NOTE
(1) ⇦ : Location of dual lock fastener

REAR SEAT, STRIKER AND REAR SHELF PANEL

REMOVAL AND INSTALLATION

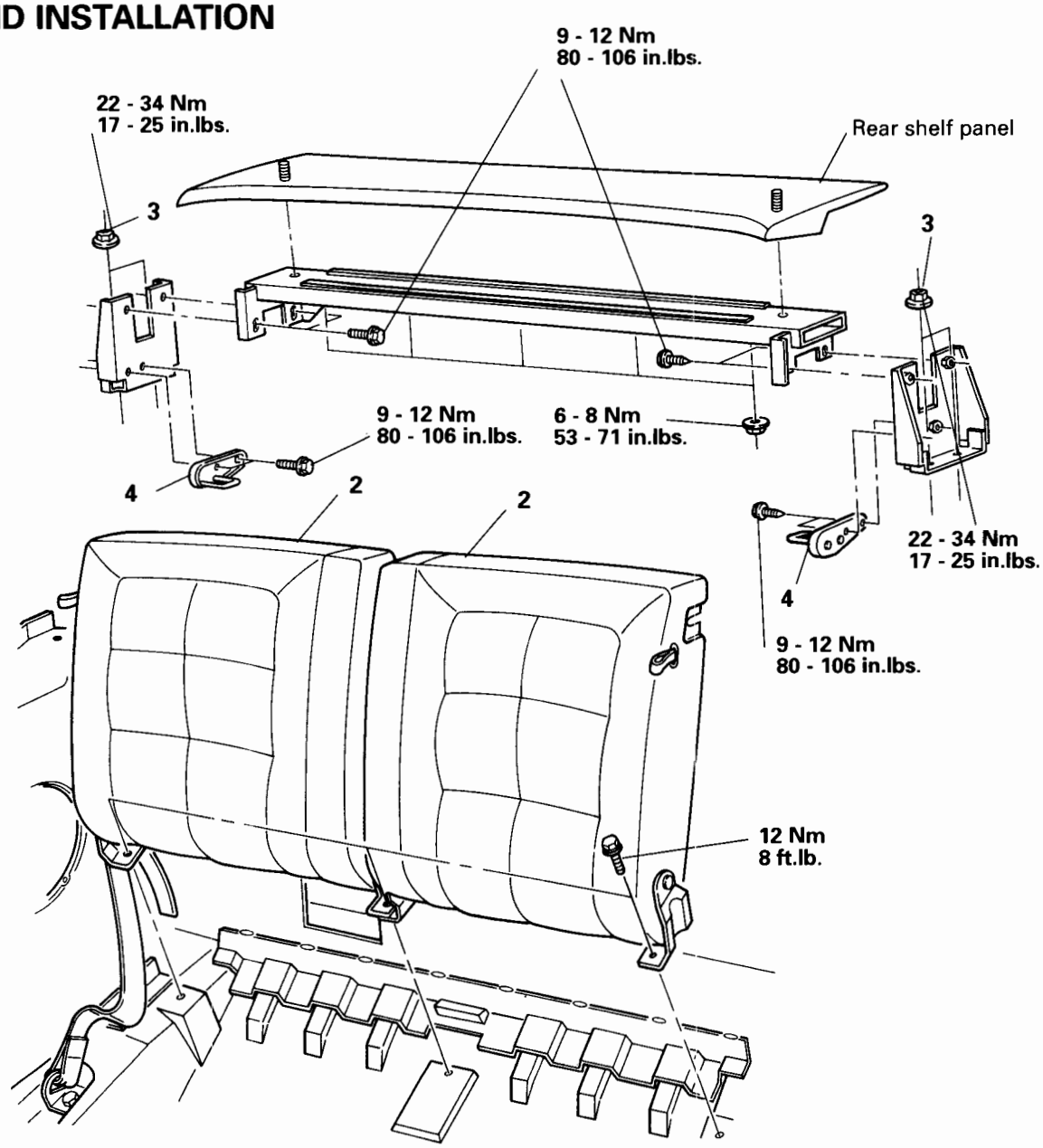

Pre-removal Operation of Rear Shelf Panel
- Removal and Installation of Center Closeout Panel (Refer to P.52-24, in this section).
- Removal of LH and RH Quarter Trim Panels (Refer to P.52-13, in this section).

Post-installation Operation of Striker and Rear Shelf Panel
- Rear Seat Striker Adjustment (Refer to SERVICE ADJUSTMENT PROCEDURES, in this section).
- Rear Shelf Panel Adjustment (Refer to SERVICE ADJUSTMENT PROCEDURES, in this section).
- Installation of LH and RH Quarter Trim Panels (Refer to P.52-13, in this section.)

NOTE
Matchmark components before removal or disassembly.

Rear seat removal steps

1. Rear seat cushion
2. Rear seat back

Rear shelf panel removal step

3. Nuts

Striker removal step

4. Striker

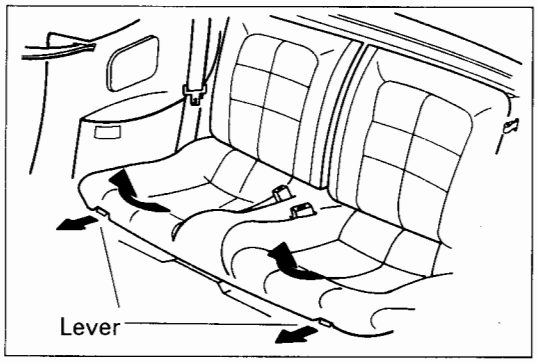

SERVICE POINT OF REMOVAL

1. REMOVAL OF REAR SEAT

With the lever pulled forward, raise the lower seat cushion to remove it.

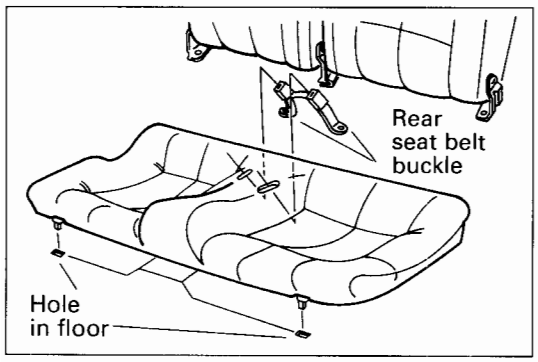

SERVICE POINT OF INSTALLATION

1. INSTALLATION OF REAR SEAT

(1) Fit the seat cushion attachment wire under the seatbacks securely.
(2) Pass the rear seat belt buckles through the seat cushion.
(3) Securely attach the seat cushion lock plate to the floor.

CENTER CLOSEOUT PANEL

REMOVAL AND INSTALLATION

Post-installation Operation
- Center Closeout Panel Adjustment (Refer to SERVICE ADJUSTMENT PROCEDURES, in this section.)

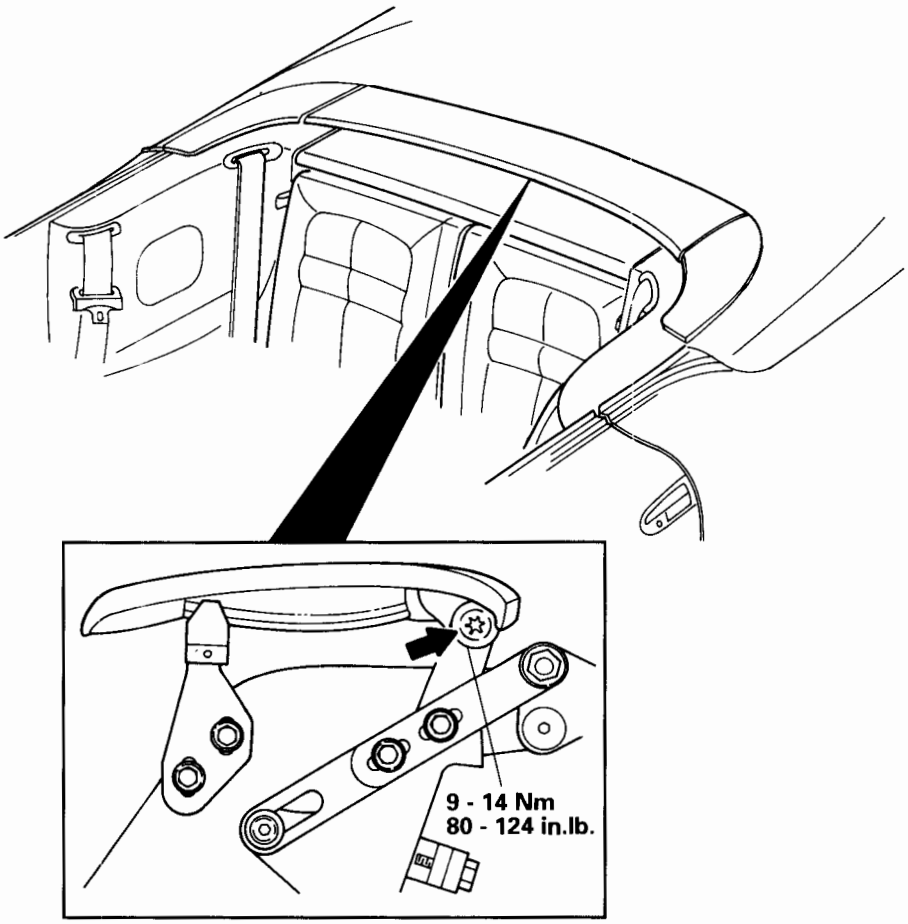

Removal step

1. Bolt

DISASSEMBLY AND REASSEMBLY

<Center closeout panel>

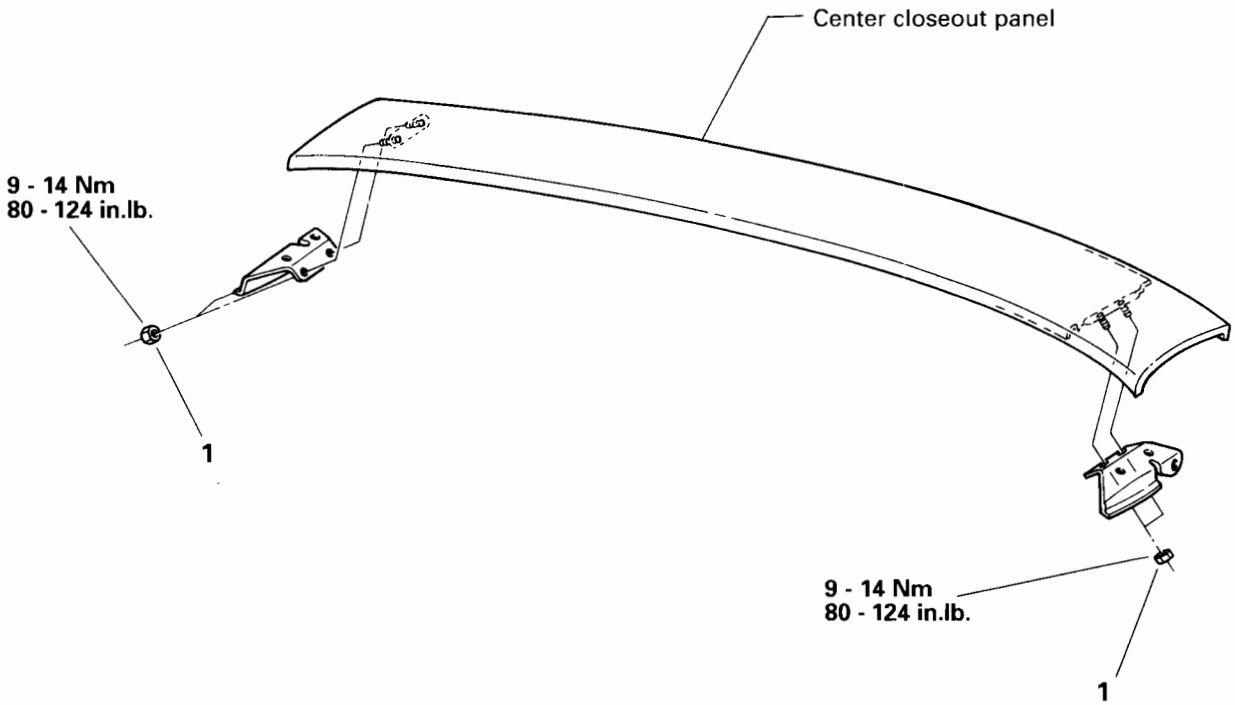

Disassembly step

1. Nut

DISASSEMBLY AND ASSEMBLY

<Mechanism>

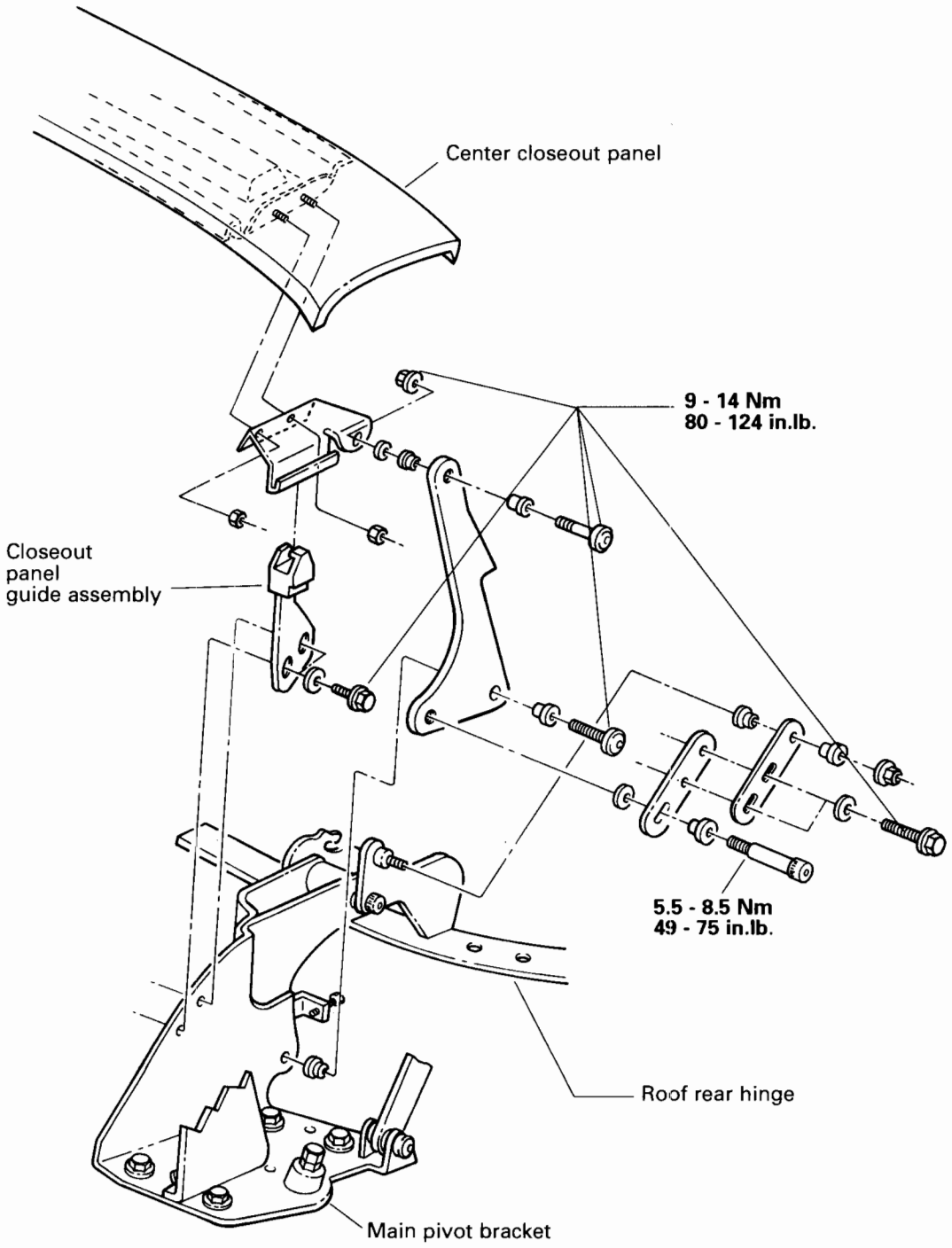

SEAT BELT

REMOVAL AND INSTALLATION

<Front Seat Belt>

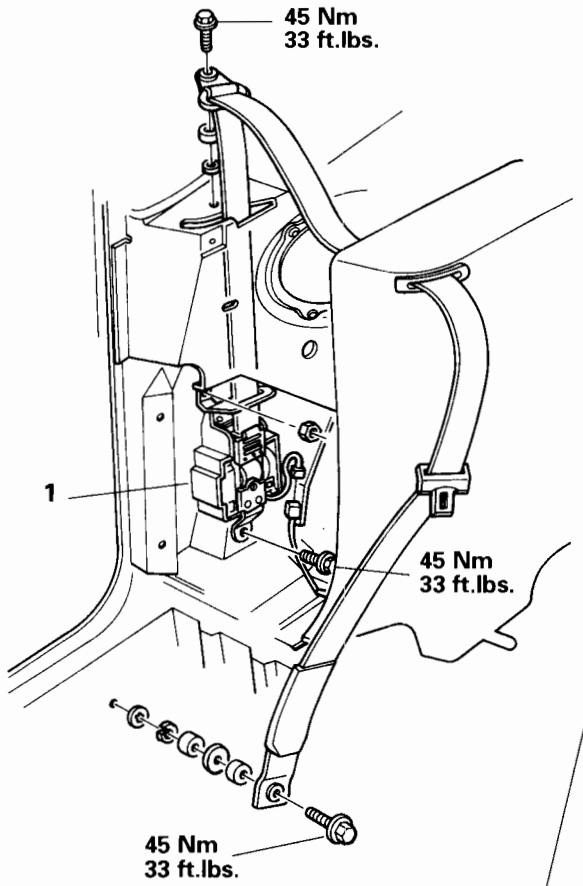

Pre-removal and Post-installation Operation
- Removal and Installation of Quarter Trim Panel (Refer to P.52-13, in this section).

Outer seat belt removal step

1. Outer seat belt

CAUTION:
Do not interchange seat belts side-to-side or front-to-back.

<Rear Seat Belt>

Pre-removal and Post-installation Operation
- Removal and Installation of Quarter Trim Panel (Refer to P.52-13, in this section).

Outer seat belt removal steps

1. Speaker
2. Outer seat belt

CAUTION:
Do not interchange seat belts side-to-side or front-to-back.

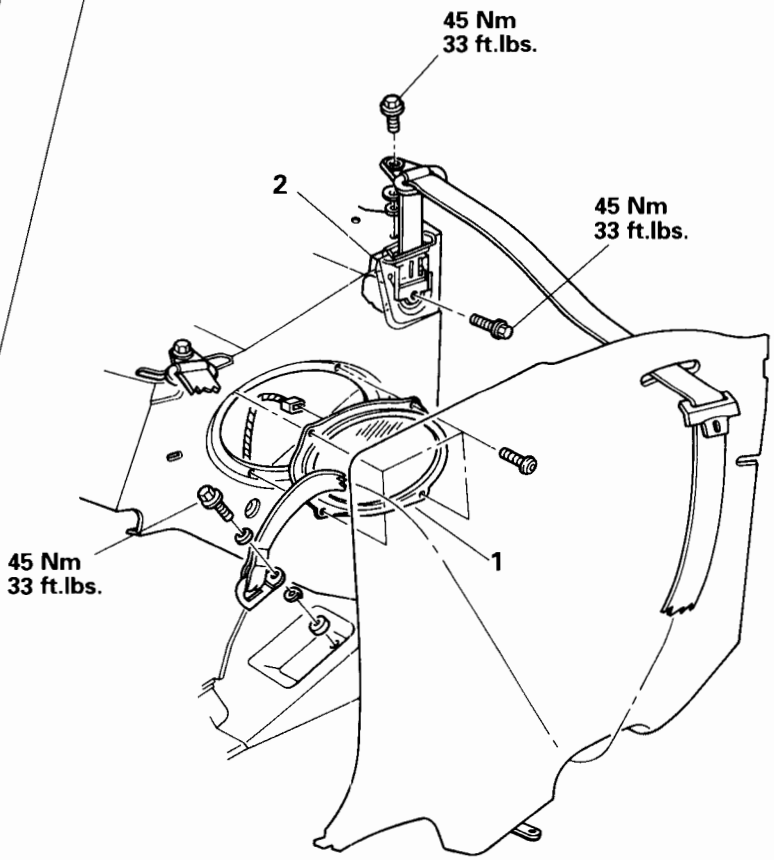

NOTES

CHASSIS ELECTRICAL

CONTENTS

CARGO/HARDTOP STOWAGE AREA LIGHT **22**

CD CHANGER **15**

DIAGNOSTICS AND TESTING **5**

Circuit Diagrams 11

Cargo/hardtop Stowage Area Lamp 13
HomeLink™ Universal Transmitter 11
Lighted Rearview Mirror (Map Lights) .. 12

Inspection and Verification 5

Pinpoint Tests 7

Test A: Both Map Lights Inoperative with Switches 7
Test B: Map Light (One) Inoperative 8
Test C: Luggage Compartment Lamp Inoperative 9
Test D: Universal Transmitter (HomeLink™) Inoperative 10

Symptom Chart 6

Troubleshooting Hints 6

GENERAL INFORMATION **2**

Cargo/Hardtop Stowage Area Lamp System 4

CD Changer 2

Motor Antenna 3

HIGH MOUNTED STOP LIGHT **25**

HOMELINK™ UNIVERSAL TRANSMITTER .. **19**

LIGHTED REAR VIEW MIRROR (MAP LIGHTS) **14**

MOTOR ANTENNA AND RELAY **17**

QUARTER TRIM PANEL COURTESY LIGHT .. **20**

REAR COMBINATION LIGHTS **23**

REAR SPEAKER **16**

THEFT ALARM SYSTEM, LIGHT AUTOMATIC SHUT-OFF AND KEYLESS ENTRY RECEIVER ASSEMBLY (SPYDER-UNIQUE RELOCATION) **21**

CD CHANGER

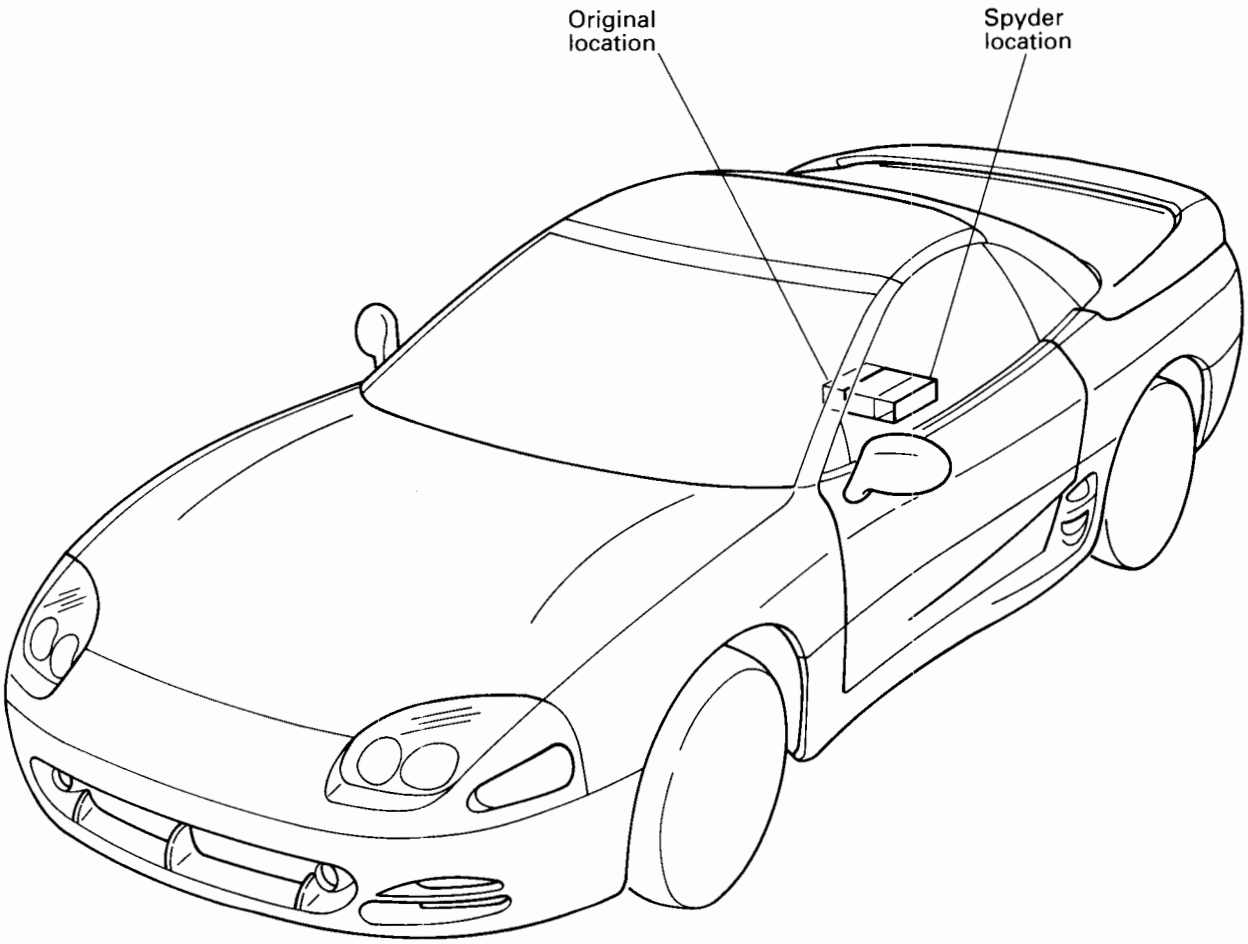

NOTE
For diagnostics and testing refer to Volume 2 of the Service Manual.

MOTOR ANTENNA

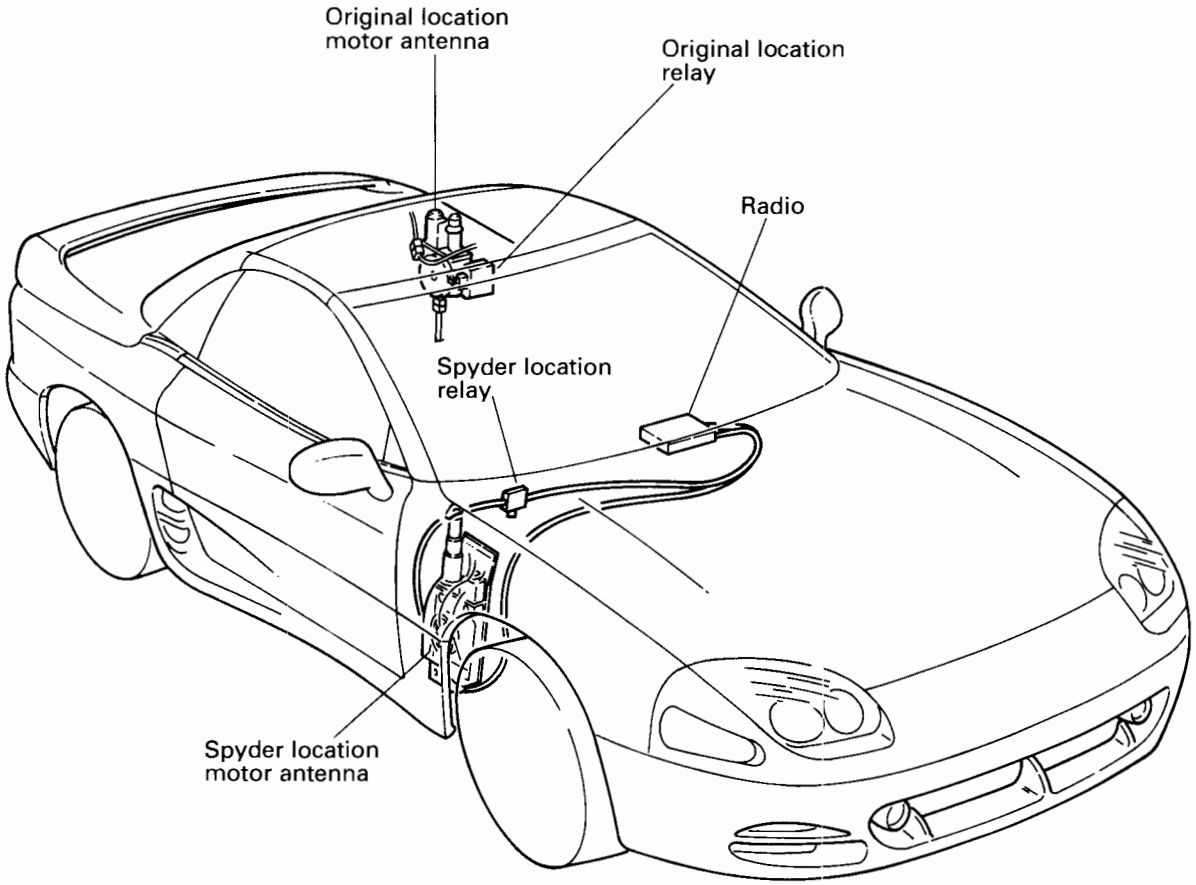

NOTE
For diagnostics and testing refer to Volume 2 of the Service Manual.

CARGO/HARDTOP STOWAGE AREA LAMP SYSTEM

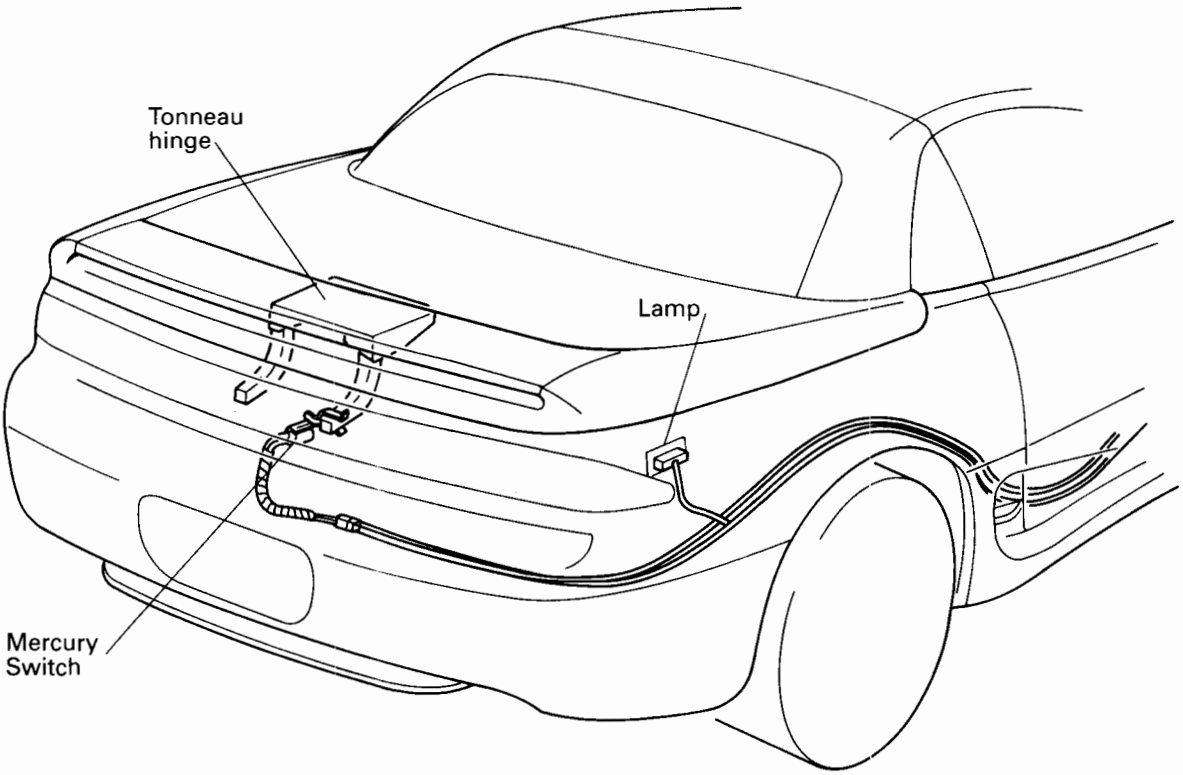

NOTE
For Configuration Diagram refer to GROUP 42, in this Manual.

INSPECTION AND VERIFICATION

1. Verify the customer's original concern by operating the system to duplicate the concern.

2. Inspect to determine if any of the following mechanical or electrical concerns apply:

MECHANICAL	ELECTRICAL
• Damaged switches. • Damaged mirror.	• Blown fuse. • Circuitry open or shorted. • Damaged switches. • Damaged bulbs. • Damaged lights. • Damaged transmitter. • Damaged mirror. • Damaged battery.

3. If the inspection reveals obvious concern(s) that can be readily identified, service as required.

4. If the concern(s) remain after inspection, determine the symptom and go to the Symptom Chart.

SYMPTOM CHART

NOTE: AFTER DETERMINING THE SYMPTOM AND PINPOINT TEST REFER TO TROUBLESHOOTING HINTS FOLLOWING THE SYMPTOM CHART

CONDITION	POSSIBLE CAUSE	ACTION
• Map lights (both) inoperative from switches.	• Circuitry open/shorted. • Damaged mirror.	• Go to Pinpoint Test A.
• Map lights (both) inoperative when doors are open.	• Circuitry open/shorted. • Damaged door switch.	• Refer to Volume 2 of Service Manual.
• Map light (one) inoperative.	• Damaged bulb. • Damaged mirror.	• Go to Pinpoint Test B.
• Luggage compartment light inoperative.	• Circuitry open/shorted. • Damaged light. • Damaged switch.	• Go to Pinpoint Test C.
• Universal transmitter HomeLink™ inoperative.	• Circuitry open/shorted. • Programmed wrong. • Damaged transmitter. • Low transmitter battery.	• Go to Pinpoint Test D.

TROUBLESHOOTING HINTS

Pinpoint Test A:

Indicates that both map lights are inoperative from map light switches. This may occur if system voltage is not supplied to circuit CR 5, ground not supplied by circuit CR 4, or damaged mirror.

Map lights (both) inoperative when doors are opened: Indicates that the map lights work from the map light switches, but not from the dome light switch, which indicates a problem in dome light circuits or door switch.

Pinpoint Test B:

Indicates that one map light is operating which indicates that voltage and ground circuits must be good. This may occur if one bulb is burned out, or damaged mirror.

Pinpoint Test C:

Indicates that the luggage compartment light does not come on when the hard tonneau is in the open position. This may occur if circuit CT 1, CT 2, are open/shorted, circuit CT 3 open, the switch damaged, bulb burnt out, or lamp damaged.

Pinpoint Test D:

This test is to verify voltage to circuit CR 1 and circuit CR 4 for good ground. If both are present then the probable cause is damaged transmitter, programming procedure, or low battery in hand-held transmitter.

PINPOINT TESTS

TEST A
BOTH MAP LIGHTS INOPERATIVE WITH SWITCHES

TEST STEP		RESULT ▶	ACTION TO TAKE
A-1	CHECK CIRCUIT CR 1 FOR SYSTEM VOLTAGE		
NOTE: Remove and inspect map light bulbs before continuing. • Access and disconnect rearview mirror connector E-127. • Using Digital Volt/Ohm Meter (DVOM) set to DC volt, connect negative lead to a known good ground. • Connect the positive lead to pin 7 at rearview mirror connector E-127. • Read voltmeter. • **Is system voltage present?**		Yes ▶ No ▶	Go to **A-2.** Repair circuit CR 1. Restore vehicle. Retest system.
A-2	CHECK CIRCUIT CR 4 FOR OPEN		
• Connector E-127 at rearview mirror disconnected. • Using DVOM set to ohm scale, connect negative lead to known good ground. • Connect positive lead to pin 2 at rearview mirror connector E-127. • Read ohmmeter. • **Is there 3 ohms or less?**		Yes ▶ No ▶	Replace rearview mirror. Restore vehicle. Retest system. Repair circuit CR 4. Restore vehicle. Retest system.

PINPOINT TESTS

TEST B
MAP LIGHT (ONE) INOPERATIVE

TEST STEP		RESULT ▶	ACTION TO TAKE
B-1	CHECK MAP LIGHT BULB		
• Access and remove suspect map light bulb. • Inspect map light bulb. • **Is map light bulb good?**		Yes ▶	Replace rearview mirror. Restore vehicle. Retest system.
		No ▶	Replace bulb. Restore vehicle. Retest system.

PINPOINT TESTS

TEST C
LUGGAGE COMPARTMENT LAMP INOPERATIVE

TEST STEP		RESULT ▶	ACTION TO TAKE
C-1	CHECK CIRCUIT CT 2 AT LUGGAGE COMPARTMENT LAMP		
NOTE: Remove and inspect light bulb before continuing. • Open hard tonneau. • Access cargo lamp connector F-08. • Using Digital Volt/Ohm Meter (DVOM) set to DC volt, connect negative lead to a known good ground. • Back probe and connect the positive lead to pin 1 at luggage compartment lamp connector F-08. • Read voltmeter. • **Is system voltage present?**		Yes ▶ No ▶	Go to **C-2**. Go to **C-3**.
C-2	CHECK CIRCUIT CT 3 AT LUGGAGE COMPARTMENT LAMP		
• Hard tonneau open. • Disconnect luggage compartment lamp connector F-08. • Using DVOM set to DC volt, connect negative lead to pin 2 at luggage compartment lamp connector F-08. • Connect positive lead to pin 1 at luggage compartment lamp connector F-08. • Read voltmeter. • **Is system voltage present?**		Yes ▶ No ▶	Replace luggage compartment lamp. Restore vehicle. Retest system. Repair circuit CT 3. Restore vehicle. Retest system.
C-3	CHECK CIRCUIT CT 2 AT LUGGAGE COMPARTMENT LAMP SWITCH		
• Hard tonneau open. • Access luggage compartment lamp switch connector F-116. • Using DVOM set to DC volt, connect negative lead to a known good ground. • Back probe and connect the positive lead to pin A at luggage compartment lamp switch connector F-116. • Read voltmeter. • **Is system voltage present?**		Yes ▶ No ▶	Repair circuit CT 2. Restore vehicle. Retest system. Go to **C-4**.
C-4	CHECK CIRCUIT CT 1 AT LUGGAGE COMPARTMENT LAMP SWITCH		
• Access luggage compartment lamp switch. • Using DVOM set to DC volt, connect negative lead to a known good ground. • Connect positive lead to pin B at luggage compartment lamp switch connector F-116. • Read voltmeter. • **Is system voltage present?**		Yes ▶ No ▶	Replace luggage compartment lamp switch. Restore vehicle. Retest system. Refer to Volume 2 of Service Manual (for repair of dome light circuit).

PINPOINT TESTS

TEST D
UNIVERSAL TRANSMITTER (HOMELINK™) INOPERATIVE

TEST STEP		RESULT ▶	ACTION TO TAKE
D-1	CHECK CIRCUIT CR 1 FOR SYSTEM VOLTAGE		
NOTE: This test should only be done after CAREFULLY following HomeLink™ Universal Transmitter Training Techniques found in Section 00 of this Manual. • Access and disconnect connector E-112 to the HomeLink™ Universal Transmitter. • Using Digital Volt/Ohm Meter (DVOM) set to DC volt, connect negative lead to a known good ground. • Connect the positive lead to pin A at HomeLink™ Universal Transmitter, connector E-112. • Read voltmeter. • **Is system voltage present?**		Yes ▶ No ▶	Go to **D-2**. Refer to Volume 2 of Service Manual, Lighting System (for dome light circuit repair).
D-2	CHECK CIRCUIT CR 4 FOR OPEN		
• Connector to HomeLink™ Universal Transmitter disconnected. • Using DVOM set to ohm scale, connect negative lead to known good ground. • Connect positive lead to pin B at HomeLink™ Universal Transmitter, connector E-112. • Read ohmmeter. • **Is there 3 ohms or less?**		Yes ▶ No ▶	Circuits check okay. Restore vehicle. Refer to HomeLink™ Universal Transmitter Training Techniques found in Section 00 of this Manual. Repair circuit CR 4. Restore vehicle. Retest system.

HomeLink™ UNIVERSAL TRANSMITTER CIRCUIT DIAGRAM

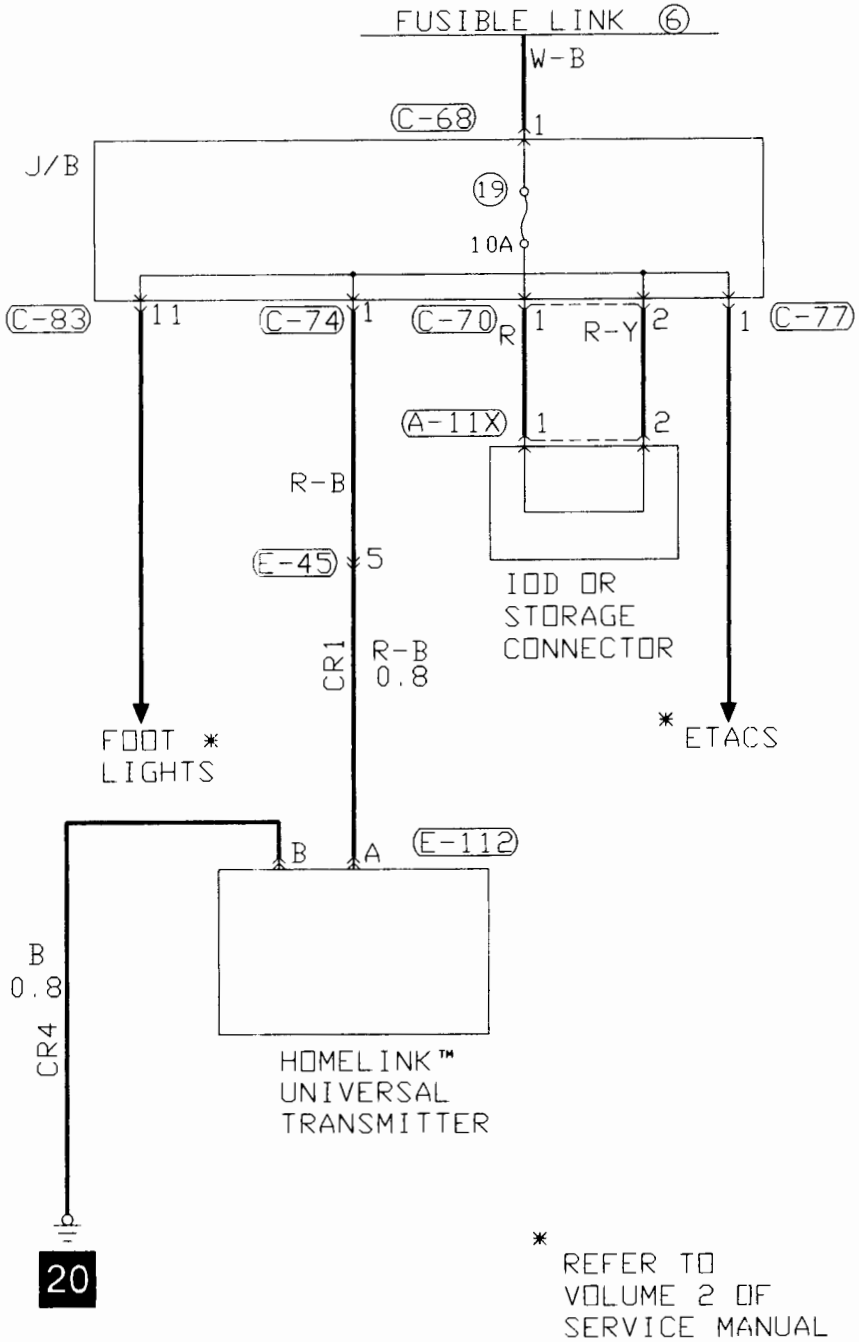

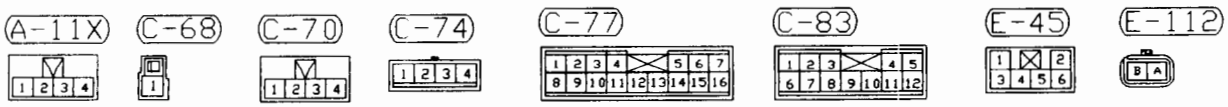

LIGHTED REARVIEW MIRROR (MAP LIGHTS) CIRCUIT DIAGRAM

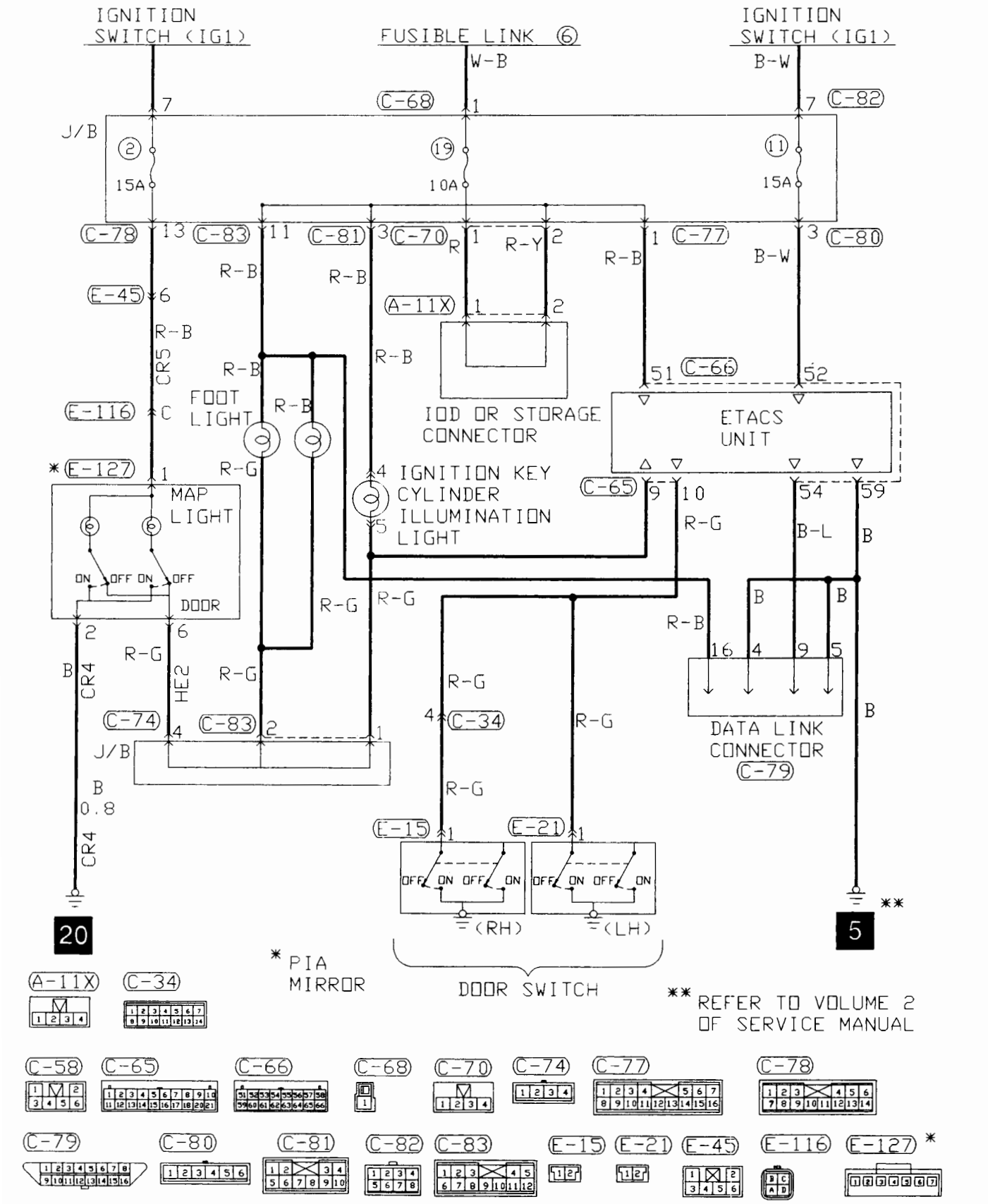

CARGO/HARDTOP STOWAGE AREA LAMP CIRCUIT DIAGRAM

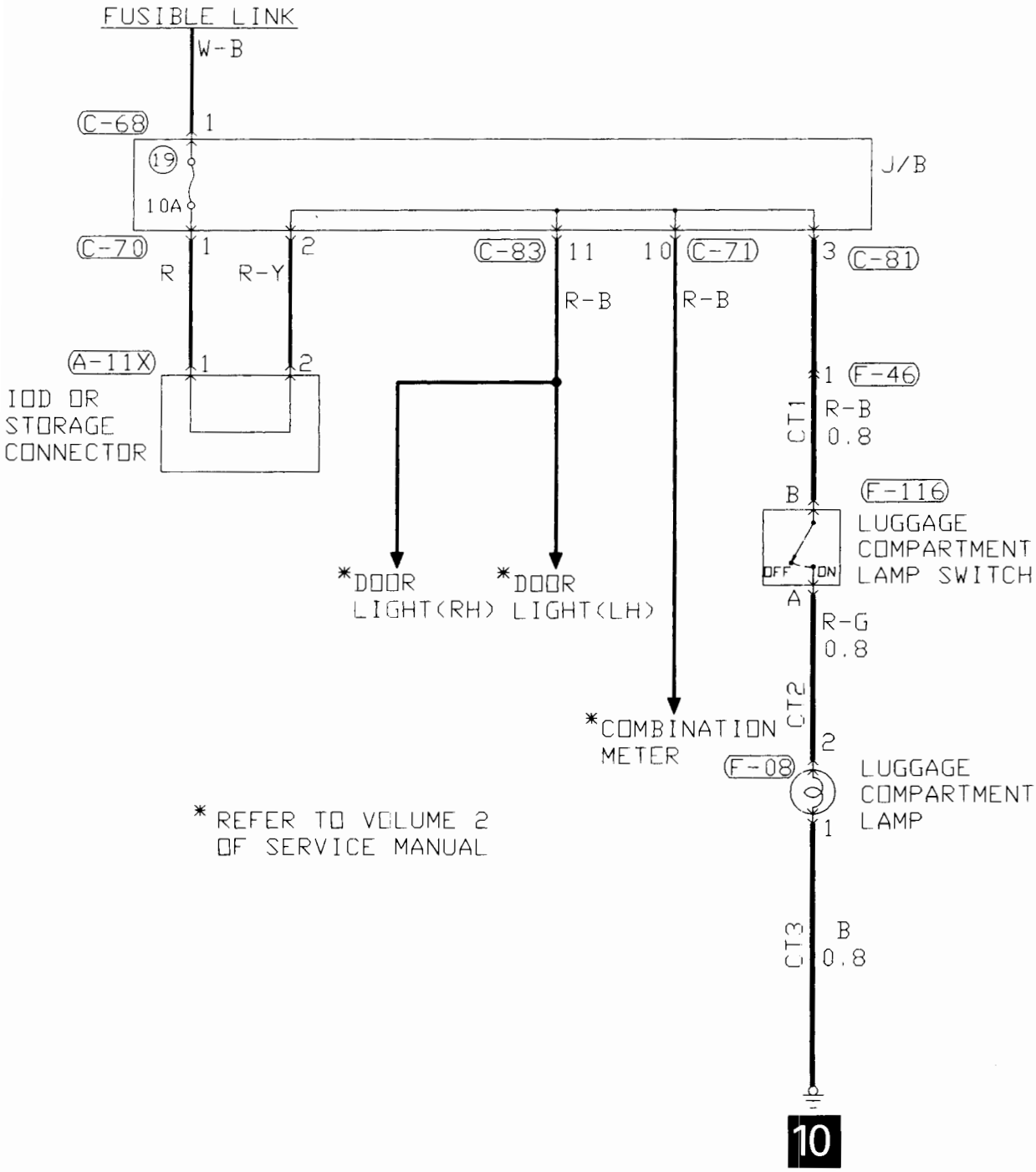

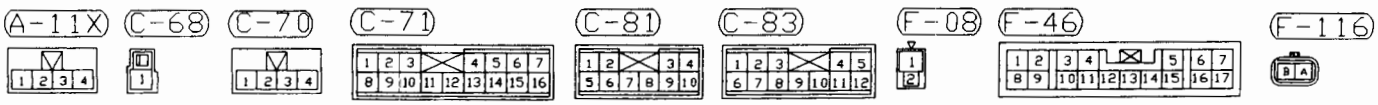

LIGHTED REARVIEW MIRROR (MAP LIGHTS)

REMOVAL AND INSTALLATION

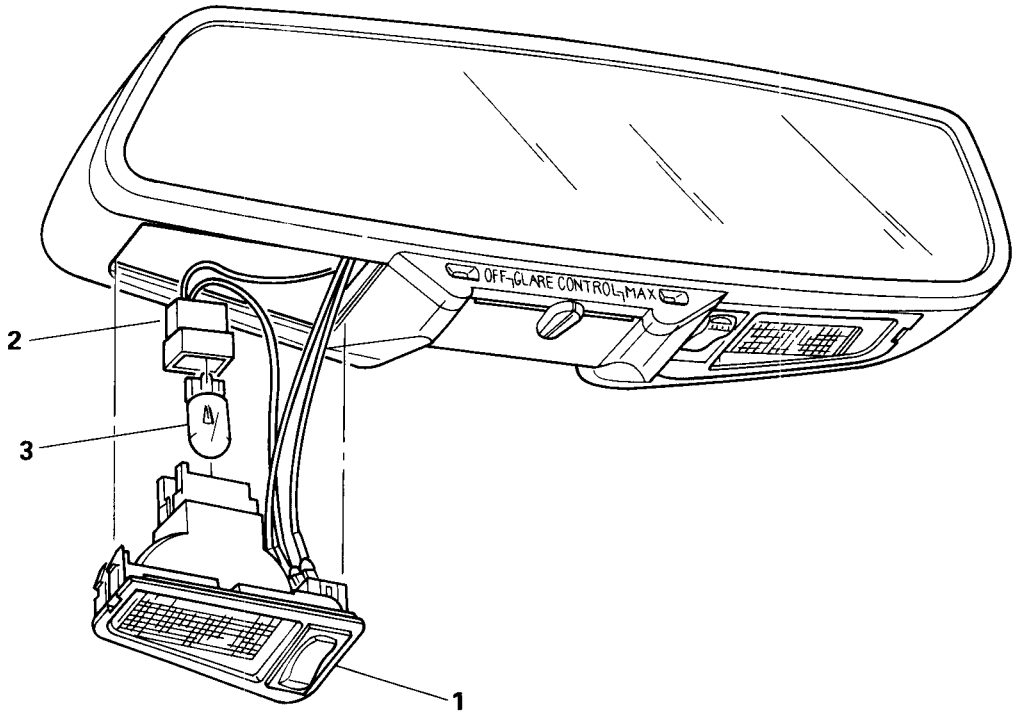

Removal steps

1. Bulb holder/switch assembly
2. Bulb socket
3. Bulb

CD CHANGER

REMOVAL AND INSTALLATION

Pre-removal and Post-installation Operation
- Removal and Installation of Trunk Center Front Panel and Hydraulic Line Cover (Refer to GROUP 52, in this Manual.)
- Removal and Installation of Hardtop ECU (Refer to GROUP 42, in this Manual.)
- Removal and Installation of LH Luggage Compartment Floor Box (Refer to GROUP 52, in this Manual.)

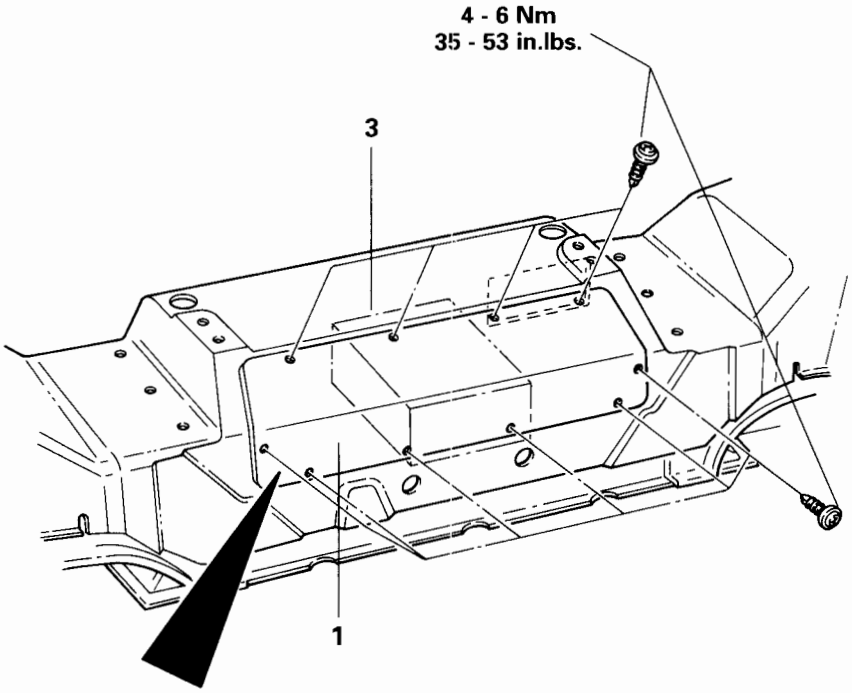

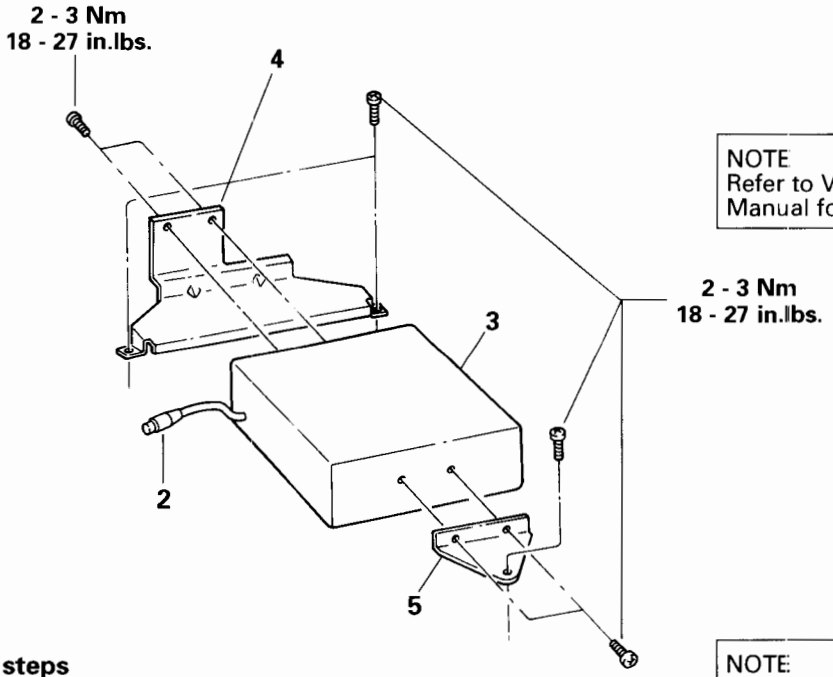

NOTE
Refer to Volume 2 of the Service Manual for more information.

NOTE
Front and rear CD changer brackets are Spyder-unique. Use only Spyder-unique service parts.

Removal steps

1. Cover
2. CD changer electrical connector
3. CD changer
4. CD changer bracket (front)
5. CD changer bracket (rear)

REAR SPEAKER

REMOVAL AND INSTALLATION

Pre-removal and Post-installation Operation
- Removal and Installation of Quarter Trim Panel (Refer to GROUP 52, in this Manual.)

NOTE
Refer to Volume 2 of the Service Manual for more information.

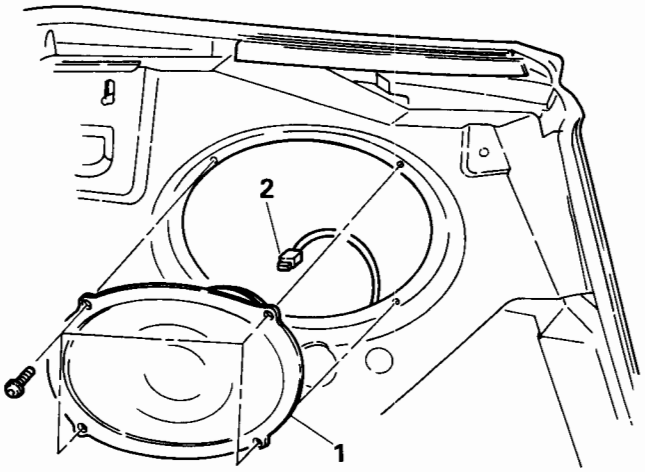

Removal steps

1. Speaker
2. Electrical connector

MOTOR ANTENNA AND RELAY

REMOVAL AND INSTALLATION

Pre-removal and Post-installation Operation of Motor Antenna
- Removal and Installation of Right Front Fender Front Splash Shield (Refer to GROUP 42 - Fender, in this Manual.)

Pre-removal and Post-installation Operation of Motor Antenna Relay
- Removal and Installation of Glove Box and Cross Pipe Cover (Refer to GROUP 52A, in Volume1.)

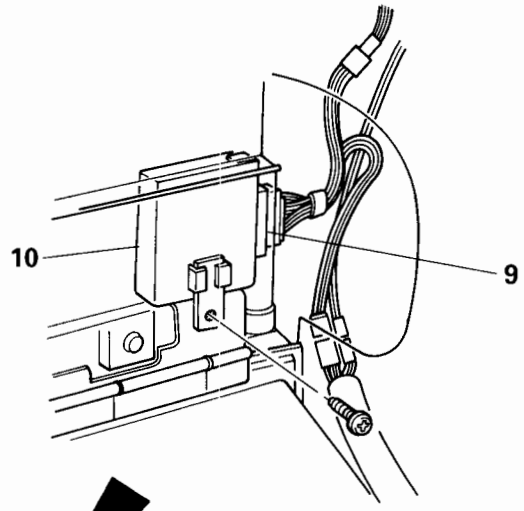

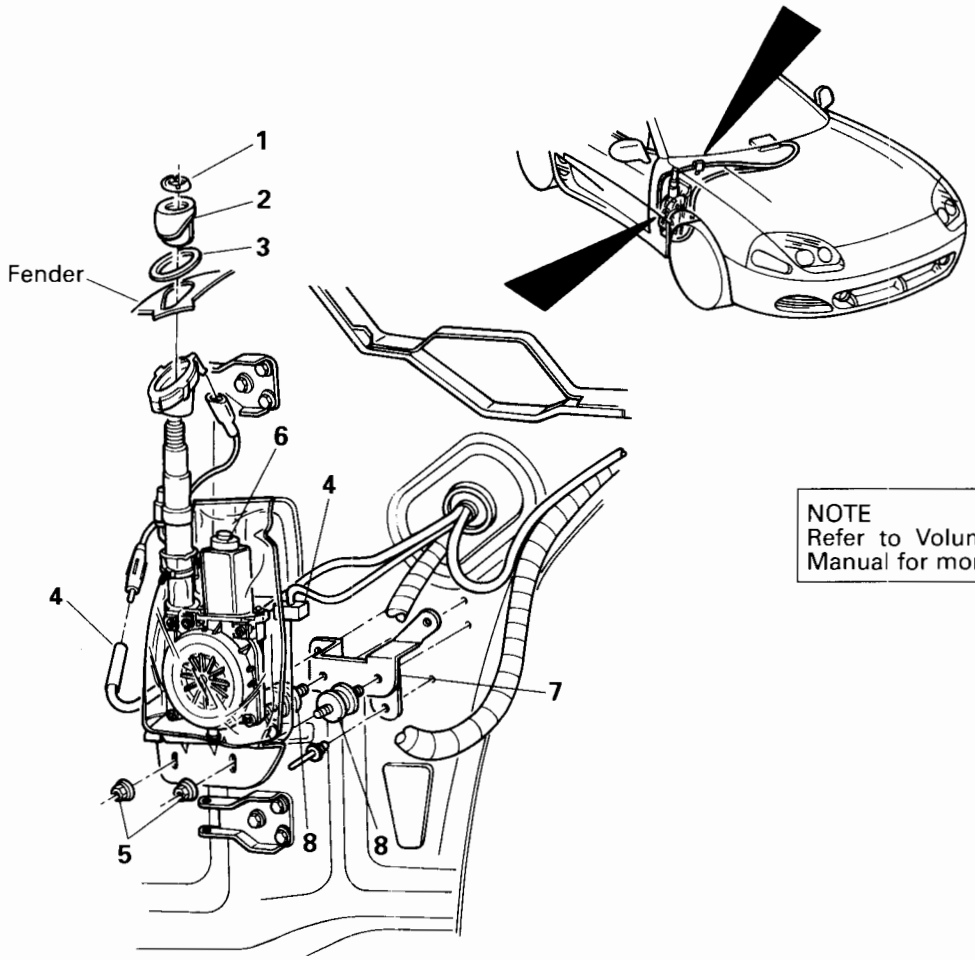

NOTE
Refer to Volume 2 of the Service Manual for more information.

Removal steps of motor antenna

1. Ring nut
2. Outer garnish
3. Gasket
4. Antenna feeder cable and motor antenna connections
5. Nuts
6. Motor antenna ◆◆
7. Antenna bracket
8. Isolator

Removal steps of motor antenna relay

9. Relay harness electrical connector
10. Relay

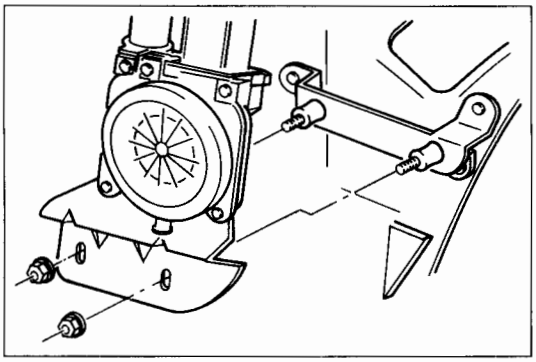

SERVICE POINT OF INSTALLATION

6. INSTALLATION OF MOTOR ANTENNA

(1) Install the motor antenna.

NOTE
Do not tighten the nuts holding the motor antenna to the bracket.

(2) Connect harness connectors and antenna feeder cable.
(3) Install the outer garnish and gasket, and the ring nut.
(4) Tighten the motor attaching nuts.

Standard value: 5.6 - 8 Nm (50 - 71 in.lb.)

(5) Check operation of antenna by operating the radio.

HomeLink™ UNIVERSAL TRANSMITTER

REMOVAL AND INSTALLATION

Pre-removal and Post-installation Operation
- Removal and Installation of Header Garnish (Refer to GROUP 52, in this Manual.)

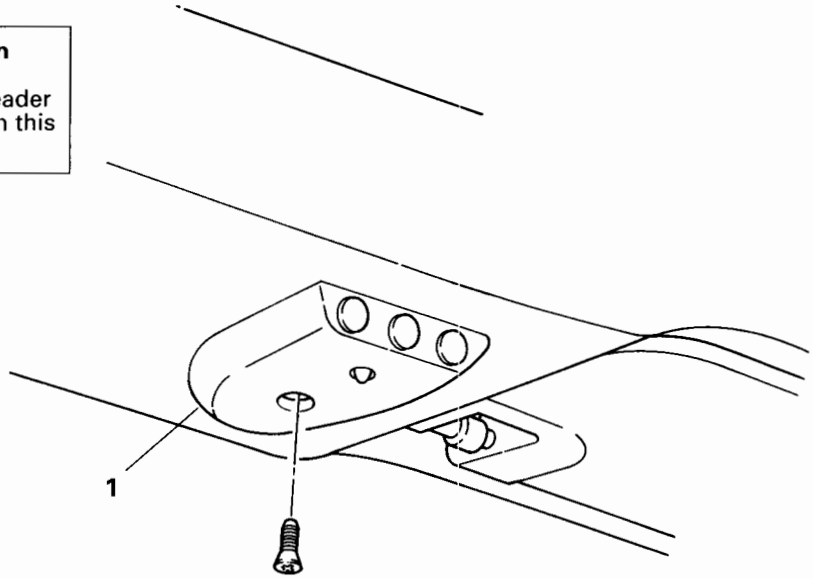

Removal step

1. HomeLink™ Universal Transmitter

INSPECTION

INSPECTION OF HomeLink™ UNIVERSAL TRANSMITTER

1. This unit cannot be inspected nor is any component inside serviceable. Refer to Diagnostics and Testing in this section; replace the unit if troubleshooting proves unsuccessful.

QUARTER TRIM PANEL COURTESY LIGHT

REMOVAL AND INSTALLATION

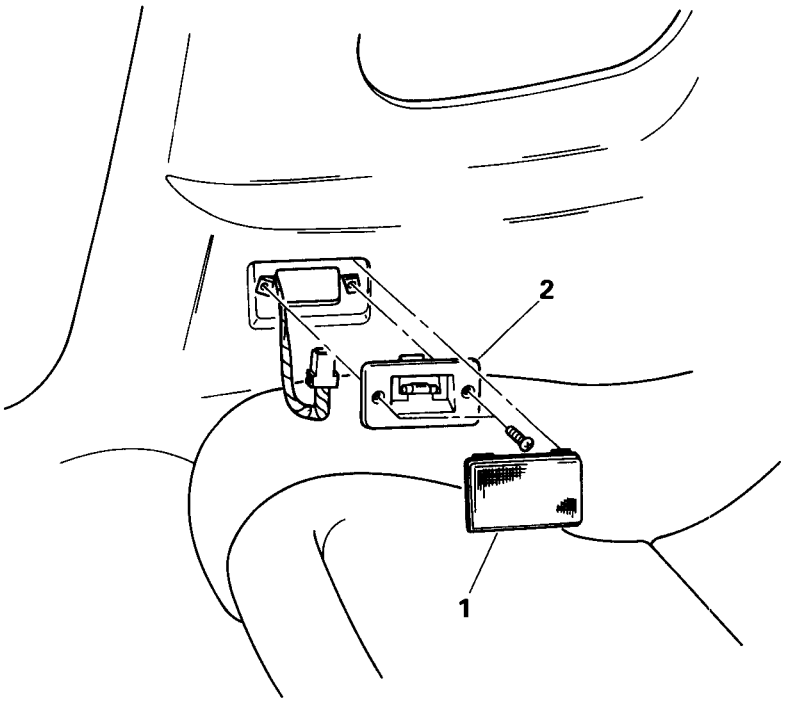

Removal steps

◆◆ 1. Lens
2. Bulb holder

SERVICE POINT OF REMOVAL

1. REMOVAL OF LENS

Use the tape-wrapped tip of a screwdriver to remove the lens.

THEFT ALARM SYSTEM - LIGHT AUTOMATIC SHUT-OFF AND KEYLESS ENTRY RECEIVER ASSEMBLY (SPYDER-UNIQUE RELOCATION)

REMOVAL AND INSTALLATION

Pre-removal and Post-installation Operation
- Removal and Installation of LH Quarter Trim Panel (Refer to GROUP 52, in this Manual.)

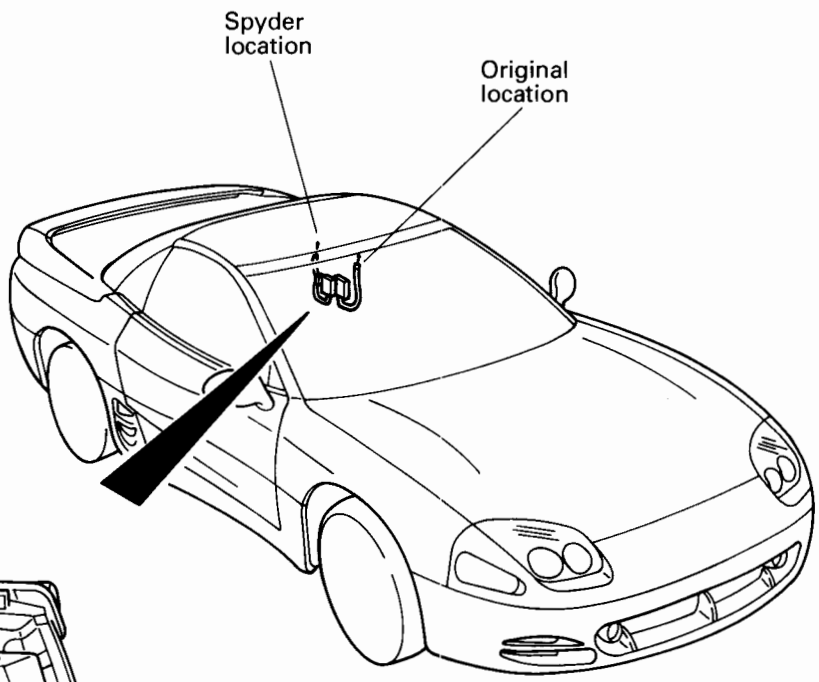

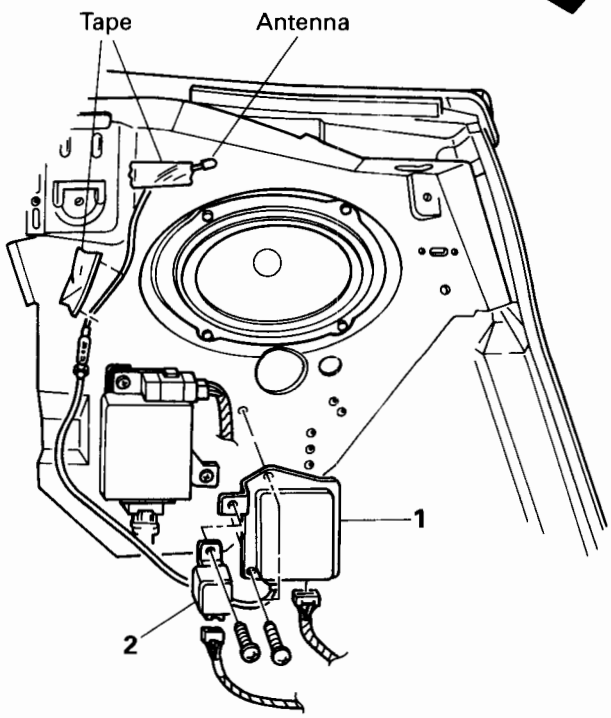

NOTE
Refer to Volume 2 of the Service Manual for more information.

Removal steps

◆◆ ◆◆ 1. Keyless entry receiver assembly
2. Light automatic shut-off unit

CARGO/HARDTOP STOWAGE AREA LIGHT

REMOVAL AND INSTALLATION

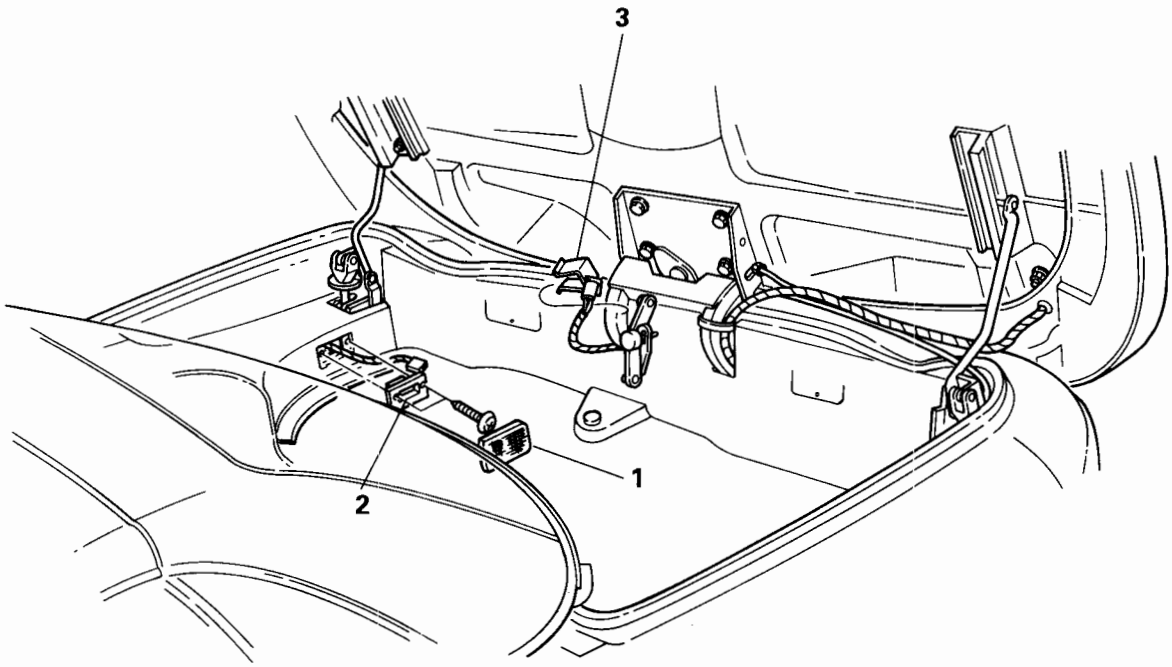

Removal steps

◆◆ 1. Lens
2. Bulb holder
◆◆ 3. Mercury switch

SERVICE POINT OF REMOVAL

1. REMOVAL OF LENS

Use the tape-wrapped tip of a screwdriver to remove the lens.

SERVICE POINT OF INSTALLATION

3. INSTALLATION OF MERCURY SWITCH

(1) Be sure the wires of the switch are facing down.
(2) Check the operation of the cargo area light system by opening and closing the hard tonneau.

REAR COMBINATION LIGHTS

REMOVAL, INSTALLATION AND MODIFICATION

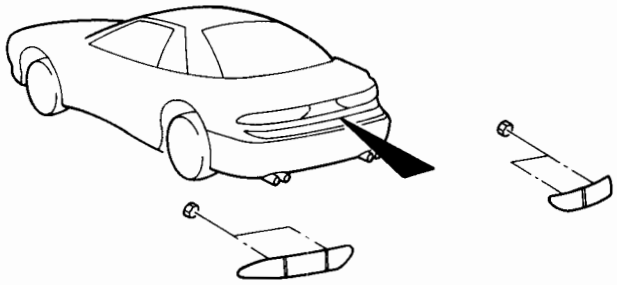

Pre-removal and Post-installation Operation
- Removal and Installation of Rear Trunk Trim (Refer to GROUP 52, in this Manual.)

Rear combination light removal

◆◆ ◆◆ 1. Rear combination light

NOTE
(1) Left and right 3000GT rear combination lights MUST be modified to accommodate the Spyder-unique body structure.
(2) Remove rubber vent tubes on the rear of the lights before trimming, then, reinstall.

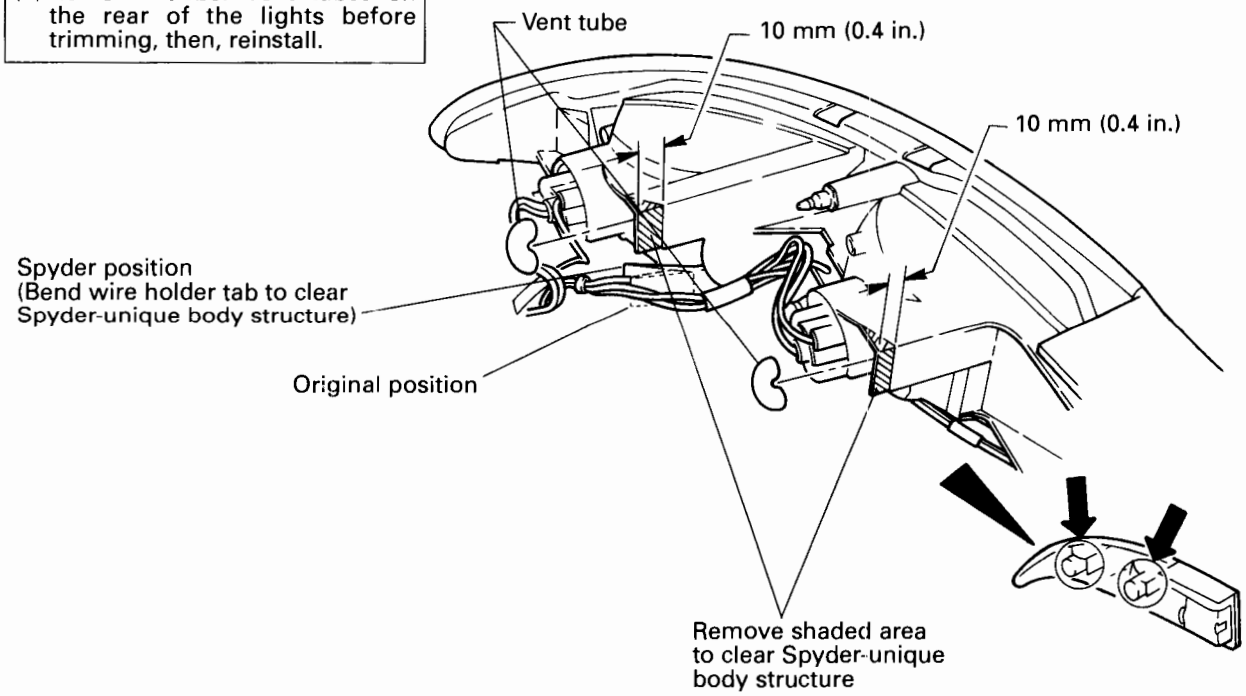

RIGHT REAR COMBINATION LIGHT SHOWN FROM REAR
(LEFT SIDE OPPOSITE)

SERVICE POINT OF REMOVAL

1. REMOVAL OF REAR COMBINATION LIGHT

(1) Open the hard tonneau.
(2) Remove the nuts securing the combination light.
(3) Close the hard tonneau.
(4) Using the tape-wrapped tip of a screwdriver, remove the light.

SERVICE POINT OF INSTALLATION

1. INSTALLATION OF REAR COMBINATION LIGHT

(1) Install the combination light.
(2) Open the hard tonneau.
(3) Install the nuts to secure the light.

HIGH MOUNTED STOP LIGHT

REMOVAL AND INSTALLATION

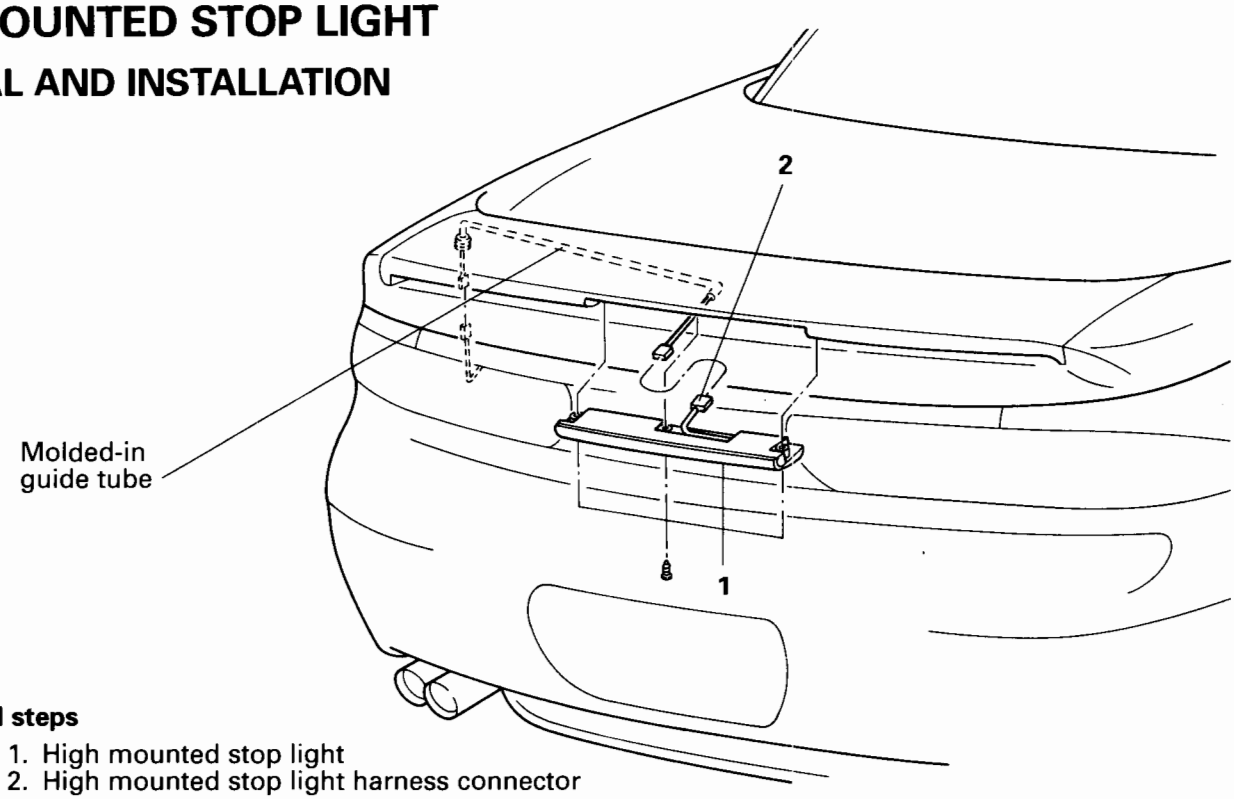

Removal steps

1. High mounted stop light
2. High mounted stop light harness connector

NOTES

HEATER, AIR CONDITIONING AND VENTILATION

CONTENTS

INTERIOR TEMPERATURE SENSOR (SPYDER-UNIQUE RELOCATION) **2**
Removal and installation 2

NOTE
When the hardtop is open, the in-car temperature sensor for the air conditioning is now reading the temperature inside the hardtop stowage area. Therefore, when using the A/C set the "MODE" to the desired selection and select the fan speed using "FAN". Set the temperature control ("TEMP") to a comfortable setting as required. The A/C system is not designed to cool the vehicle with the hardtop open.

INTERIOR TEMPERATURE SENSOR (SPYDER-UNIQUE RELOCATION)

REMOVAL AND INSTALLATION

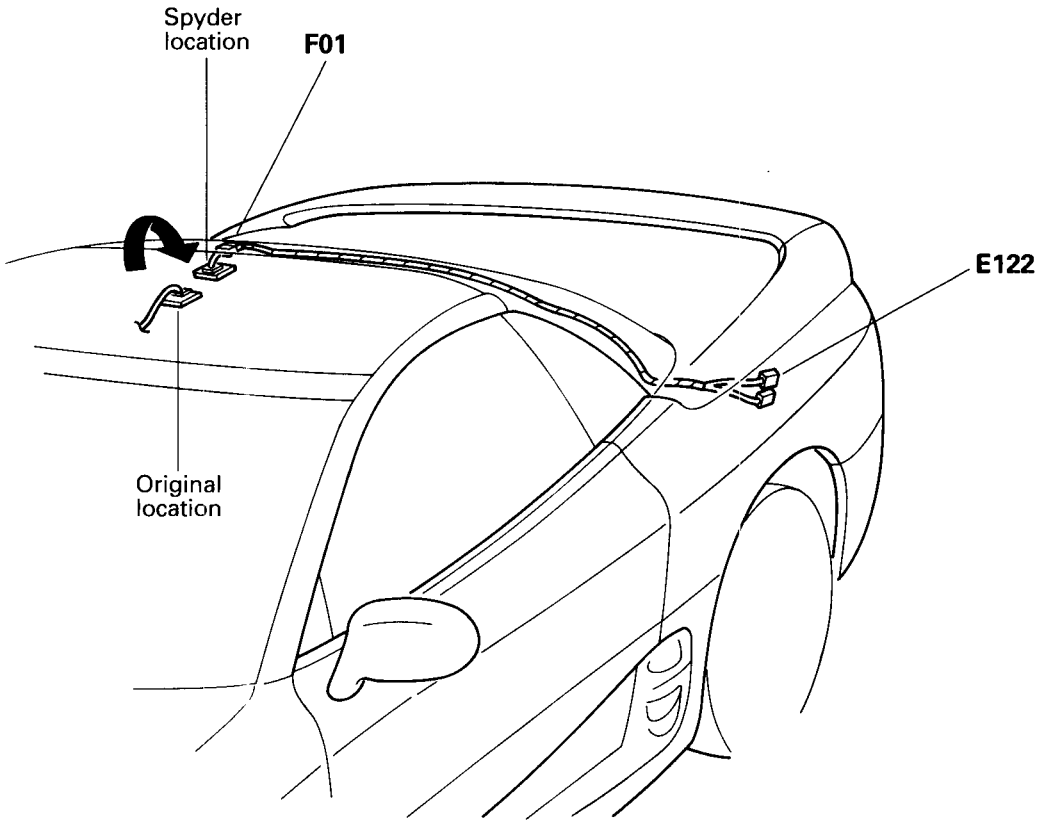

NOTE
Refer to GROUP 42, in this Manual for Configuration Diagram.
See Volume 1 for more information.

Removal step

◆◆ 1. Interior temperature sensor

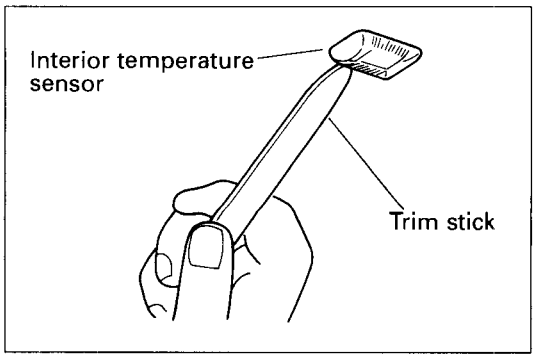

SERVICE POINT OF REMOVAL

1. REMOVAL OF INTERIOR TEMPERATURE SENSOR

Using a trim stick, remove the interior temperature sensor from the headlining.

TSB Revision

NOTE: THE LISTINGS IN THIS INDEX ARE FOR VOLUME 3, SERVICE MANUAL SUPPLEMENT, FOR SPYDER RELATED COMPONENTS AND/OR CHANGES. IF ADDITIONAL BASE CAR INFORMATION IS NEEDED, REFER TO VOLUME 1 AND 2 OF THE SERVICE MANUAL.

A

ABS CONTROL UNIT
- Spyder-unique Relocation 35-2

AERO PARTS
- Side Air Dam 51-5,8
- Tonneau Spoiler 51-2

B

BODY DIMENSIONS AND MEASUREMENT METHODS . 42-264

BODY STRUCTURE
- ASC Incorporated Installed Parts 42-267
- Mitsubishi Installed Parts 42-266

C

CARGO/HARDTOP STOWAGE AREA LIGHT 54-22

CARGO/HARDTOP STOWAGE AREA TRIM 52-15

CD CHANGER 54-15

CENTER CLOSEOUT PANEL 52-24

CHIME MODULE AND TURN-SIGNAL AND HAZARD FLASHER UNIT 42-260

D

DIAGNOSTICS AND TESTING (BODY) 42-15
- AUTO-CONFIGURATION 42-17
- CIRCUIT DIAGRAMS
  - Chime Module 42-144
  - Data Link Connector (DLC) 42-148
  - Driver Door Power Window System 42-138
  - Hard Tonneau Latch System 42-137
  - Hardtop and Hard Tonneau Control Switch 42-142
  - Hardtop and Hard Tonneau Drive Motors 42-147
  - Header Latch System 42-136
  - LEDs 42-145
  - Object-in-trunk Sensor 42-143
  - Passenger Door Power Window System 42-140
  - Potentiometers 42-146
  - Power Quarter Window 42-135
  - Retractable Hardtop Power Distribution and Control . 42-133
- CONFIGURATION DIAGRAMS
  - Interior 42-24
  - Luggage Compartment 42-26
  - Overall 42-23
- DIAGNOSTIC TROUBLE CODE (DTC) IDENTIFICATION LIST 42-47
- ECU CONNECTOR LOCATION AND TERMINAL DISENGAGEMENT 42-19-21
- GROUNDING LOCATIONS 42-18
- INSPECTION AND VERIFICATION 42-32
- NOTES AND TERMS 42-16,17
- PINPOINT TESTS
  - No DTCs Present 42-49
  - With DTCs Present 42-75
- RECOMMENDED WIRE REPAIR 42-22
- RETRACTABLE HARDTOP OPERATION 42-29
- SYMPTOM CHART
  - No DTCs Present 42-33
  - With DTCs Present 42-35
- TROUBLE SHOOTING HINTS
  - No DTCs Present 42-41
  - With DTCs Present 42-43
- WARNINGS AND CAUTIONS 42-15
- WIRE COLOR CODES 42-28

DIAGNOSTICS AND TESTING (CHASSIS ELECTRICAL) 54-5
- Circuit Diagrams
  - Cargo/Hardtop Stowage Area Lamp 54-13
  - HomeLink™ Universal Transmitter 54-11
  - Lighted Rearview Mirror (Map Lights) 54-12
- Inspection and Verification 54-5
- Pinpoint Tests 54-7
  - Test A: Both Map Light Inoperative With Switches 54-7
  - Test B: Map Light (One) Inoperative 54-8
  - Test C: Luggage Compartment Lamp Inoperative 54-9
  - Test D: Universal Transmitter (HomeLink™) Inoperative . 54-10
- Symptom Chart 54-6
- Troubleshooting Hints 54-6

DIAGNOSTICS AND TESTING (INTERIOR) 52-2
- Circuit Diagrams (Self-dimming Mirror) 52-5
- Inspection and Verification 52-2
- Pinpoint Tests 52-4
- Symptom Chart 52-3
- Troubleshooting Hints 52-3

DOOR LOCATION PIN AND RECEIVER 42-240

DOOR WINDOW RELAYS 42-239

E

ECS CONTROL UNIT
- Spyder-unique Relocation 33B-2

ELECTRONIC CONTROL UNIT (ECU), HARDTOP 42-263

F

FENDER 42-219

FRONT PILLAR TRIM 52-10

FRONT SEAT BELT GUIDE 52-20

FRONT SEATS 52-18
- Recline-angle Stop 52-18

G

GENERAL DATA AND SPECIFICATIONS 00-28
- General Specifications 00-28

GENERAL INFORMATION ABOUT THE RETRACTABLE HARDTOP SYSTEM 00-7
- Battery, Low or Discharged 00-9
- Battery, Over-charge 00-9
- Cold Weather Driving 00-8
- Object-in-trunk Sensor 00-8
- Power Quarter Windows and Door Windows 00-8

GENERAL INFORMATION, (BODY) 42-3
- Description
  - About the Automatic Header Latch System 42-3
  - About the Hard Tonneau 42-3
  - About the Hardtop and Power Quarter Windows 42-3
  - About the Object-in-trunk Sensor 42-4
  - General Precautions 42-4
  - Overview 42-3

GENERAL INFORMATION, (CHASSIS ELECTRICAL) 54-2

Cargo/Hardtop Stowage Area Lamp System. 54-4
CD Changer 54-2
Motor Antenna 54-3
GENERAL INFORMATION ON MANUAL OPERATION OF THE RETRACTABLE HARDTOP SYSTEM 00-16

H

HARD TONNEAU 00-10
Normal Operation - Hard Tonneau 00-10
HARD TONNEAU HYDRAULIC SYSTEM PUMP/MOTOR . 42-193
HARD TONNEAU HYDRAULIC SYSTEM PUMP/MOTOR AND CYLINDERS 42-190
HARD TONNEAU LATCH SYSTEM 42-188
HARD TONNEAU MECHANISM 42-186
HARD TONNEAU POSITION SENSOR (POTENTIOMETER) . 42-195
HARD TONNEAU SEQUENCE OF OPERATION - CLOSING . 42-8
HARD TONNEAU SEQUENCE OF OPERATION - OPENING 42-7
HARDTOP AND HARD TONNEAU CONTROL SWITCH . . 42-257
HARDTOP ELECTRONIC CONTROL UNIT (ECU) 42-263
HARDTOP SYSTEM 42-200
HEADER GARNISH 52-10
HEADLINING 52-21
HIGH MOUNTED STOP LIGHTS 54-25
HOMELINK™ UNIVERSAL TRANSMITTER 54-19
HOMELINK™ UNIVERSAL TRANSMITTER (GENERAL) . . 00-22
List of Tested Garage Door Openers 00-25
Proper Training Technique 00-22
Training Problem Diagnosis 00-23
Transmitter Compatibility 00-23
HYDRAULIC SYSTEM, HARD TONNEAU AND HARDTOP 42-214
HYDRAULIC SYSTEM BLEEDING
Acceptable Levels of Trapped Air Bubbles 42-215
Hard Tonneau System Bleeding 42-216
Hardtop System Bleeding 42-216
Pre-bleeding Notes 42-215
HYDRAULIC SYSTEM DIAGRAMS 42-214

I

INTERIOR TEMPERATURE SENSOR (SPYDER-UNIQUE RELOCATION) 55-2
INTRODUCTION (General) 00-2

L

LIGHTED REAR VIEW MIRROR (MAP LIGHTS) 54-14
LUBRICATION AND MAINTENANCE
Hydraulic System Fluid, Hard Tonneau and Hardtop . . . 00-29
Lubricants - Greases 00-29
Maintenance Schedules 00-29
Severe Service 00-29

M

MANUAL OPERATION - HARD TONNEAU 00-16
Closing the Hard Tonneau 00-17
Opening Hard Tonneau 00-16
MANUAL OPERATION - RETRACTABLE HARDTOP 00-17
Closing Retractable Hardtop 00-17
Opening Retractable Hardtop 00-19
MANUAL OPERATION - HEADER LATCHES 00-21
To Open or Close Header Latches 00-21
MOTOR ANTENNA AND RELAY 54-17
MOULDINGS
Drip Moulding 51-9
Quarter Belt Moulding 51-9,10

O

OBJECT-IN-TRUNK SENSOR 42-261

P

POLISHING THE RETRACTABLE HARDTOP AND HARD TONNEAU 00-22
PRECAUTIONS BEFORE SERVICE 00-27
Servicing the Electrical System 00-27
Vehicle Washing 00-27
PROTECTION, THEFT 00-6

Q

QUARTER TRIM PANEL 52-13
QUARTER TRIM PANEL COURTESY LIGHT 54-20
QUARTER WINDOW SYSTEM 42-233
Drive Cable 42-235
Position Sensor 42-237
Window 42-233
QUICK TROUBLESHOOTING GUIDE FOR THE HARDTOP AND HARD TONNEAU 00-14
QUICK TROUBLESHOOTING GUIDE FOR THE HARD TONNEAU 00-11

R

REAR BUMPER 51-11
Rear Bumper Extension 51-11
REAR COMBINATION LIGHTS 54-23
REAR LOCK COVER 51-2,5
REAR SEAT 52-12
REAR SEAT, STRIKER AND REAR SHELF PANEL 52-22
REAR SPEAKER 54-16
RECOMMENDED LUBRICANTS AND LUBRICANT CAPACITIES TABLE 00-30
Lubricant Capacities Table 00-30
Recommended Lubricants 00-30
RETRACTABLE HARDTOP 00-13
Air Conditioning - When Hardtop is Open 00-12
Normal Operation - Closing Retractable Hardtop 00-12
Normal Operation - Opening Retractable Hardtop 00-12
RETRACTABLE HARDTOP ASSEMBLY 42-200
RETRACTABLE HARDTOP, FRONT ROOF PANEL 42-197
RETRACTABLE HARDTOP HYDRAULIC SYSTEM PUMP/MOTOR 42-213
RETRACTABLE HARDTOP HYDRAULIC SYSTEM PUMP/MOTOR AND CYLINDERS 42-209
RETRACTABLE HARDTOP POSITION SENSOR (POTENTIOMETER) 42-207
RETRACTABLE HARDTOP SEQUENCE OF OPERATION CLOSING 42-6
RETRACTABLE HARDTOP SEQUENCE OF OPERATION - OPENING 42-5
ROOF GLASS 42-224
General
Glass Wipe, Primers, Adhesive and Glass Installation Items 42-221
Replacement of Moulding (Bonding Type) 42-222
ROOFTOP CARRIER AND LUGGAGE RACK 00-13

S

SEAT BELT 52-27
SEALANT AND ADHESIVES
Rear Roof Glass. 42-10
Weatherstrips 42-10
SELF-DIMMING LIGHTED REAR VIEW MIRROR 52-11
Black-out Applique 52-11
Mirror Garnish 52-11
Mounting Button 52-11
SENSOR, INTERIOR TEMPERATURE (Auto A/C)
Spyder-unique Relocation 55-2
SERVICE ADJUSTMENT PROCEDURES (BODY) 42-149
Door Locating Pin 42-181
Front Rail Weatherstrip and Holder 42-170
Hard Tonneau 42-171
Tonneau Flipper Doors. 42-179
Tonneau Hinge 42-171
Tonneau Latches. 42-171
Tonneau Manual Release System 42-178
Hard Tonneau Position Sensor (Potentiometer) 42-182
Power Quarter Window 42-162
Quarter Window. 42-164
Quarter Window Cables, Synchronization of 42-163
Quarter Window Guiding System (Rudder) 42-166
Quarter Window Position Sensors 42-168
Retractable Hardtop Assembly. 42-149
Retractable Hardtop Downstop 42-158
Downstop Height Adjustment 42-158
Downstop Lock Adjustment. 42-159
Retractable Hardtop Position Sensor (Potentiometer) . . 42-182
Retractable Hardtop System, Adjustment of. 42-151
Adjustment Points 42-157
Gap Between Front and Rear Roof Panels 42-153
Hardtop Flushness to Windshield Header. 42-152
Hardtop Locator Pins 42-151
Hardtop Roof Crown 42-154
Hardtop Roof Lock-up Before Closing. 42-152
Hardtop Upstops 42-151
Header Latch Garnishes. 42-151
Weatherstrips, All Hardtop Related 42-151
Windshield Header Power Latch System. 42-160
Latch Actuator Adjustment 42-160
Latch Height Adjustment 42-161
SERVICE ADJUSTMENT PROCEDURES (INTERIOR) 52-7
Center Closeout Panel 52-8
Quarter Trim 52-9
Rear Seat Strikers 52-9
Rear Shelf Panel 52-8
SPARE TIRE, JACK AND TOOL SET STORAGE 00-22
SPECIAL TOOLS (BODY) 42-12
SPECIFICATIONS (BODY) 42-9
General 42-8
Sealants and Adhesives 42-10
SPYDER CLEANING RECOMMENDATIONS 00-21
Exterior 00-21
About the Spyder Finish 00-21
Washing 00-22
Waxing 00-22
Interior 00-21
Hard Tonneau Pad 00-21
Headlining 00-21
SPYDER DECAL 51-12,13

T

THEFT-ALARM SYSTEM 00-13
THEFT ALARM SYSTEM, LIGHT AUTOMATIC SHUT-OFF AND KEYLESS ENTRY RECEIVER ASSEMBLE (SPYDER-UNIQUE RELOCATION) 54-21
THEFT PROTECTION 00-6

V

VEHICLE IDENTIFICATION 00-5
Vehicle Identification Code Chart Plate 00-5
Vehicle Identification Number Location 00-5

W

WEATHERSTRIPS 42-242
A-pillar Weatherstrip Holder 42-242
Front Rail 42-248
Front Rail Weatherstrip Holder 42-248
Hard Tonneau 42-246
Hardtop 42-250
Hardtop Weatherstrip Holder 42-250
Quarter Window Sash Seal 42-244
Rear Rail Inner 42-252
Windshield Header 42-242
Windshield Header Weatherstrip Holder 42-242
WINDSHIELD HEADER POWER LATCH SYSTEM 42-254

Quick Reference Chart - Hatchback-To-Convertible Connector Changes

ENGINE COMPARTMENT WIRING HARNESS
(Connector symbol A)

FOR MORE INFORMATION SEE THE APPROPRIATE CIRCUIT DIAGRAM IN VOLUME 1, 2, OR 3.

Vehicle system (Component)	Hatchback connector	Pin #	Convertible connector	Pin #	Comments
Convertible system	A-08X	not used	A-08X	-	60A Fusible link used for convertible

INSTRUMENT PANEL AND FLOOR CONSOLE WIRING HARNESS
(Connector symbol D)

FOR MORE INFORMATION SEE THE APPROPRIATE CIRCUIT DIAGRAM IN VOLUME 1, 2, OR 3.

Vehicle system (Component)	Hatchback connector	Pin #	Convertible connector	Pin #	Comments
Active aero switch	D-29	--	Not used	--	not used in convertible
Active exhaust switch	D-38	--	Not used	--	not used in convertible
Telephone cable	D-46	--	Not used	--	not used in convertible

INTERIOR WIRING HARNESS
(Connector symbol E)

FOR MORE INFORMATION SEE THE APPROPRIATE CIRCUIT DIAGRAM IN VOLUME 1, 2, OR 3.

Vehicle system (Component)	Hatchback connector	Pin #	Convertible connector	Pin #	Comments
Vanity mirror illumination (LH)	E-02	--	Not used	--	not used in convertible
Vanity mirror illumination (RH)	E-03	--	Not used	--	not used in convertible
Dome light	E-05	--	E-112	--	
Rear intermittent wiper relay	E-18	--	Not used	--	not used in convertible

REAR WIRE HARNESS
(Connector symbol F)

FOR MORE INFORMATION SEE THE APPROPRIATE CIRCUIT DIAGRAM IN VOLUME 1, 2, OR 3.

Vehicle system (Component)	Hatchback connector	Pin #	Convertible connector	Pin #	Comments
Defogger (+)	F-02	1	E-120	1	
Rear wiper motor	F-03	--	Not used	--	not used in convertible
Defogger (-)	F-05	1	E-118	1	
ABS resistor	F-09	--	Not used	--	Note: connector in MMC body harness
ESC control unit	F-12 / F-13	--	Not used	--	Note: connectors in MMC body harness
Body wiring harness (LH) to body wiring harness (RH)	F-19 / F-20	--	Not used	--	not used in convertible

Quick Reference Chart - Hatchback-To-Convertible Connector Changes

REAR WIRE HARNESS (Continued)
(Connector symbol F)

FOR MORE INFORMATION SEE THE APPROPRIATE CIRCUIT DIAGRAM IN VOLUME 1, 2, OR 3.

Vehicle system (Component)	Hatchback connector	Pin #	Convertible connector	Pin #	Comments
Luggage compartment lamp switch	F-22	1	F-116	B A	
Liftgate cylinder lock switch	F-23	--	--	--	not used in convertible
Liftgate switch	F-24	--	--	--	not used in convertible
Active exhaust control unit	F-26	--	--	--	not used in convertible
Active aero control unit	F-27 / F-28	--	--	--	not used in convertible
Active exhaust actuator assembly	F-29	--	--	--	not used in convertible
Motor antenna control unit	F-31	--	A-79	--	same connector relocated to front of vehicle
Body wiring harness (LH) and liftgate wiring harness	F-34	1 5	E-122	E A	
Body wiring harness (LH) and liftgate wiring harness	F-35	--	--	--	not used in convertible
Telephone	F-36 / F-37 F-38 / F-39	--	--	--	not used in convertible