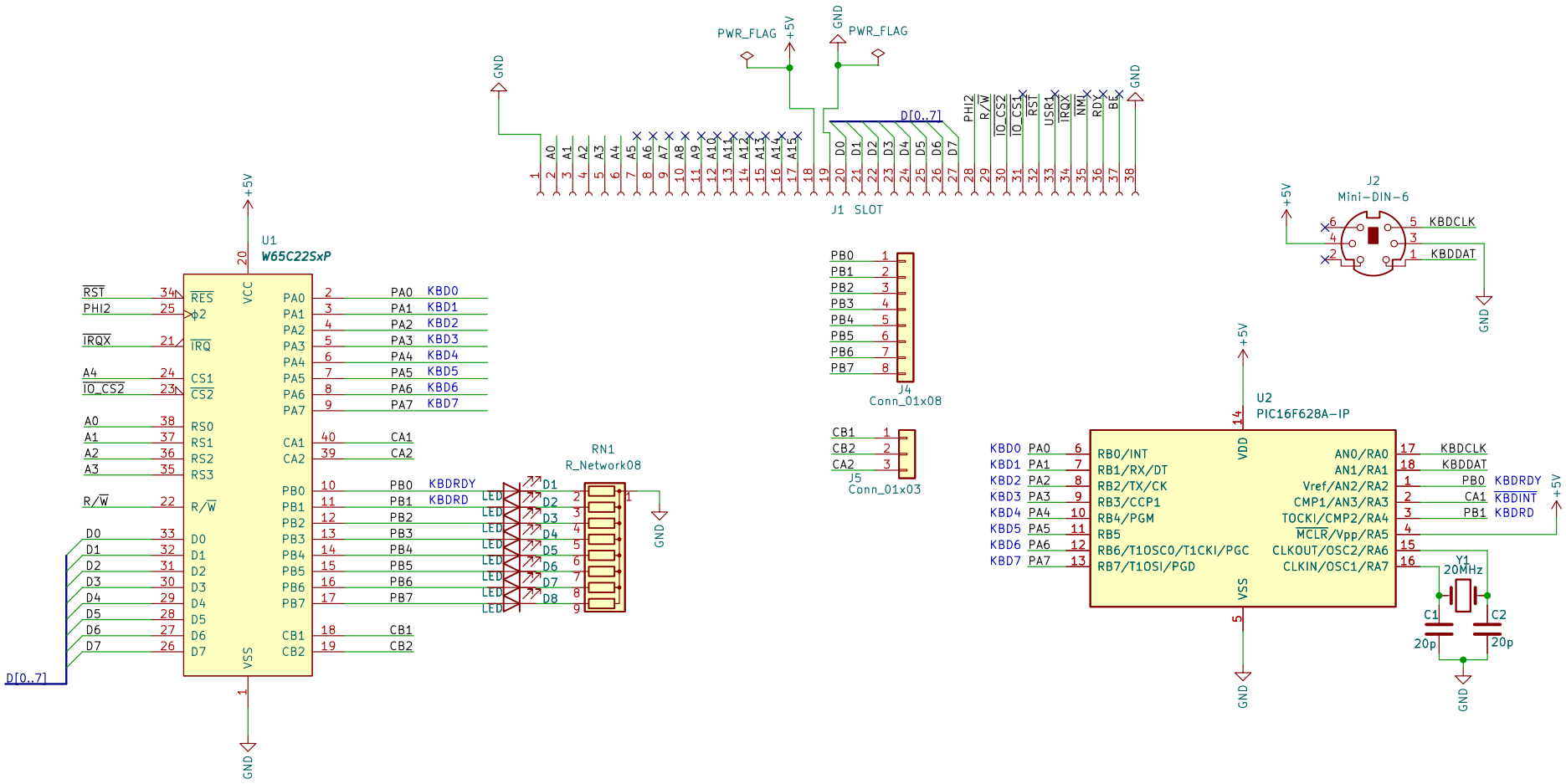

PS/2 Keyboard Interface and GPIO

David Latham

Sheet: /

File: 6502-retro-io.kicad_sch

Title: 6502-Retro IO Card

Size: A4	Date: 2023-07-18	**Rev: 2.0**
KiCad E.D.A. kicad (6.0.11)		Id: 1/1