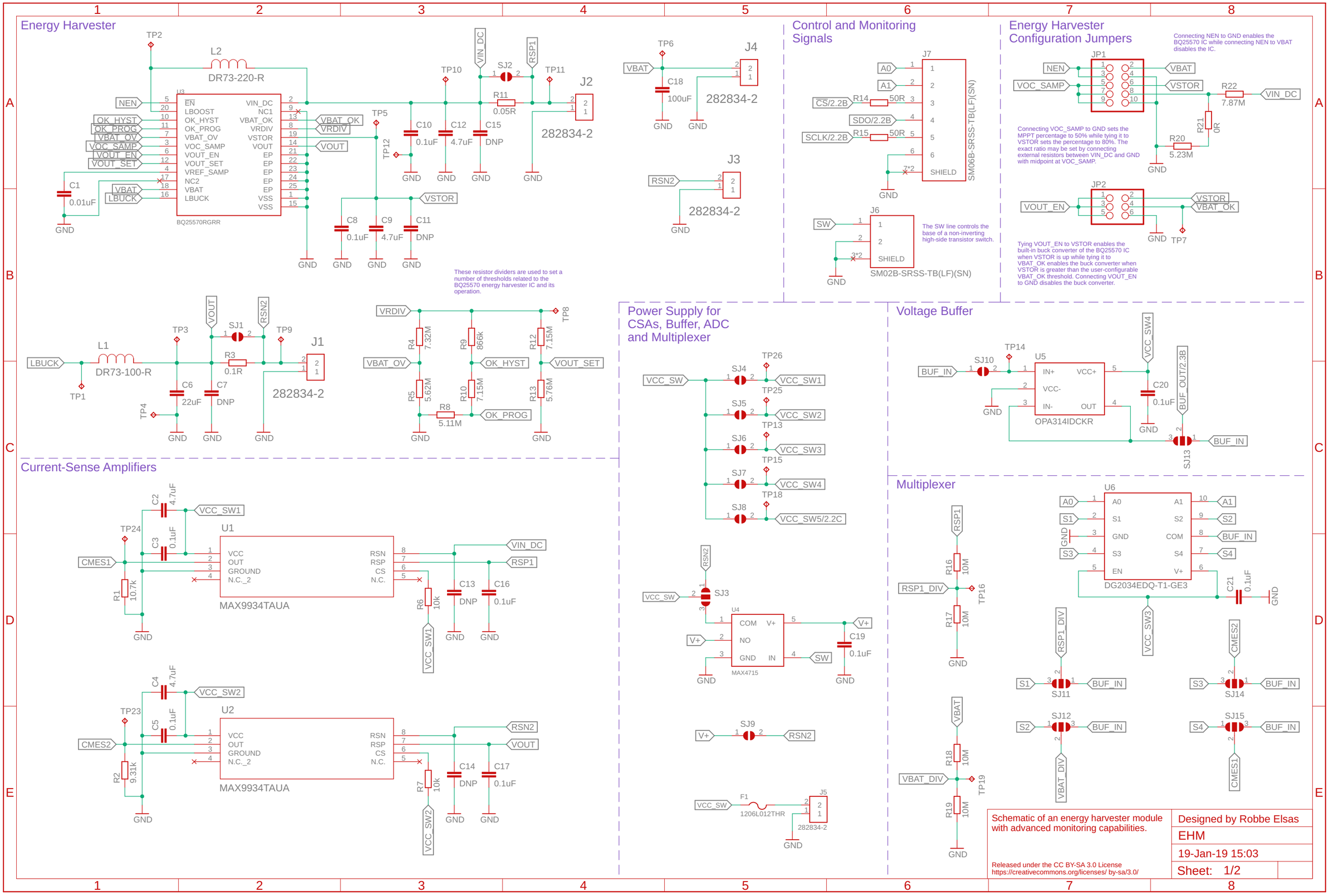
Energy Harvester
L2
DR73-220-R
U3
BQ25570RGRR
EN
LBOOST
OK_HYST
OK_PROG
VBAT_OV
VOC_SAMP
VOUT_EN
VOUT_SET
VREF_SAMP
NC2
VBAT
LBUCK
VIN_DC
NC1
VBAT_OK
VRDIV
VSTOR
VOUT
EP
VSS
NEN
C1
0.01uF
SJ2
RSP1
R11
0.05R
J2
282834-2
C10
0.1uF
C12
4.7uF
C15
DNP
C8
0.1uF
C9
4.7uF
C11
DNP
TP2
TP5
TP10
TP11
TP12
GND
Control and Monitoring Signals
J7
SM06B-SRSS-TB(LF)(SN)
A0
A1
CS/2.2B
SDO/2.2B
SCLK/2.2B
R14
R15
50R
SHIELD
J6
SW
SM02B-SRSS-TB(LF)(SN)
The SW line controls the base of a non-inverting high-side transistor switch.
Energy Harvester Configuration Jumpers
Connecting NEN to GND enables the BQ25570 IC while connecting NEN to VBAT disables the IC.
JP1
NEN
VOC_SAMP
VBAT
VSTOR
R22
7.87M
VIN_DC
R21
0R
R20
5.23M
Connecting VOC_SAMP to GND sets the MPPT percentage to 50% while tying it to VSTOR sets the percentage to 80%. The exact ratio may be set by connecting external resistors between VIN_DC and GND with midpoint at VOC_SAMP.
JP2
VOUT_EN
VBAT_OK
TP7
Tying VOUT_EN to VSTOR enables the built-in buck converter of the BQ25570 IC when VSTOR is up while tying it to VBAT_OK enables the buck converter when VSTOR is greater than the user-configurable VBAT_OK threshold. Connecting VOUT_EN to GND disables the buck converter.
TP6
J4
C18
100uF
282834-2
J3
RSN2
282834-2
L1
DR73-100-R
LBUCK
TP1
TP3
TP4
TP9
SJ1
R3
0.1R
C6
22uF
C7
DNP
J1
282834-2
These resistor dividers are used to set a number of thresholds related to the BQ25570 energy harvester IC and its operation.
VRDIV
TP8
VBAT_OV
OK_HYST
VOUT_SET
OK_PROG
R4
7.32M
R9
866k
R12
7.15M
R5
5.62M
R8
5.11M
R10
7.15M
R13
5.76M
Power Supply for CSAs, Buffer, ADC and Multiplexer
VCC_SW
SJ4
TP26
VCC_SW1
SJ5
TP25
VCC_SW2
SJ6
TP13
VCC_SW3
SJ7
TP15
VCC_SW4
SJ8
TP18
VCC_SW5/2.2C
SJ3
U4
MAX4715
COM
NO
GND
IN
V+
SW
C19
0.1uF
SJ9
F1
1206L012THR
J5
282834-2
Voltage Buffer
TP14
SJ10
BUF_IN
U5
OPA314IDCKR
IN+
VCC+
VCC-
IN-
OUT
VCC_SW4
C20
0.1uF
BUF_OUT/2.3B
SJ13
Multiplexer
U6
DG2034EDQ-T1-GE3
A0
S1
GND
S3
EN
A1
S2
COM
S4
V+
BUF_IN
C21
0.1uF
RSP1
R16
10M
RSP1_DIV
TP16
R17
10M
VBAT
R18
10M
VBAT_DIV
TP19
R19
10M
VCC_SW3
RSP1_DIV
CMES2
SJ11
SJ12
SJ14
SJ15
VBAT_DIV
CMES1
Current-Sense Amplifiers
U1
MAX9934TAUA
VCC
OUT
GROUND
N.C._2
RSN
RSP
CS
N.C.
C2
4.7uF
C3
0.1uF
TP24
CMES1
R1
10.7k
VCC_SW1
VIN_DC
RSP1
R6
10k
C13
DNP
C16
0.1uF
U2
MAX9934TAUA
C4
4.7uF
C5
0.1uF
TP23
CMES2
R2
9.31k
VCC_SW2
RSN2
VOUT
R7
10k
C14
DNP
C17
0.1uF
Schematic of an energy harvester module with advanced monitoring capabilities.
Released under the CC BY-SA 3.0 License
https://creativecommons.org/licenses/ by-sa/3.0/
Designed by Robbe Elsas
EHM
19-Jan-19 15:03
Sheet: 1/2

Analog to Digital Converter

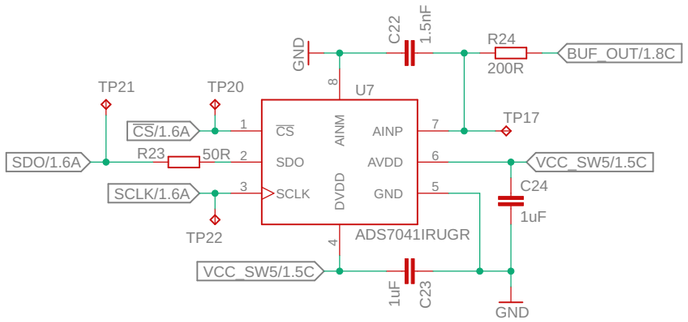

Schematic of an energy harvester module with advanced monitoring capabilities.

Released under the CC BY-SA 3.0 License
https://creativecommons.org/licenses/ by-sa/3.0/

Designed by Robbe Elsas

EHM

19-Jan-19 15:03

Sheet: 2/2