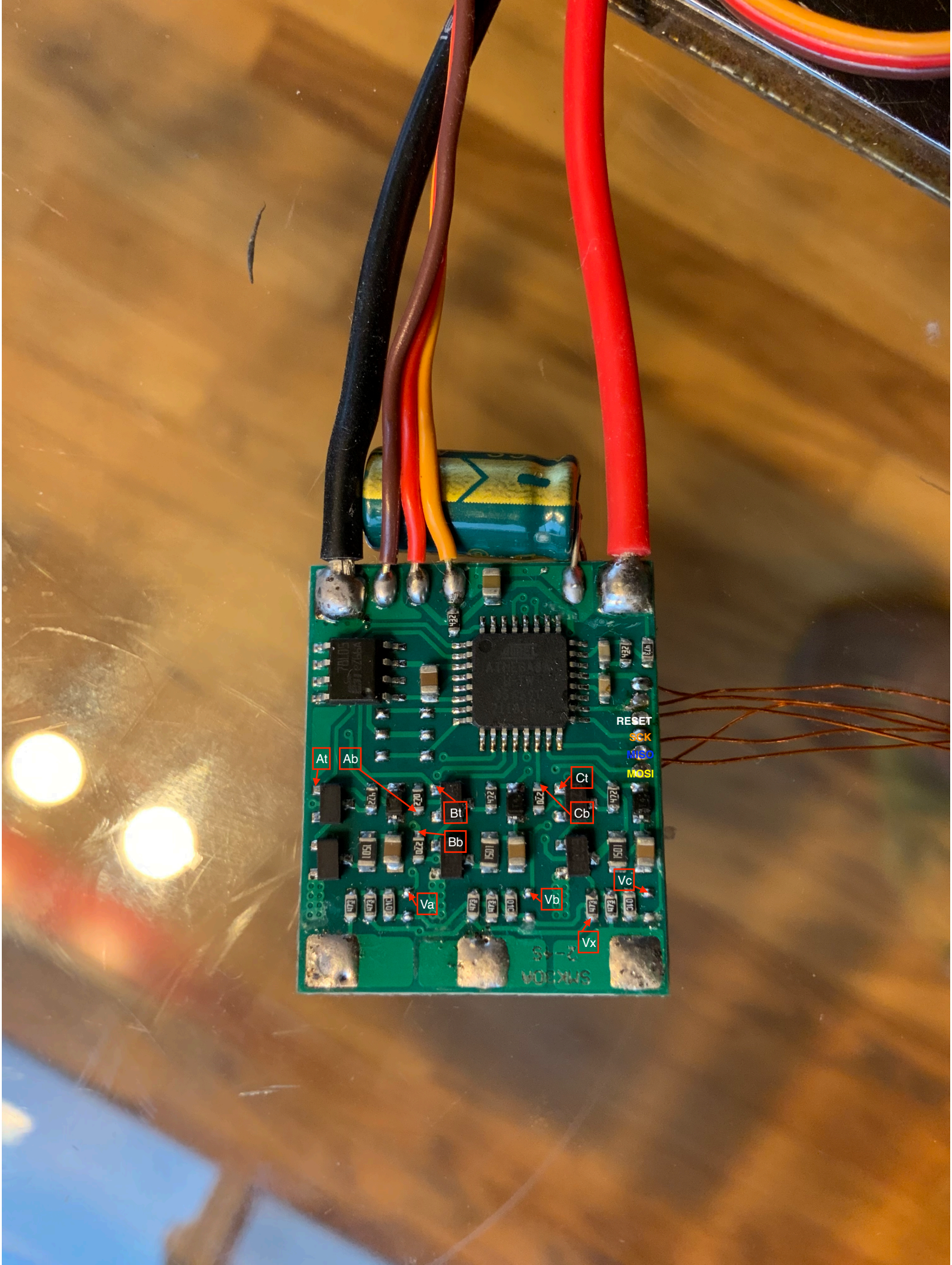
RESET
SCK
MISO
MOSI
At
Ab
Bt
Bb
Ct
Cb
Va
Vb
Vc
Vx

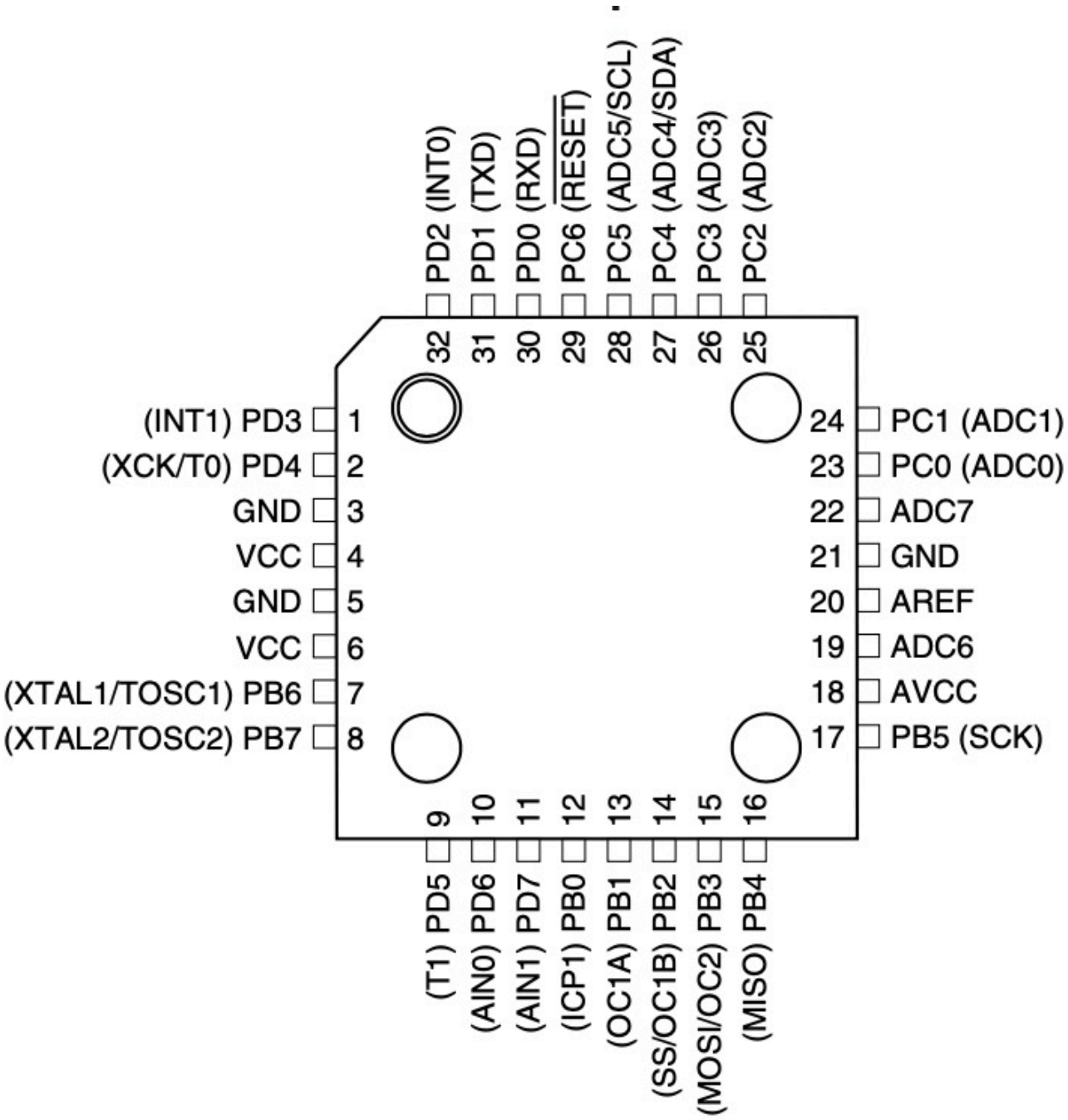
(INT1) PD3 1
(XCK/T0) PD4 2
GND 3
VCC 4
GND 5
VCC 6
(XTAL1/TOSC1) PB6 7
(XTAL2/TOSC2) PB7 8
9 (T1) PD5
10 (AIN0) PD6
11 (AIN1) PD7
12 (ICP1) PB0
13 (OC1A) PB1
14 (SS/OC1B) PB2
15 (MOSI/OC2) PB3
16 (MISO) PB4
17 PB5 (SCK)
18 AVCC
19 ADC6
20 AREF
21 GND
22 ADC7
23 PC0 (ADC0)
24 PC1 (ADC1)
25 PC2 (ADC2)
26 PC3 (ADC3)
27 PC4 (ADC4/SDA)
28 PC5 (ADC5/SCL)
29 PC6 (RESET)
30 PD0 (RXD)
31 PD1 (TXD)
32 PD2 (INT0)

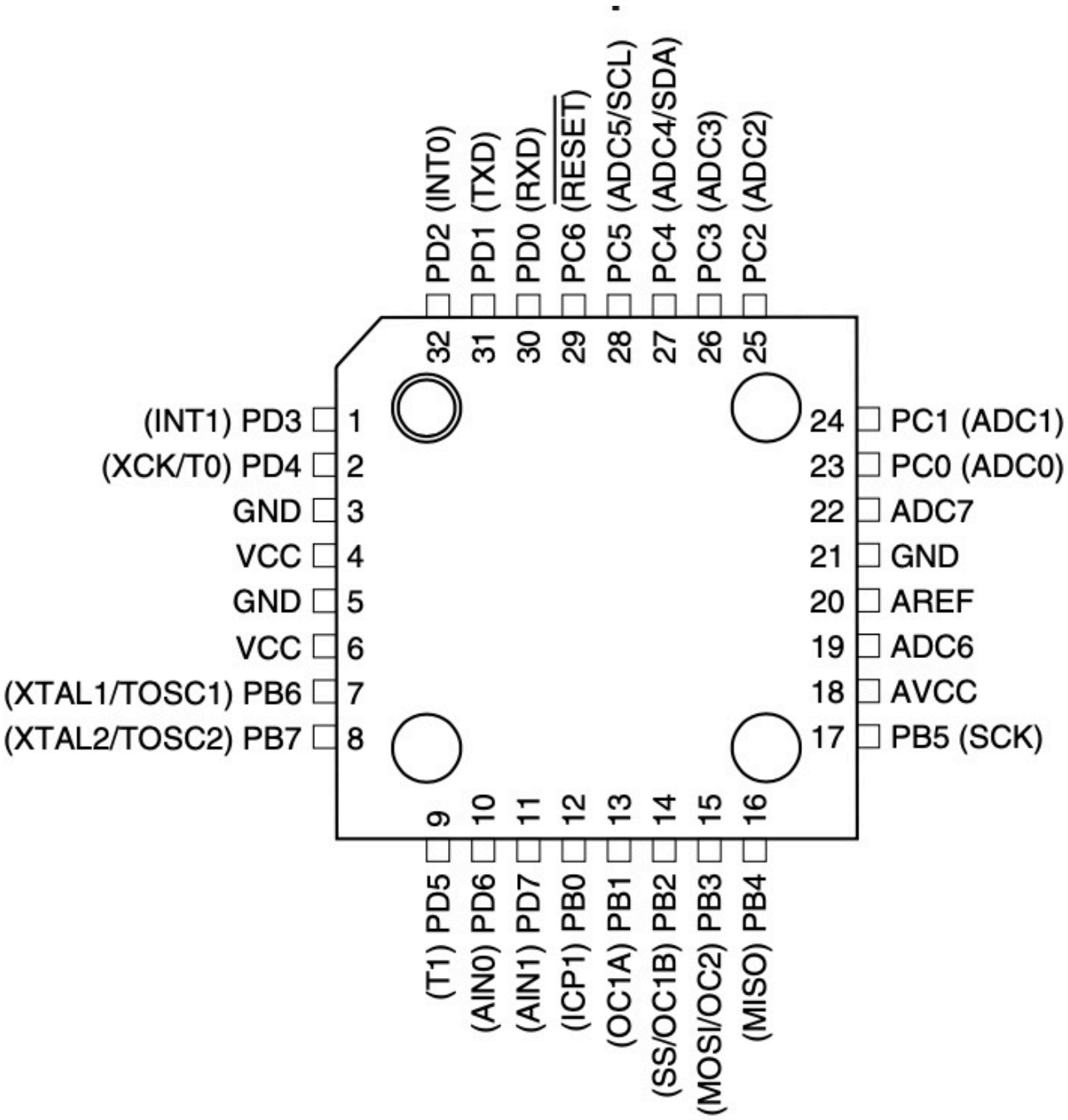
(INT1) PD3 1
(XCK/T0) PD4 2
GND 3
VCC 4
GND 5
VCC 6
(XTAL1/TOSC1) PB6 7
(XTAL2/TOSC2) PB7 8
9 (T1) PD5
10 (AIN0) PD6
11 (AIN1) PD7
12 (ICP1) PB0
13 (OC1A) PB1
14 (SS/OC1B) PB2
15 (MOSI/OC2) PB3
16 (MISO) PB4
17 PB5 (SCK)
18 AVCC
19 ADC6
20 AREF
21 GND
22 ADC7
23 PC0 (ADC0)
24 PC1 (ADC1)
25 PC2 (ADC2)
26 PC3 (ADC3)
27 PC4 (ADC4/SDA)
28 PC5 (ADC5/SCL)
29 PC6 (RESET)
30 PD0 (RXD)
31 PD1 (TXD)
32 PD2 (INT0)

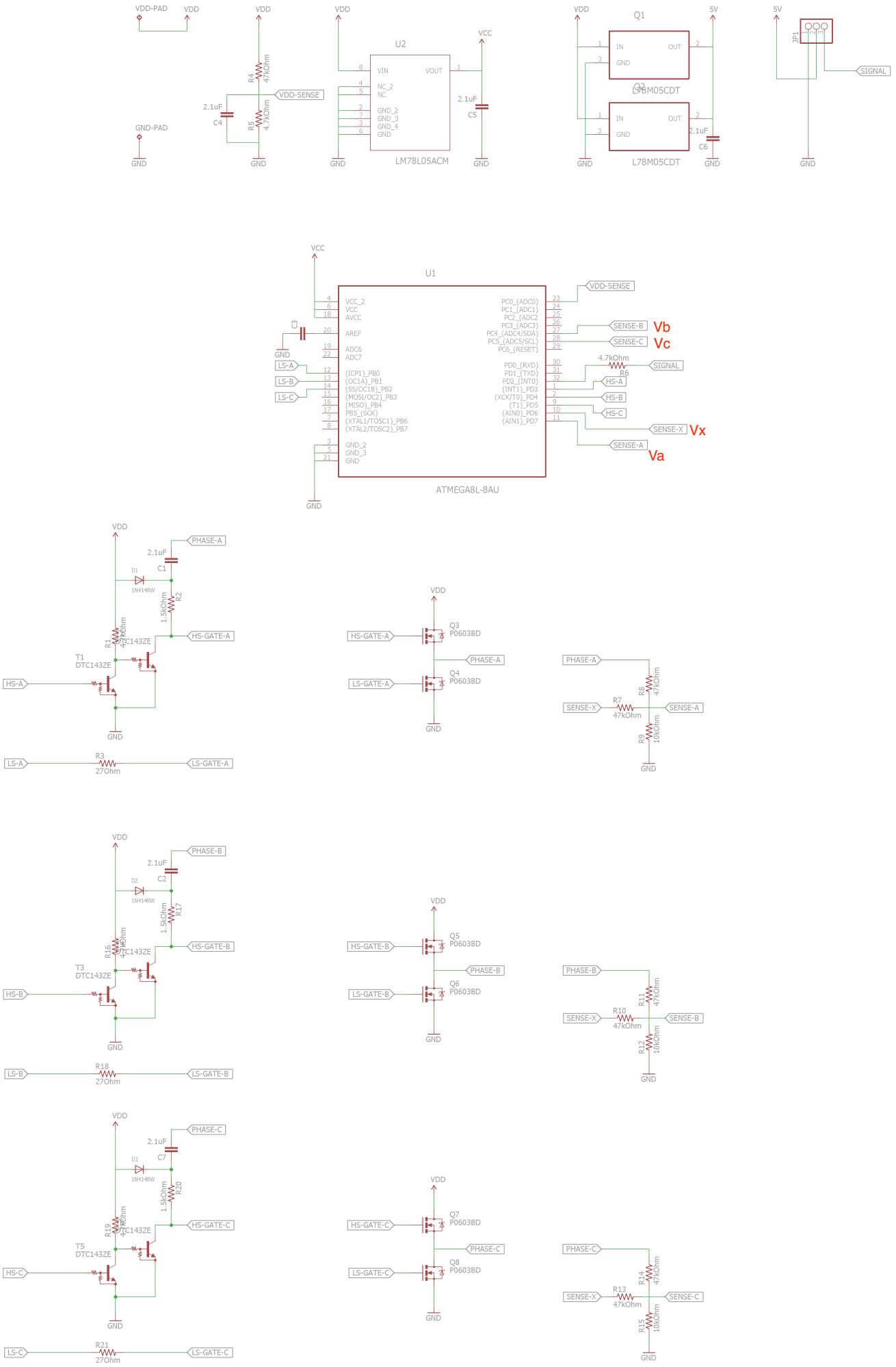
VDD-PAD
VDD
GND-PAD
GND
R4
47kOhm
R5
4.7kOhm
2.1uF
C4
VDD-SENSE
U2
VIN
VOUT
NC_2
NC
GND_2
GND_3
GND_4
GND
LM78L05ACM
VCC
2.1uF
C5
Q1
IN
OUT
GND
L78M05CDT
Q2
L78M05CDT
5V
2.1uF
C6
JP1
SIGNAL
U1
VCC_2
VCC
AVCC
AREF
ADC6
ADC7
(ICP1)_PB0
(OC1A)_PB1
(SS/OC1B)_PB2
(MOSI/OC2)_PB3
(MISO)_PB4
PB5_(SCK)
(XTAL1/TOSC1)_PB6
(XTAL2/TOSC2)_PB7
GND_2
GND_3
GND
PC0_(ADC0)
PC1_(ADC1)
PC2_(ADC2
PC3_(ADC3)
PC4_(ADC4/SDA)
PC5_(ADC5/SCL)
PC6_(RESET)
PD0_(RXD)
PD1_(TXD)
PD2_(INT0)
(INT1)_PD3
(XCK/T0)_PD4
(T1)_PD5
(AIN0)_PD6
(AIN1)_PD7
C3
LS-A
LS-B
LS-C
4.7kOhm
R6
SIGNAL
HS-A
HS-B
HS-C
SENSE-B
SENSE-C
SENSE-X
SENSE-A
Vb
Vc
Vx
Va
ATMEGA8L-8AU
PHASE-A
2.1uF
C1
D1
1N4148W
R2
1.5kOhm
R1
47kOhm
HS-GATE-A
T1
DTC143ZE
R3
27Ohm
LS-GATE-A
Q3
P0603BD
Q4
P0603BD
R7
47kOhm
R8
47kOhm
R9
10kOhm
PHASE-B
C2
D2
R17
R16
HS-GATE-B
T3
R18
LS-GATE-B
Q5
Q6
R10
R11
R12
PHASE-C
C7
D3
R20
R19
HS-GATE-C
T5
R21
LS-GATE-C
Q7
Q8
R13
R14
R15