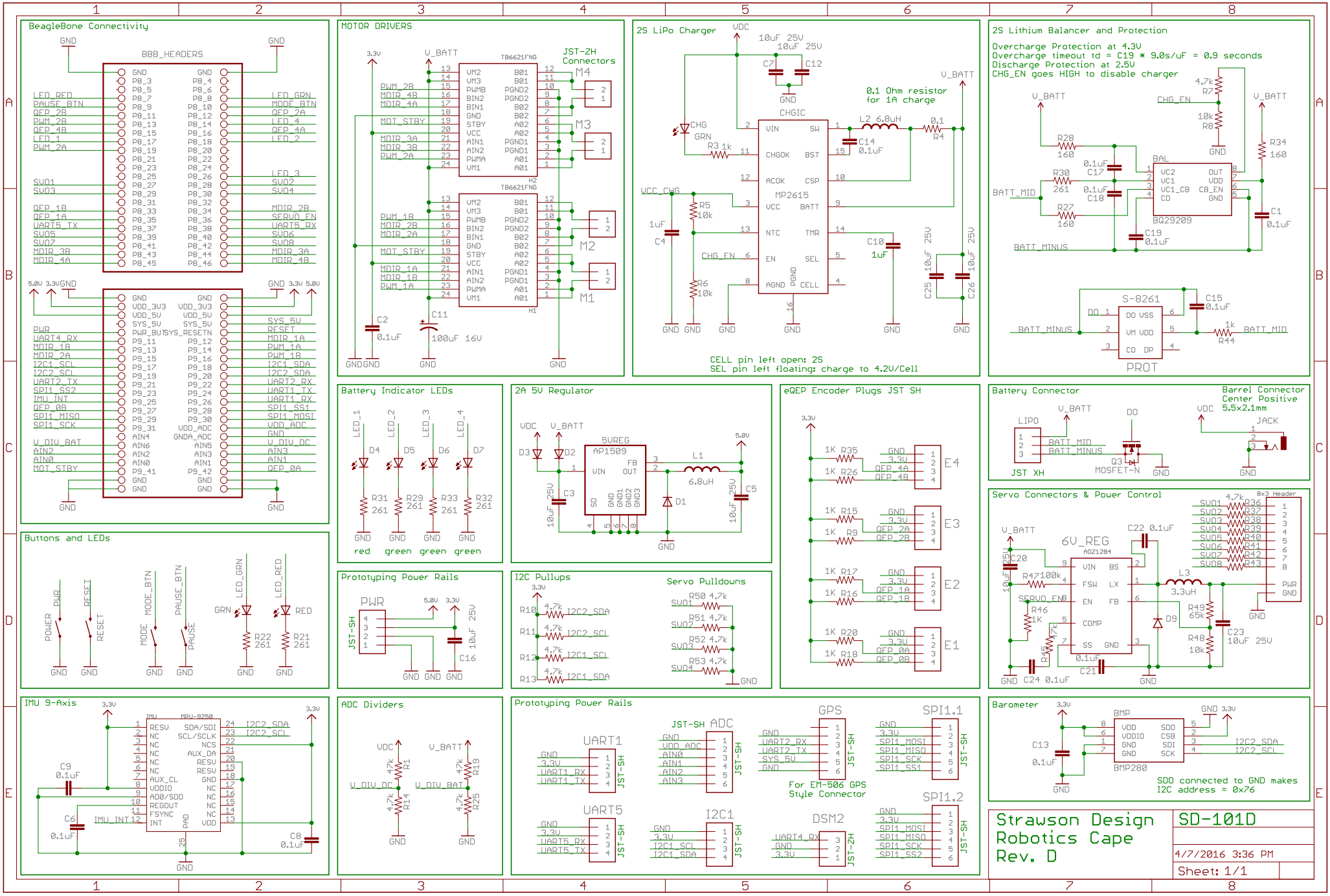
BeagleBone Connectivity
BBB_HEADERS
MOTOR DRIVERS
TB6621FNG
JST-2H Connectors
M1
M2
M3
M4
2S LiPo Charger
CHGIC
MP2615
0.1 Ohm resistor for 1A charge
CELL pin left open: 2S
SEL pin left floating: charge to 4.2V/Cell
2S Lithium Balancer and Protection
Overcharge Protection at 4.3V
Overcharge timeout td = C19 * 9.0s/uF = 0.9 seconds
Discharge Protection at 2.5V
CHG_EN goes HIGH to disable charger
BQ29209
S-8261
PROT
Battery Indicator LEDs
red green green green
2A 5V Regulator
AP1509
eQEP Encoder Plugs JST SH
Battery Connector
Barrel Connector Center Positive 5.5x2.1mm
JST XH
Buttons and LEDs
Servo Connectors & Power Control
6V_REG
AOZ1284
Prototyping Power Rails
I2C Pullups
Servo Pulldowns
IMU 9-Axis
MPU-9250
ADC Dividers
Prototyping Power Rails
For EM-506 GPS Style Connector
Barometer
BMP280
SDO connected to GND makes I2C address = 0x76
Strawson Design
Robotics Cape
Rev. D
SD-101D
4/7/2016 3:36 PM
Sheet: 1/1