Power

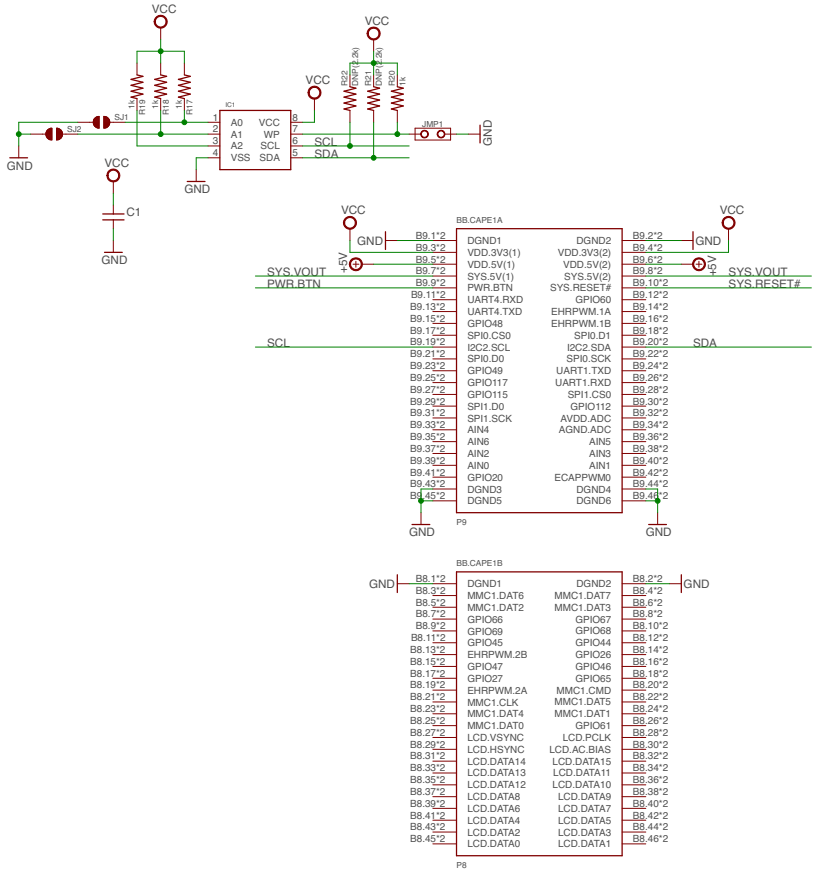

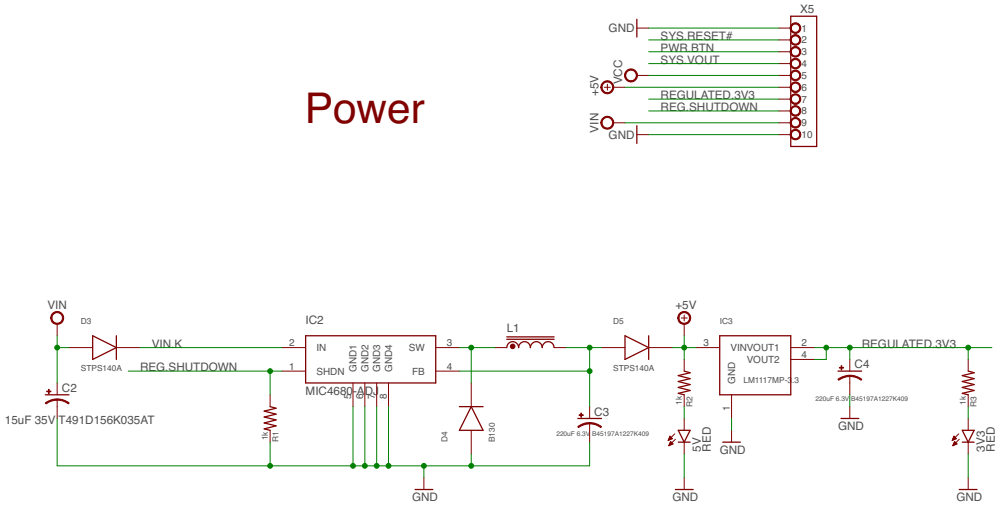

TITLE: Power_Cape	
Document Number:	REV:
Date: 10/18/17 11:11 AM	Sheet: 1/1