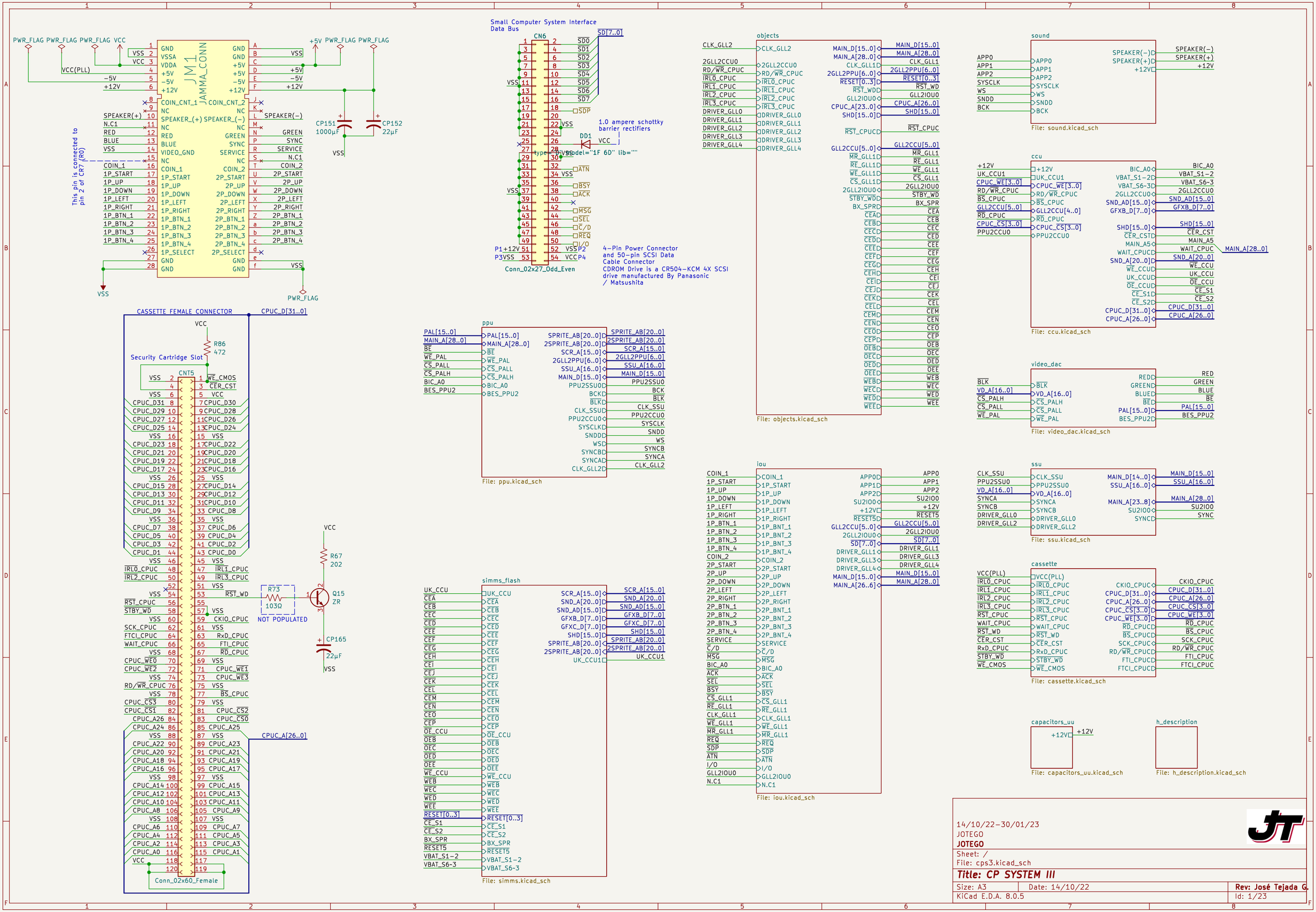

14/10/22-30/01/23
JOTEGO
JOTEGO
Sheet: /
File: cps3.kicad_sch

Title: CP SYSTEM III

Size: A3	Date: 14/10/22	Rev: José Tejada G.
KiCad E.D.A. 8.0.5		Id: 1/23

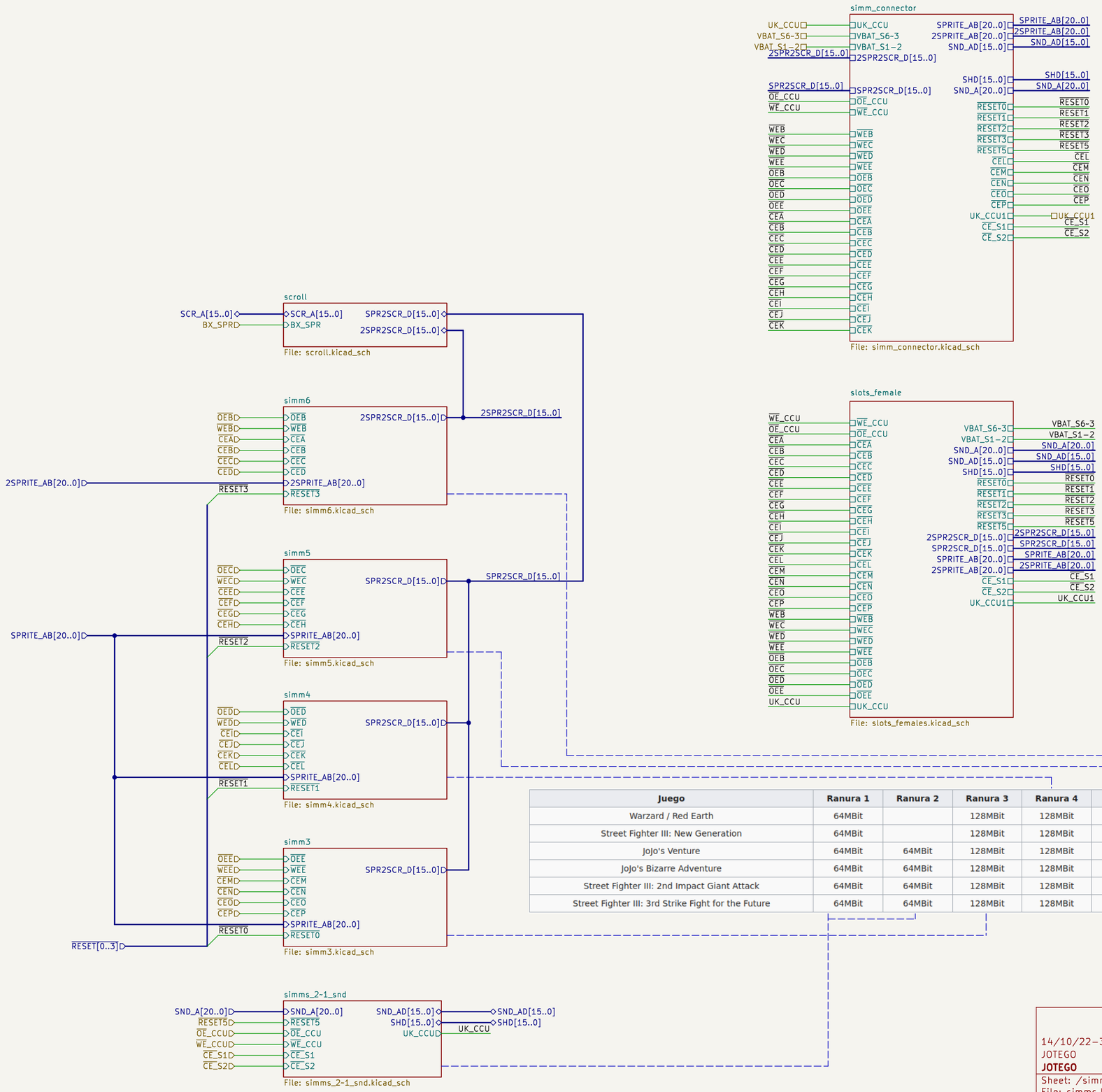

Juego	Ranura 1	Ranura 2	Ranura 3	Ranura 4	Ranura 5	Ranura 6
Warzard / Red Earth	64MBit		128MBit	128MBit	32MBit o 128MBit	
Street Fighter III: New Generation	64MBit		128MBit	128MBit	32MBit o 128MBit	
JoJo's Venture	64MBit	64MBit	128MBit	128MBit	32MBit o 128MBit	
JoJo's Bizarre Adventure	64MBit	64MBit	128MBit	128MBit	128MBit	
Street Fighter III: 2nd Impact Giant Attack	64MBit	64MBit	128MBit	128MBit	128MBit	
Street Fighter III: 3rd Strike Fight for the Future	64MBit	64MBit	128MBit	128MBit	128MBit	128MBit

14/10/22-30/01/23
JOTEGO
JOTEGO

Sheet: /simms_flash/
File: simms.kicad_sch

Title: CP SYSTEM III

Size: A3	Date: 14/10/22	Rev: José Tejada G.
KiCad E.D.A. 8.0.5		Id: 2/23

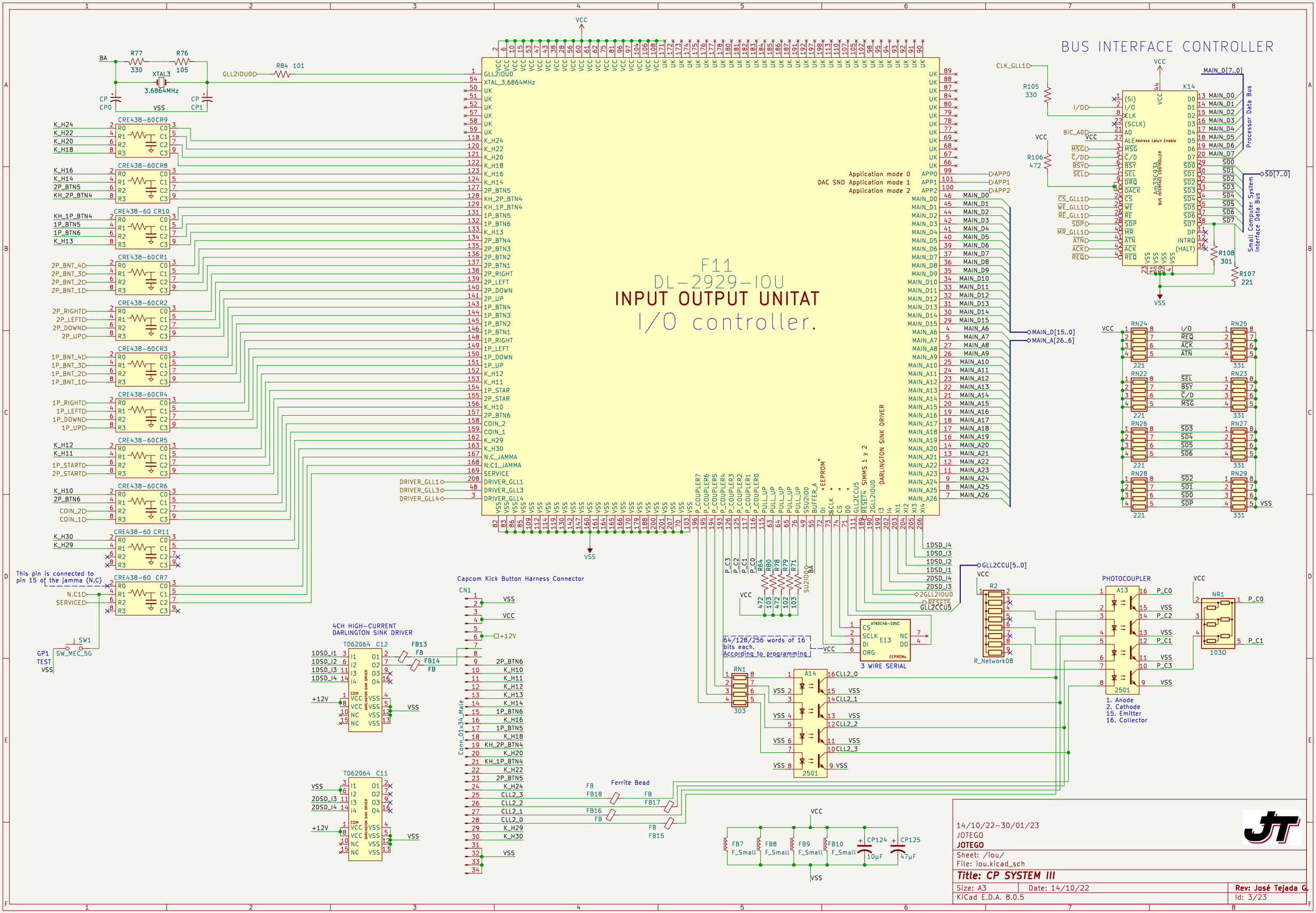
F11
DL-2929-IOU
INPUT OUTPUT UNITAT
I/O controller.
BUS INTERFACE CONTROLLER
Am33C93A
BUS INTERFACE CONTROLLER
Processor Data Bus
Small Computer System Interface Data Bus
DARLINGTON SINK DRIVER
Capcom Kick Button Harness Connector
4CH HIGH-CURRENT DARLINGTON SINK DRIVER
TD62064
3 WIRE SERIAL
PHOTOCOUPLER
This pin is connected to pin 15 of the jamma (N.C)
64/128/256 words of 16 bits each. According to programming
Application mode 0
DAC SND Application mode 1
Application mode 2
1. Anode
2. Cathode
15. Emitter
16. Collector
14/10/22-30/01/23
JOTEGO
JOTEGO
Sheet: /iou/
File: iou.kicad_sch
Title: CP SYSTEM III
Size: A3
Date: 14/10/22
Rev: José Tejada G.
KiCad E.D.A. 8.0.5
Id: 3/23

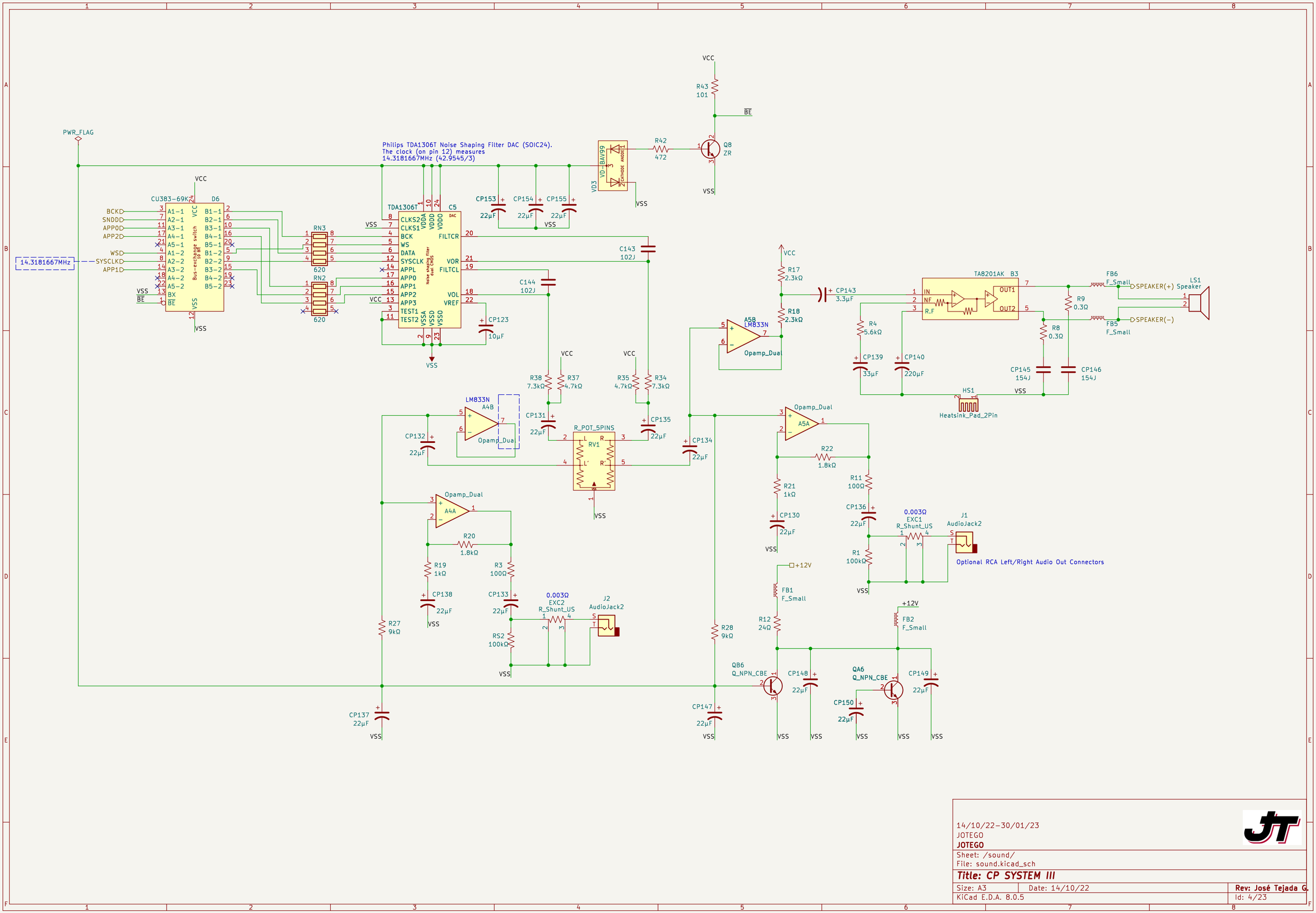

14/10/22–30/01/23
JOTEGO
JOTEGO

Sheet: /sound/
File: sound.kicad_sch

Title: CP SYSTEM III

Size: A3	Date: 14/10/22	**Rev: José Tejada G.**
KiCad E.D.A. 8.0.5		Id: 4/23

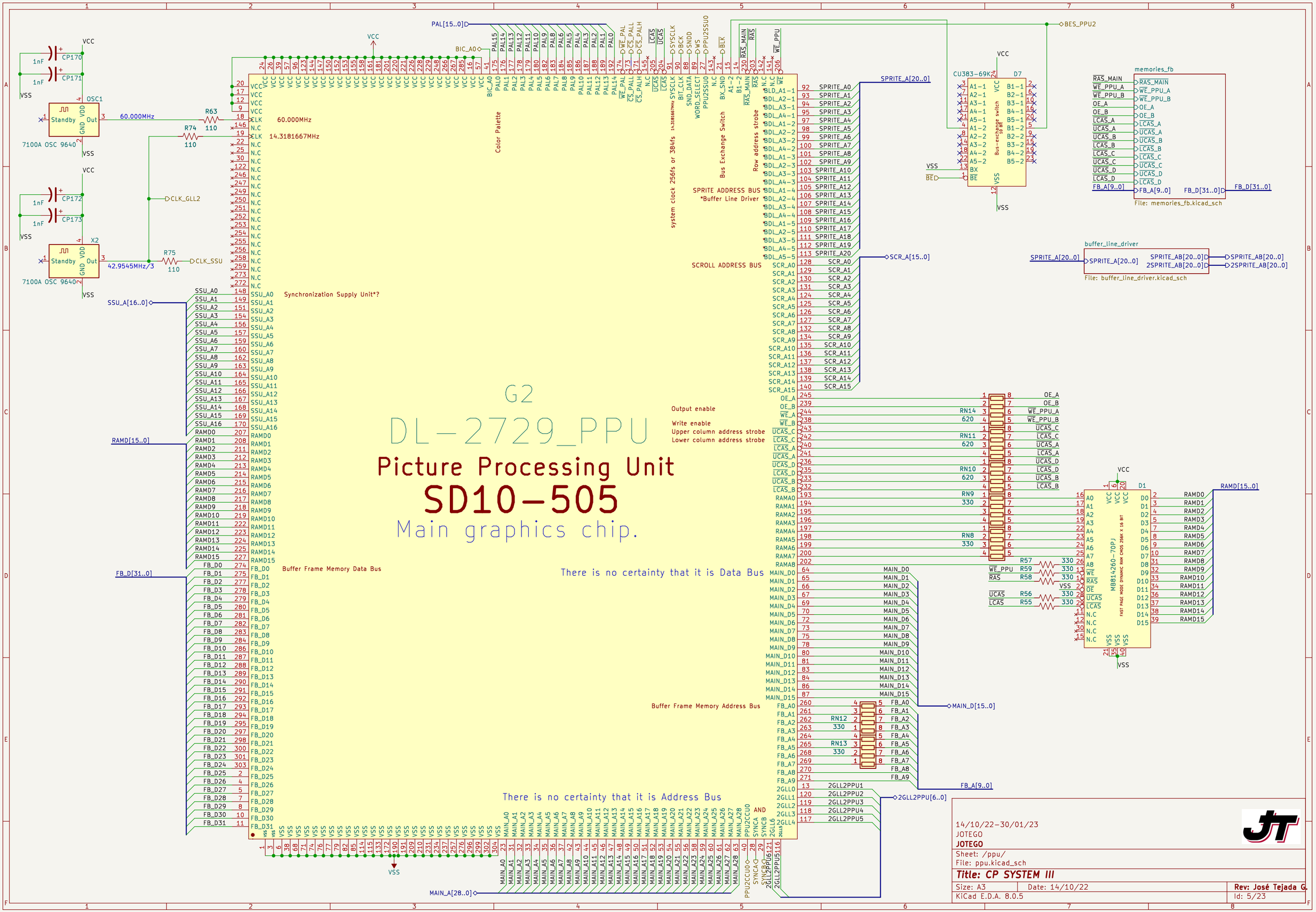
G2
DL-2729_PPU
Picture Processing Unit
SD10-505
Main graphics chip.
Color Palette
Synchronization Supply Unit*?
Buffer Frame Memory Data Bus
Bus Exchange Switch
Row address strobe
SPRITE ADDRESS BUS
*Buffer Line Driver
SCROLL ADDRESS BUS
Output enable
Write enable
Upper column address strobe
Lower column address strobe
There is no certainty that it is Data Bus
Buffer Frame Memory Address Bus
There is no certainty that it is Address Bus
system clock 256fs or 384fs
60.000MHz
14.3181667MHz
42.9545MHz/3
7100A OSC 9640
CU383-69K
MB814260-70PJ
memories_fb
File: memories_fb.kicad_sch
buffer_line_driver
File: buffer_line_driver.kicad_sch
14/10/22-30/01/23
JOTEGO
Sheet: /ppu/
File: ppu.kicad_sch
Title: CP SYSTEM III
Size: A3
Date: 14/10/22
KiCad E.D.A. 8.0.5
Rev: José Tejada G.
Id: 5/23

14/10/22-30/01/23
JOTEGO
JOTEGO

Sheet: /capacitors_uu/
File: capacitors_uu.kicad_sch

Title: CP SYSTEM III

Size: A3	Date: 14/10/22	**Rev: José Tejada G.**
KiCad E.D.A. 8.0.5		Id: 6/23

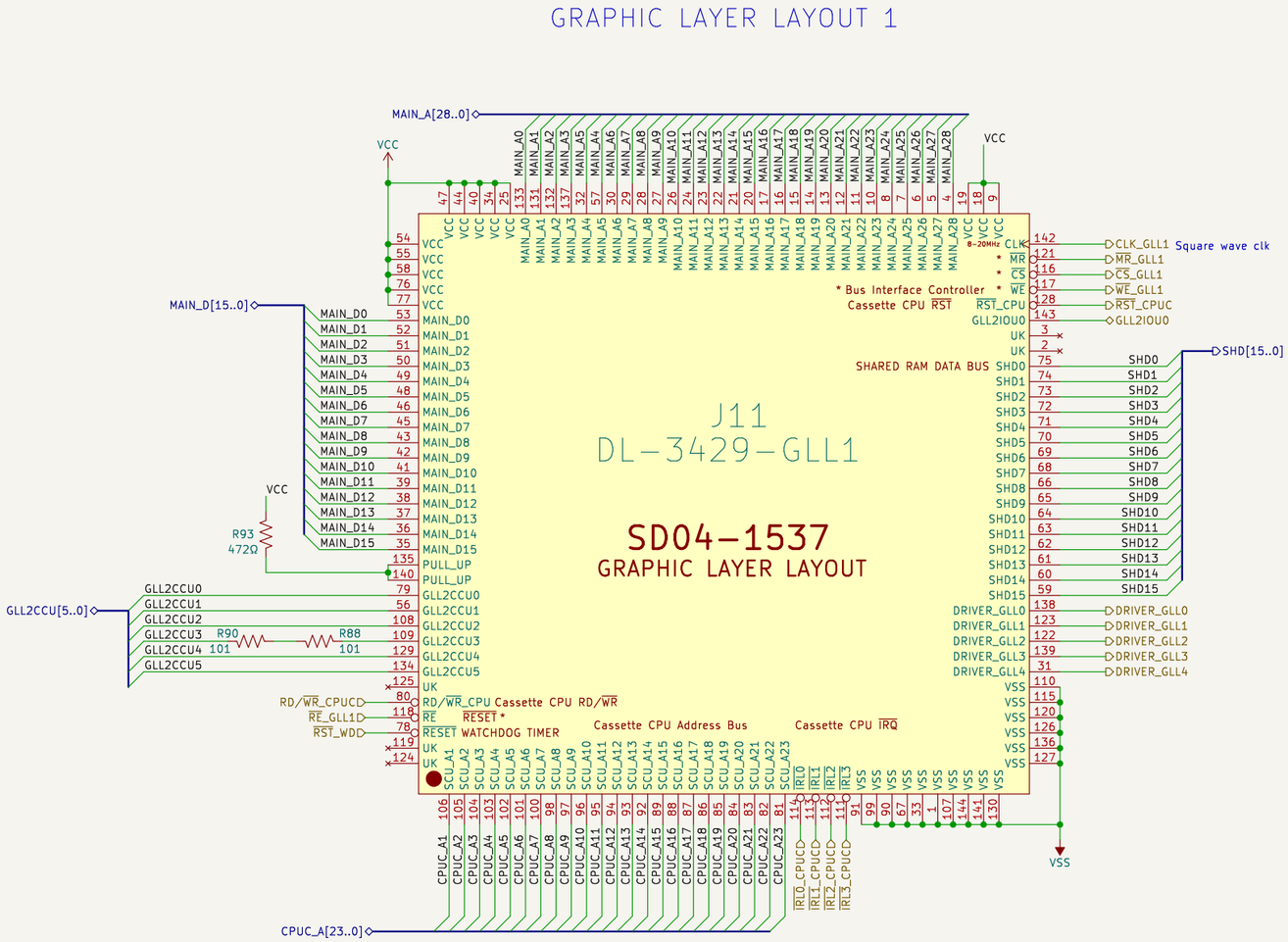

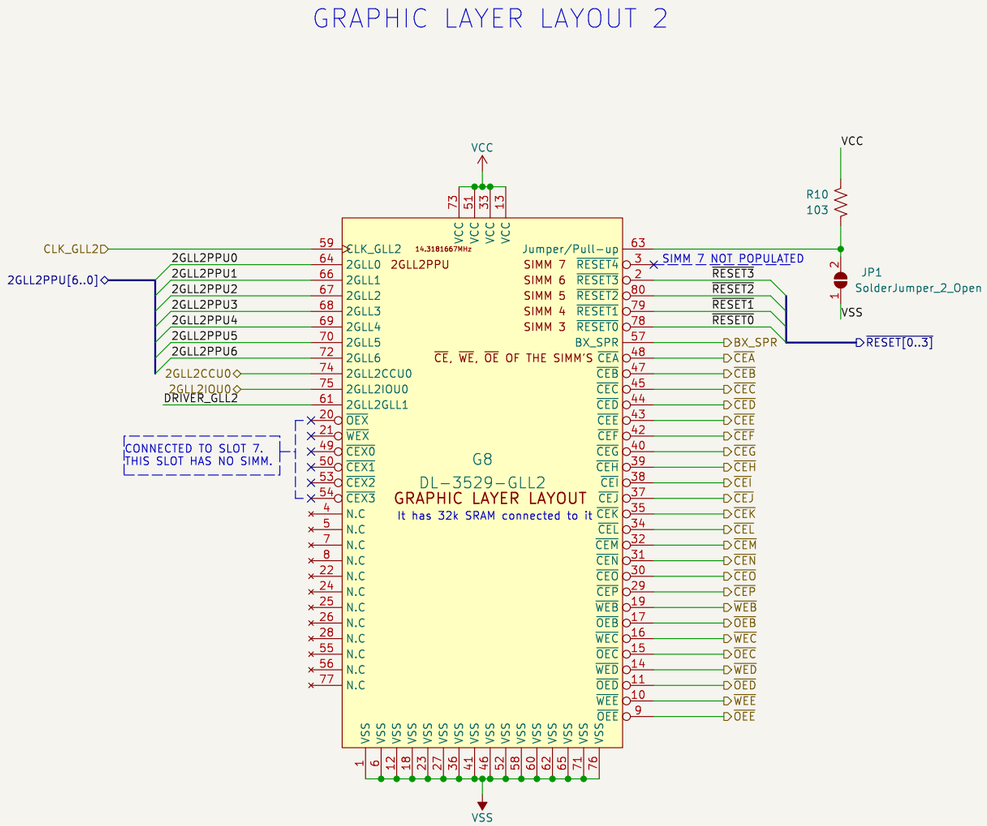

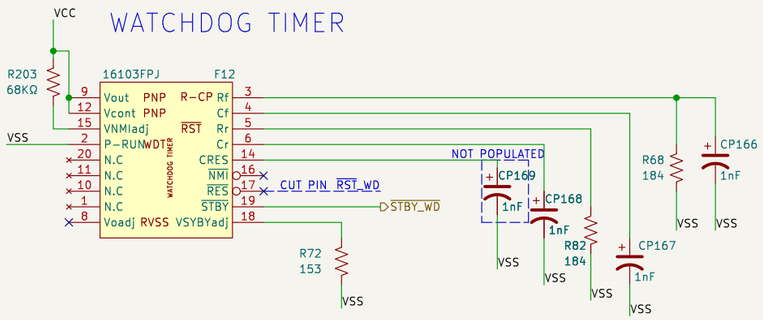

14/10/22-30/01/23
JOTEGO
JOTEGO

Sheet: /objects/
File: objects.kicad_sch

Title: CP SYSTEM III

Size: A3	Date: 14/10/22	**Rev: José Tejada G.**
KiCad E.D.A. 8.0.5		Id: 7/23

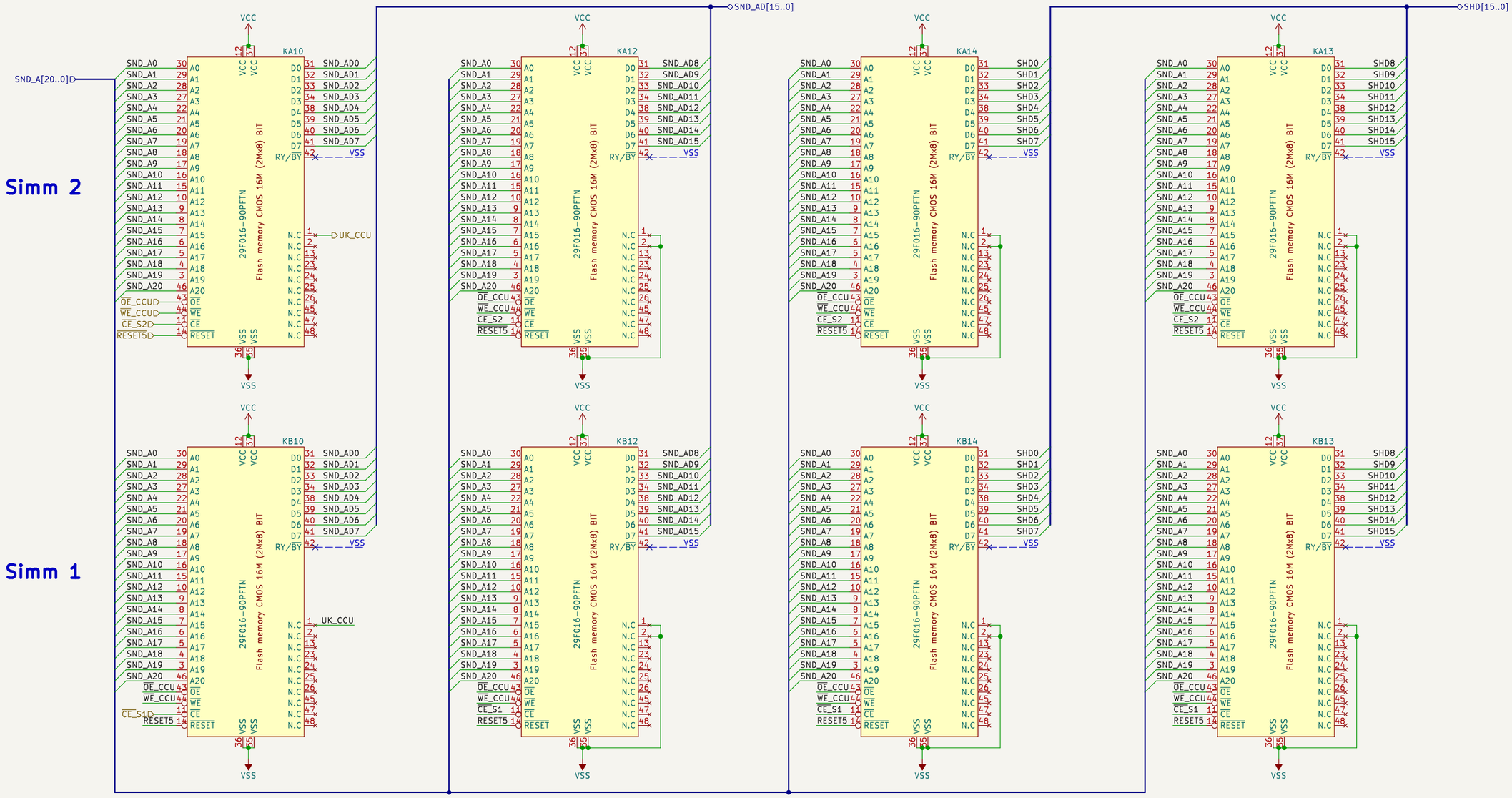

14/10/22-30/01/23
JOTEGO
JOTEGO

Sheet: /simms_flash/simms_2-1_snd/
File: simms_2-1_snd.kicad_sch

Title: CP SYSTEM III

Size: A3	Date: 14/10/22	**Rev: José Tejada G.**
KiCad E.D.A. 8.0.5		Id: 8/23

Simm 3

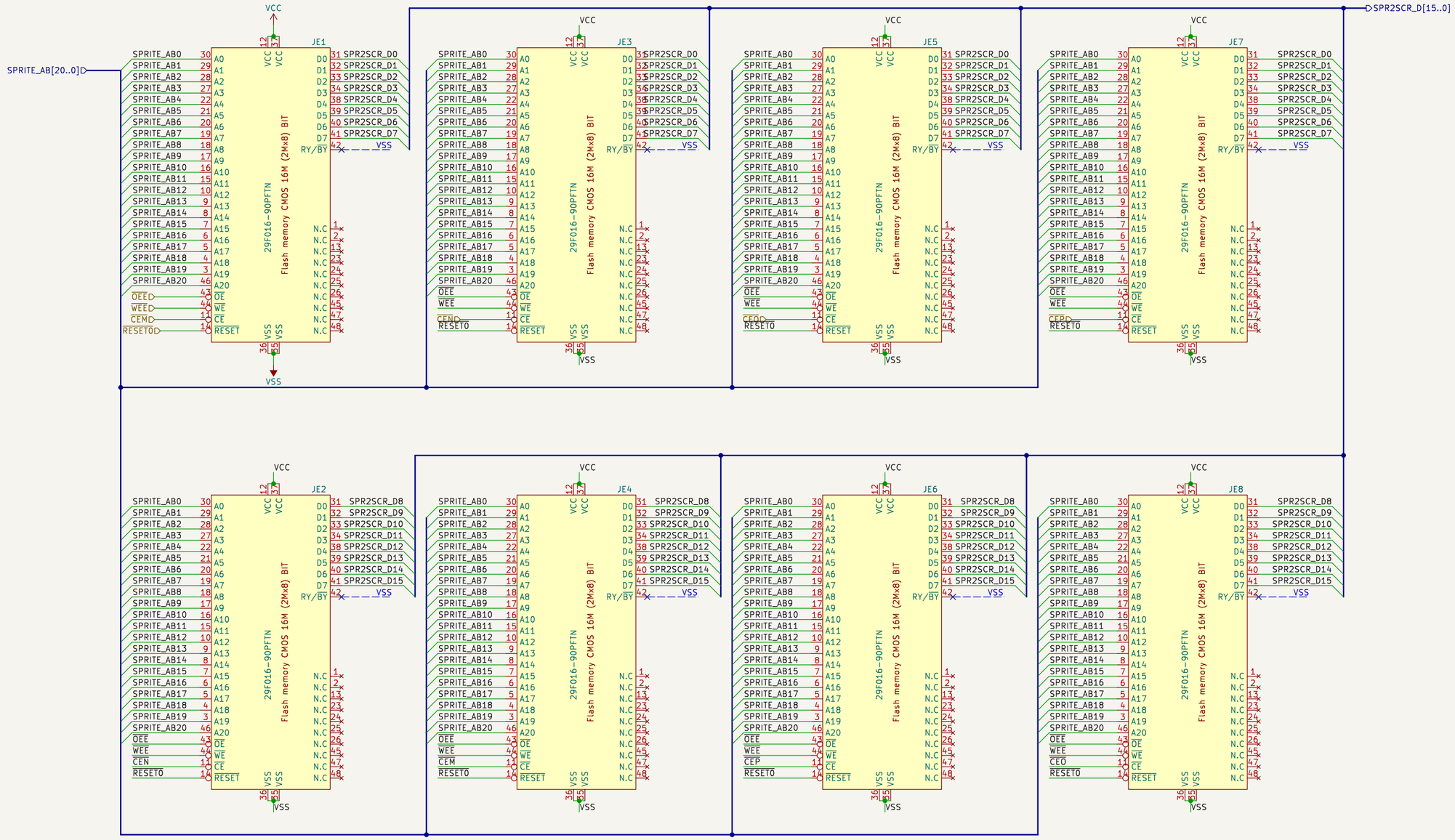

14/10/22-30/01/23
JOTEGO
JOTEGO

Sheet: /simms_flash/simm3/
File: simm3.kicad_sch

Title: CP SYSTEM III

Size: A3	Date: 14/10/22	**Rev: José Tejada G.**
KiCad E.D.A. 8.0.5		Id: 9/23

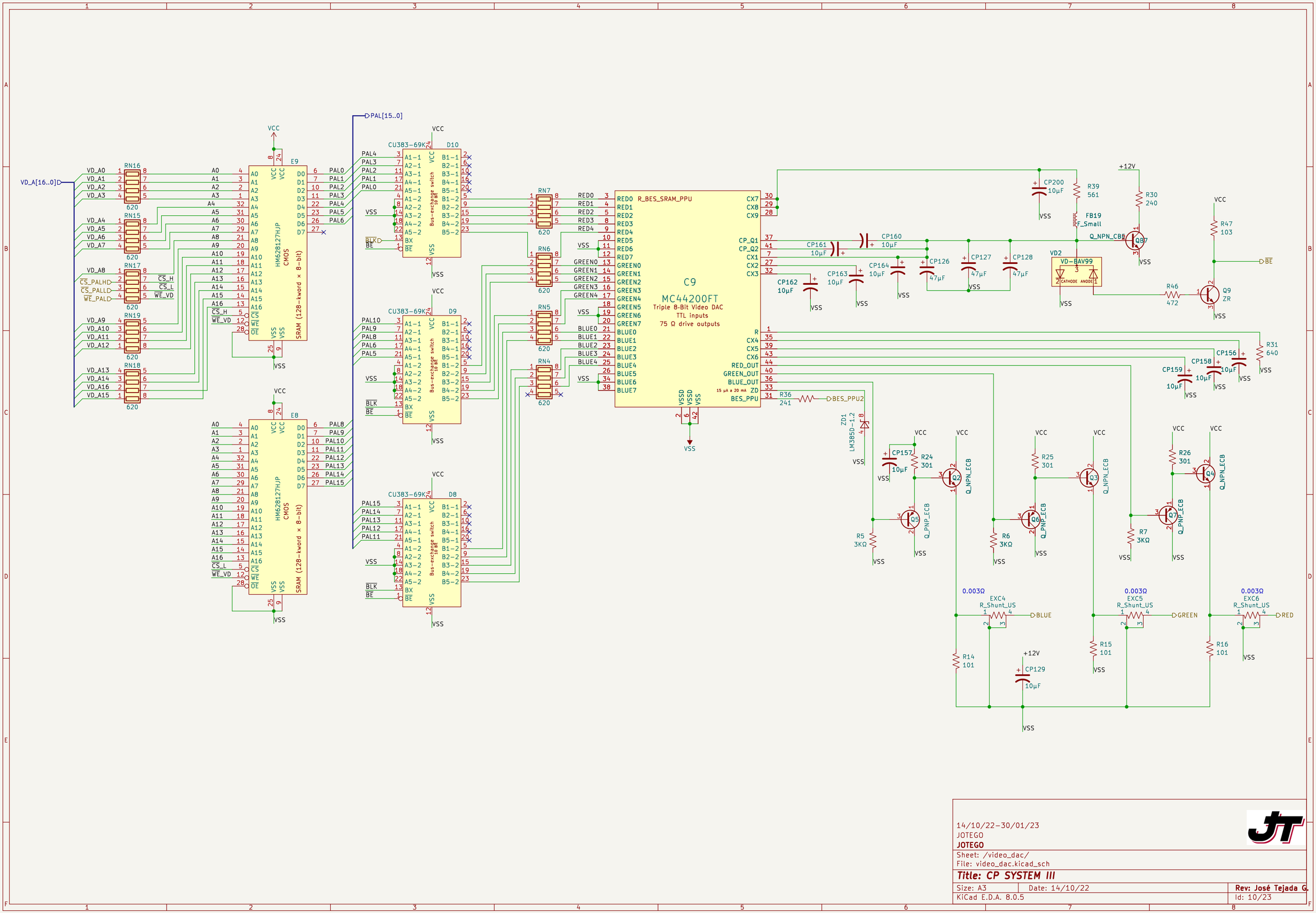

14/10/22-30/01/23
JOTEGO
JOTEGO

Sheet: /video_dac/
File: video_dac.kicad_sch

Title: CP SYSTEM III

Size: A3	Date: 14/10/22	Rev: José Tejada G.
KiCad E.D.A. 8.0.5		Id: 10/23

MEMORIES FRAME BUFFER

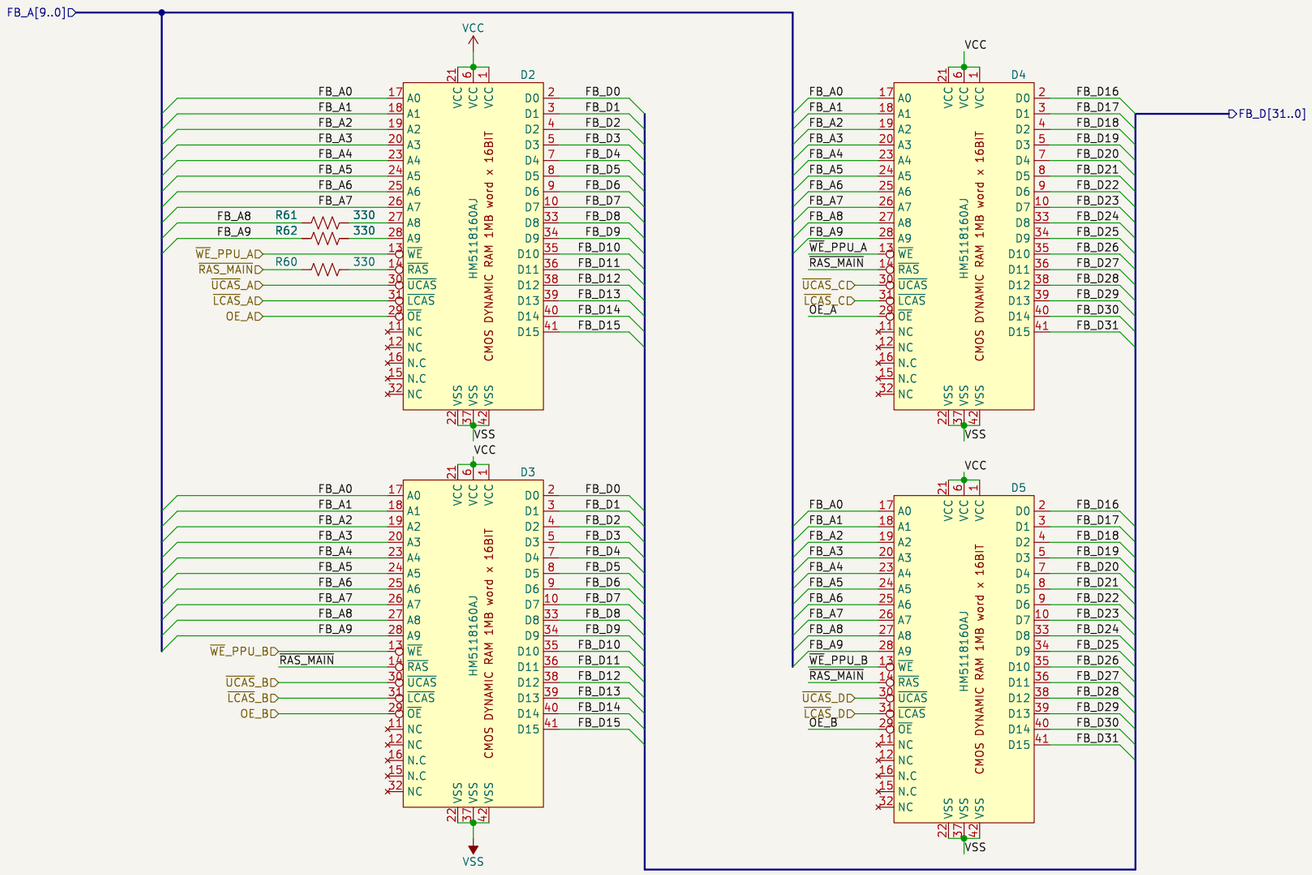

14/10/22-30/01/23
JOTEGO
JOTEGO

Sheet: /ppu/memories_fb/
File: memories_fb.kicad_sch

Title: CP SYSTEM III

Size: A3	Date: 14/10/22	**Rev: José Tejada G.**
KiCad E.D.A. 8.0.5		Id: 11/23

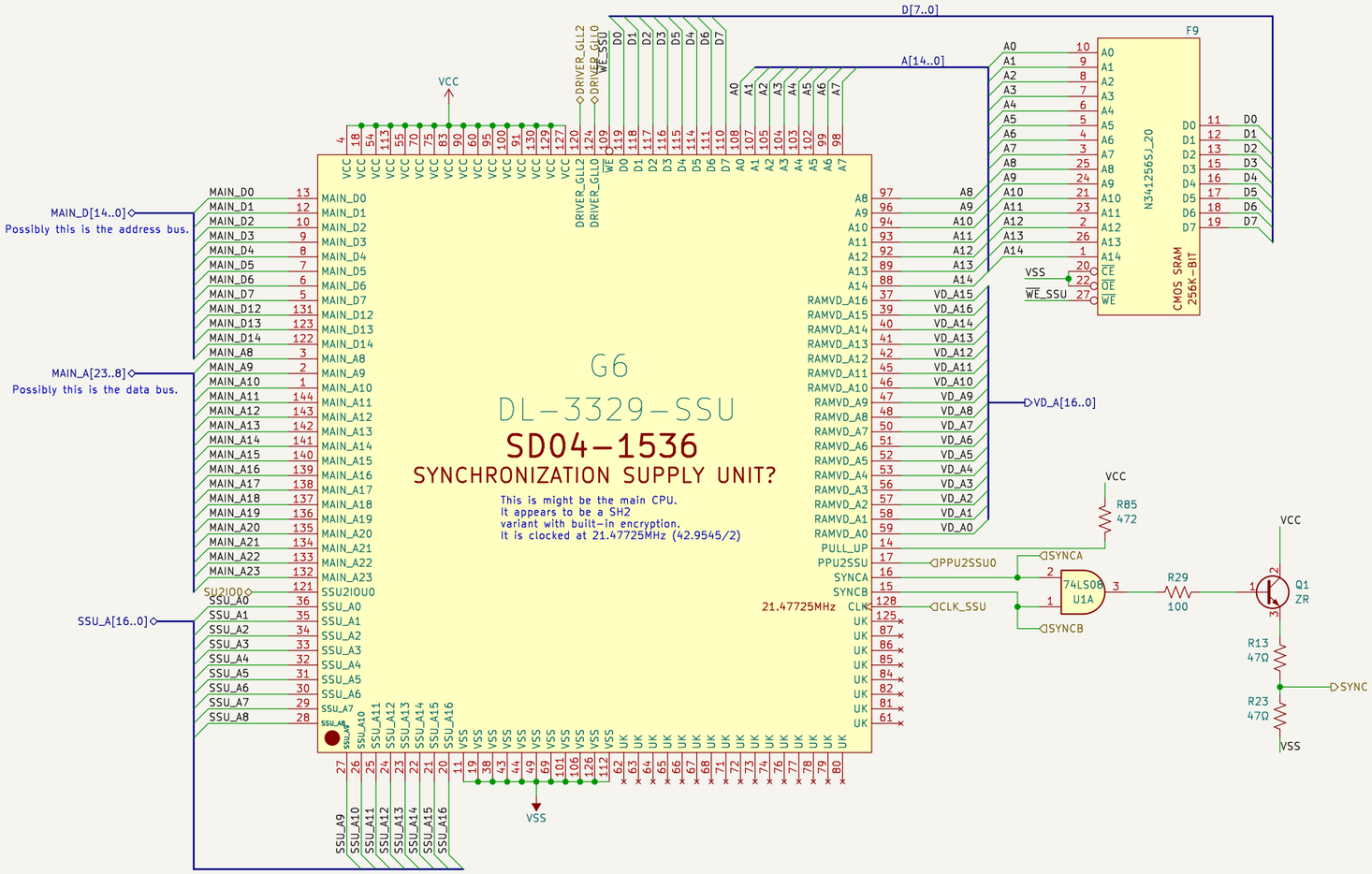

14/10/22-30/01/23
JOTEGO
JOTEGO

Sheet: /ssu/
File: ssu.kicad_sch

Title: CP SYSTEM III

Size: A3	Date: 14/10/22	Rev: José Tejada G.
KiCad E.D.A. 8.0.5		Id: 12/23

Simm 6

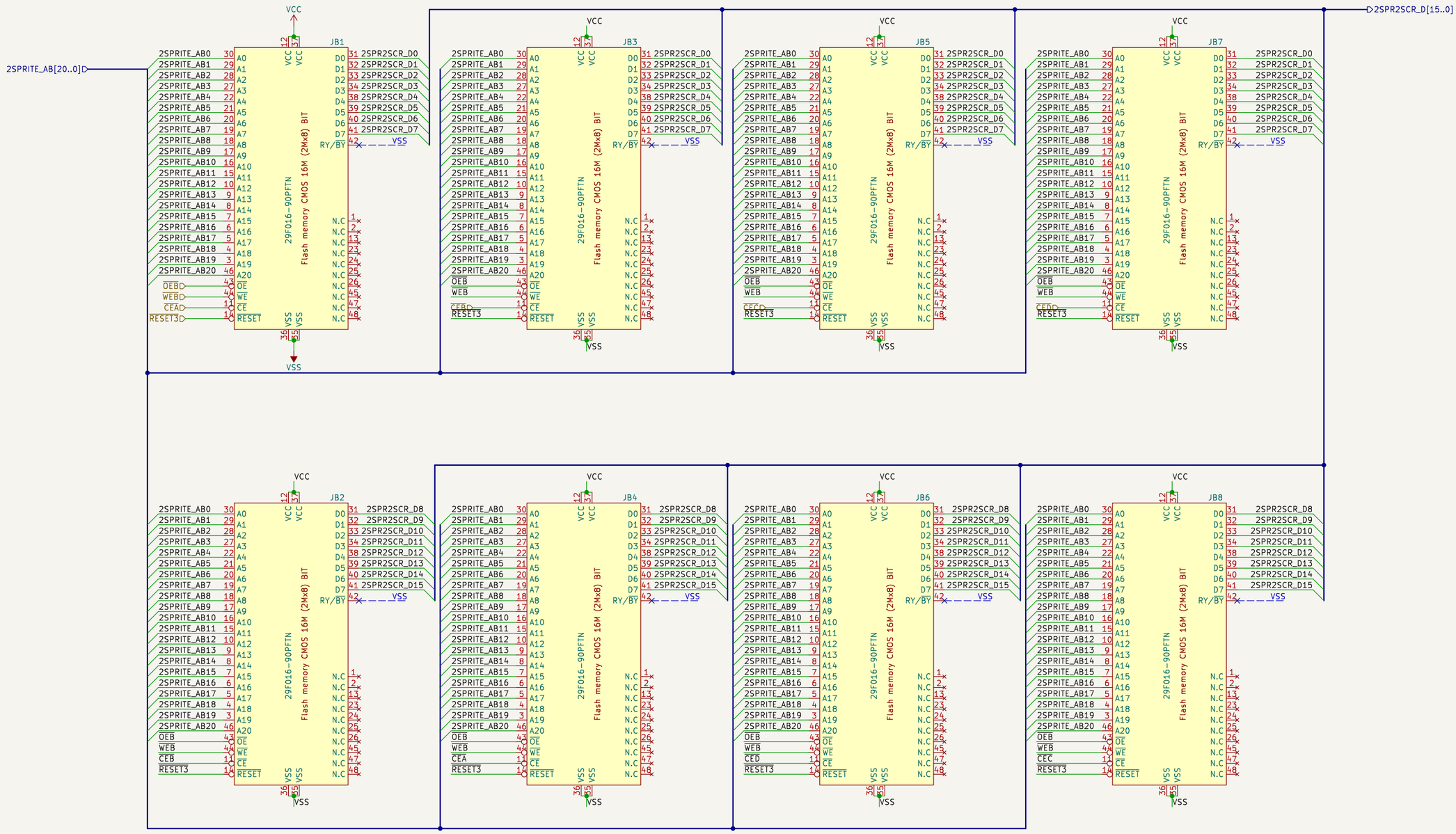

14/10/22-30/01/23
JOTEGO
JOTEGO

Sheet: /simms_flash/simm6/
File: simm6.kicad_sch

Title: CP SYSTEM III

Size: A3	Date: 14/10/22	**Rev: José Tejada G.**
KiCad E.D.A. 8.0.5		Id: 13/23

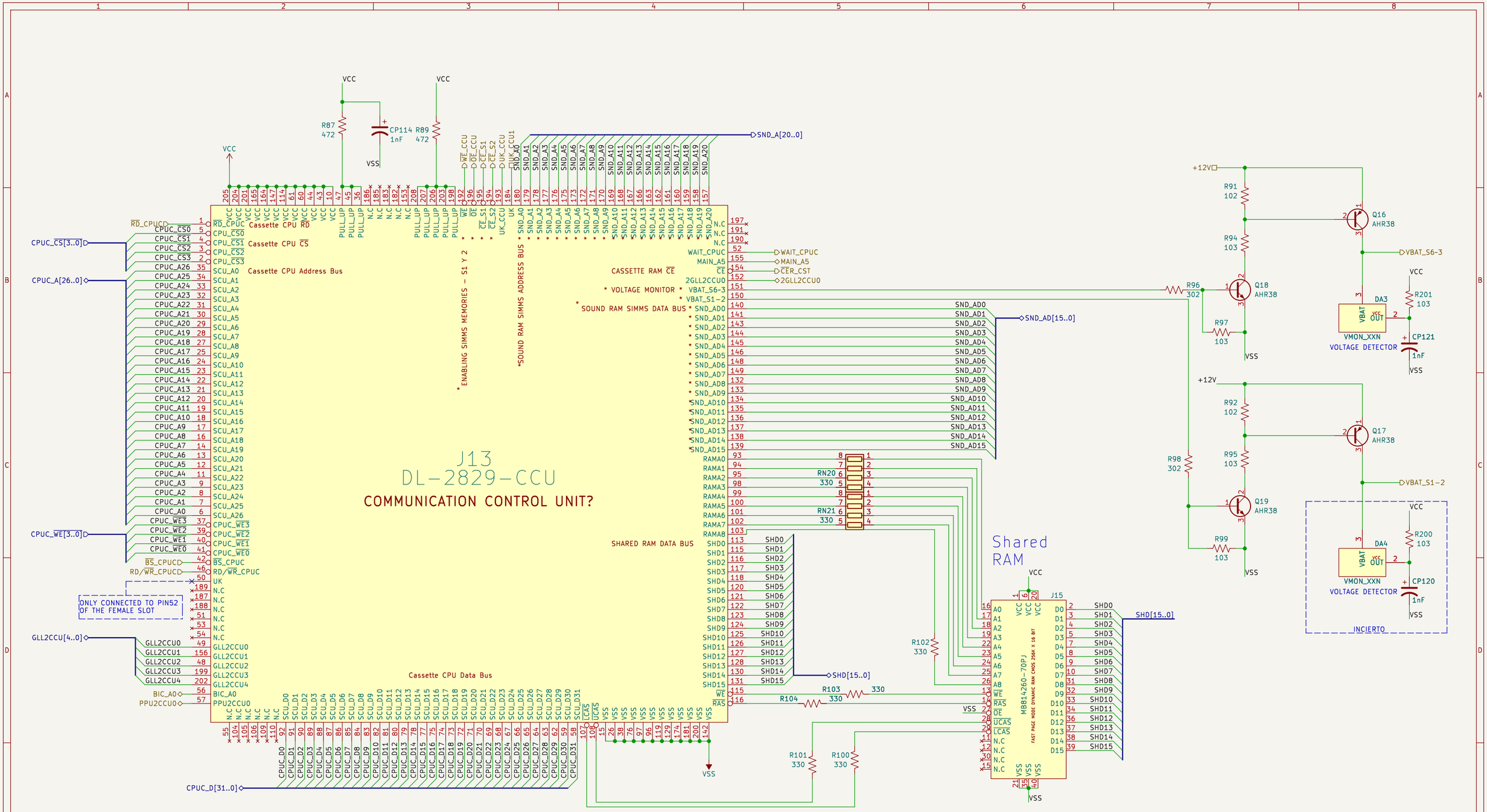

14/10/22-30/01/23
JOTEGO
JOTEGO

Sheet: /ccu/
File: ccu.kicad_sch

Title: CP SYSTEM III

Size: A3	Date: 14/10/22	**Rev: José Tejada G.**
KiCad E.D.A. 8.0.5		Id: 15/23

HARDWARE DESCRIPTION

Main CPU : Main CPU: Hitachi HD6417099 (SH-2) at 25 MHz
Storage : SCSI CD Rom, RAM and Flash ROM.
RAM : SIMMs on the left will physically hold 16M of data each (each has 8x 16M Flash ROMs, there's 4 SIMMs plugged in on this board). The SIMMs on the right will physically hold 8M each (there's 4 Flash ROMs on each board and there are 2 SIMMs plugged in)
OSC : 60MHz. 42.9545MHz, XTAL :3.6864MHz

**Sound chip: 16-channel 8-bit sample player, stereo*
**Maximum color palette: 16 million shades[5]*
**Maximum number of colors on screen: 32,768[6] (15-bit colour, 555 RGB)*
**Palette size: 131,072 pens*
**Colors per tile (backgrounds / sprites): 64 (6 bits per pixel) or 256 (8 bits per pixel), selectable*
**Colors per tile (text overlay): 16 (4 bits per pixel)*
**Maximum number of objects: 1024, with hardware scaling[6]*
**Scroll faces: 4 regular + 1 text overlay 'score screen' layer*
**Scroll features: Horizontal & vertical scrolling, linescroll, linezoom[6]*
**Framebuffer zooming*
**Color blending effects*
**Hardware RLE decompression of 6 bpp and 8 bpp graphics through DMA*
**Resolution, pixels: 384×224 (standard mode) / 496×224 (widescreen mode)*

KNOWN CP SYSTEM III (CPS3) GAME LIST

All six games are developed by Capcom and are all head-to-head fighting games in a list of games that appears to be as small as the CP System Dash library.

English title	Release date	Japanese title
Red Earth	1996-11-21	*War-Zard* (ウォーザード)
Street Fighter III: New Generation	1997-02-04	*Street Fighter III* (ストリートファイターIII)
Street Fighter III 2nd Impact: Giant Attack	1997-09-30	*Street Fighter III 2nd Impact* (ストリートファイターIII 2nd Impact)
JoJo's Bizarre Adventure	1998-12-02	*JoJo no Kimyō na Bōken* (ジョジョの奇妙な冒険)
Street Fighter III 3rd Strike: Fight for the Future	1999-05-12	*Street Fighter III 3rd Strike* (ストリートファイターIII 3rd Strike)
JoJo's Bizarre Adventure: Heritage for the Future	1999-09-13	*JoJo no Kimyō na Bōken Mirai e no Isan* (ジョジョの奇妙な冒険 未来への遺産)

Font:
The Museum Arcade System 16

Slot Female

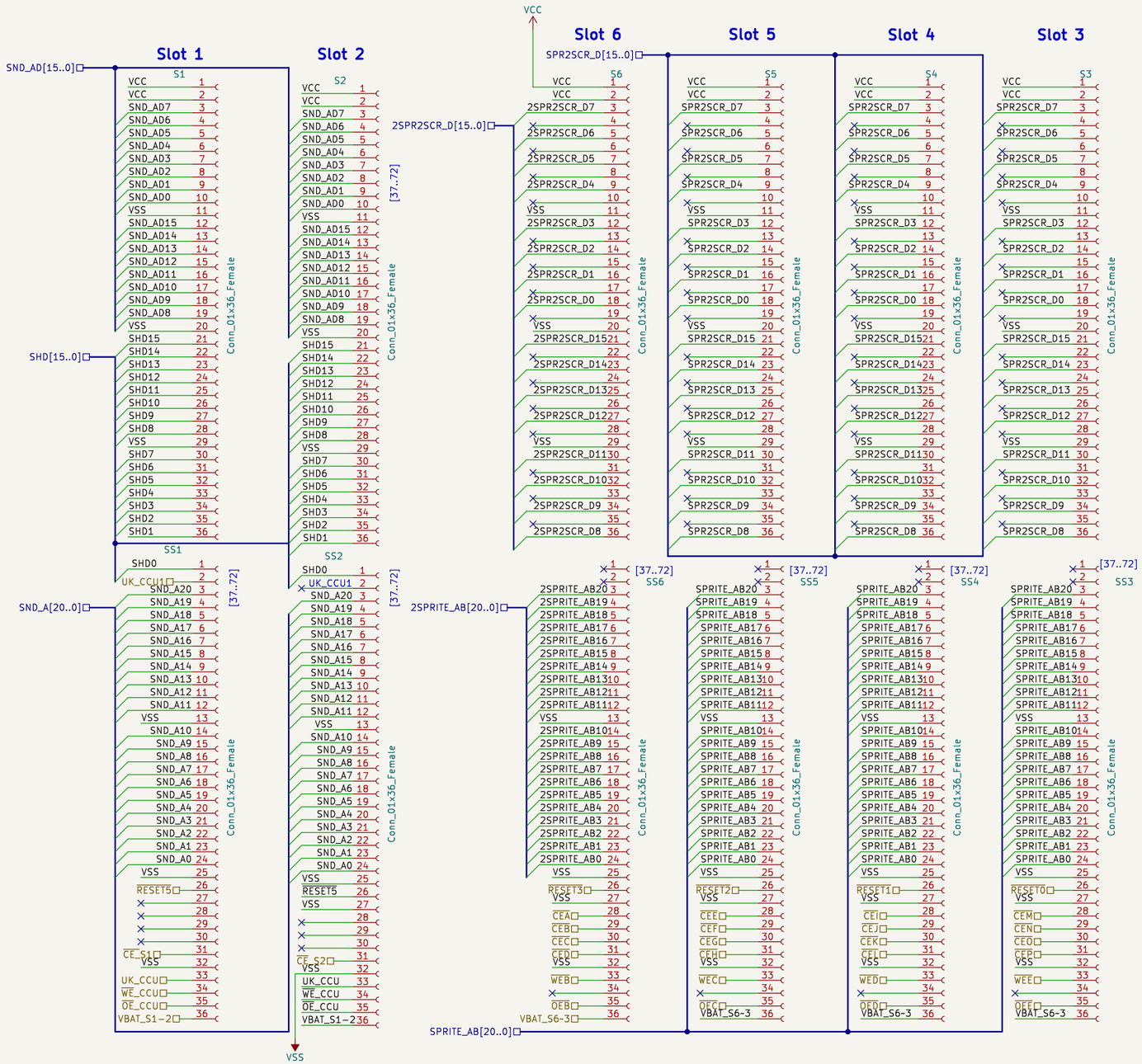

14/10/22-30/01/23
JOTEGO
JOTEGO

Sheet: /simms_flash/slots_female/
File: slots_females.kicad_sch

Title: CP SYSTEM III

Size: A3	Date: 14/10/22	Rev: José Tejada G.
KiCad E.D.A. 8.0.5		Id: 17/23

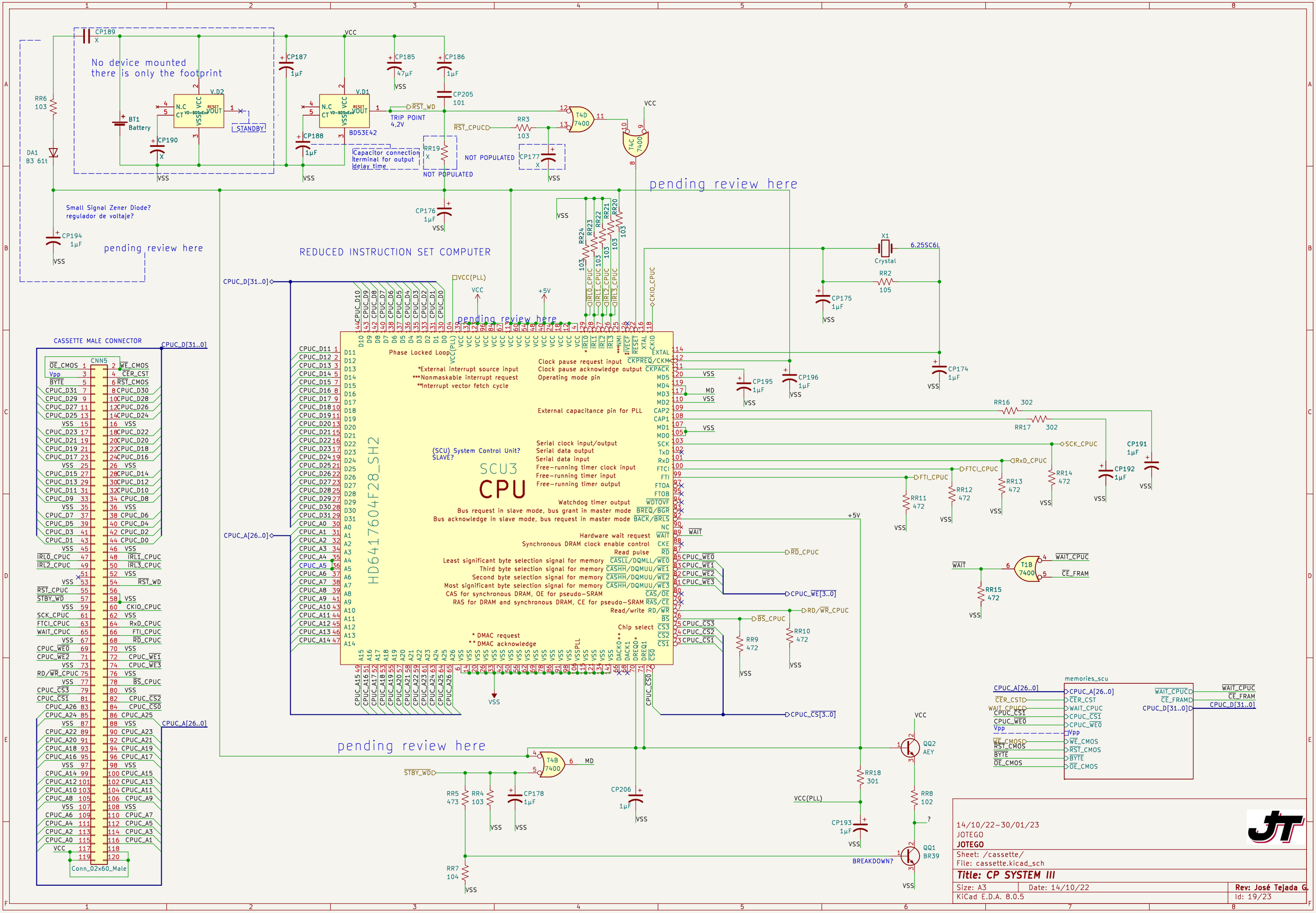
No device mounted
there is only the footprint
CP189
X
RR6
103
DA1
B3 61t
BT1
Battery
CP190
X
N.C
CT
VCC
RESET
VOUT
VSS
V.D2
STANDBY
CP187
1µF
CP188
1µF
V.D1
BD53E42
CP185
47µF
CP186
1µF
CP205
101
RST_WD
TRIP POINT
4.2V
Capacitor connection
terminal for output
delay time
RR19
X
NOT POPULATED
RST_CPUC
RR3
103
T4D
7400
CP177
X
T4C
7400
Small Signal Zener Diode?
regulador de voltaje?
CP194
1µF
pending review here
CP176
1µF
REDUCED INSTRUCTION SET COMPUTER
CPUC_D[31..0]
VCC(PLL)
+5V
RR24
RR23
RR22
RR21
RR20
103
CKIO_CPUC
X1
6.25SC6L
Crystal
RR2
105
CP175
1µF
CP174
1µF
CASSETTE MALE CONNECTOR
CNN5
Conn_02x60_Male
CPUC_A[26..0]
HD6417604F28_SH2
Phase Locked Loop
*External interrupt source input
***Nonmaskable interrupt request
**Interrupt vector fetch cycle
Clock pause request input
Clock pause acknowledge output
Operating mode pin
External capacitance pin for PLL
Serial clock input/output
Serial data output
Serial data input
Free-running timer clock input
Free-running timer input
Free-running timer output
(SCU) System Control Unit?
SLAVE?
SCU3
CPU
Watchdog timer output
Bus request in slave mode, bus grant in master mode
Bus acknowledge in slave mode, bus request in master mode
Hardware wait request
Synchronous DRAM clock enable control
Read pulse
Least significant byte selection signal for memory
Third byte selection signal for memory
Second byte selection signal for memory
Most significant byte selection signal for memory
CAS for synchronous DRAM, OE for pseudo-SRAM
RAS for DRAM and synchronous DRAM, CE for pseudo-SRAM
Read/write
Chip select
* DMAC request
** DMAC acknowledge
CPUC_A[26..0]
CPUC_D[31..0]
CPUC_WE[3..0]
CPUC_CS[3..0]
RD_CPUC
RD/WR_CPUC
BS_CPUC
WAIT
CP195
1µF
CP196
1µF
RR16
302
RR17
302
SCK_CPUC
RxD_CPUC
FTCI_CPUC
FTI_CPUC
RR11
472
RR12
472
RR13
472
RR14
472
CP191
1µF
CP192
1µF
T1B
7400
WAIT_CPUC
CE_FRAM
RR15
472
memories_scu
T4B
7400
STBY_WD
RR5
473
RR4
103
CP178
1µF
CP206
1µF
RR7
104
RR9
472
RR10
472
RR18
301
CP193
1µF
QQ2
AEY
RR8
102
QQ1
BR39
BREAKDOWN?
14/10/22-30/01/23
JOTEGO
JOTEGO
Sheet: /cassette/
File: cassette.kicad_sch
Title: CP SYSTEM III
Size: A3
Date: 14/10/22
Rev: José Tejada G.
KiCad E.D.A. 8.0.5
Id: 19/23

Simm 5

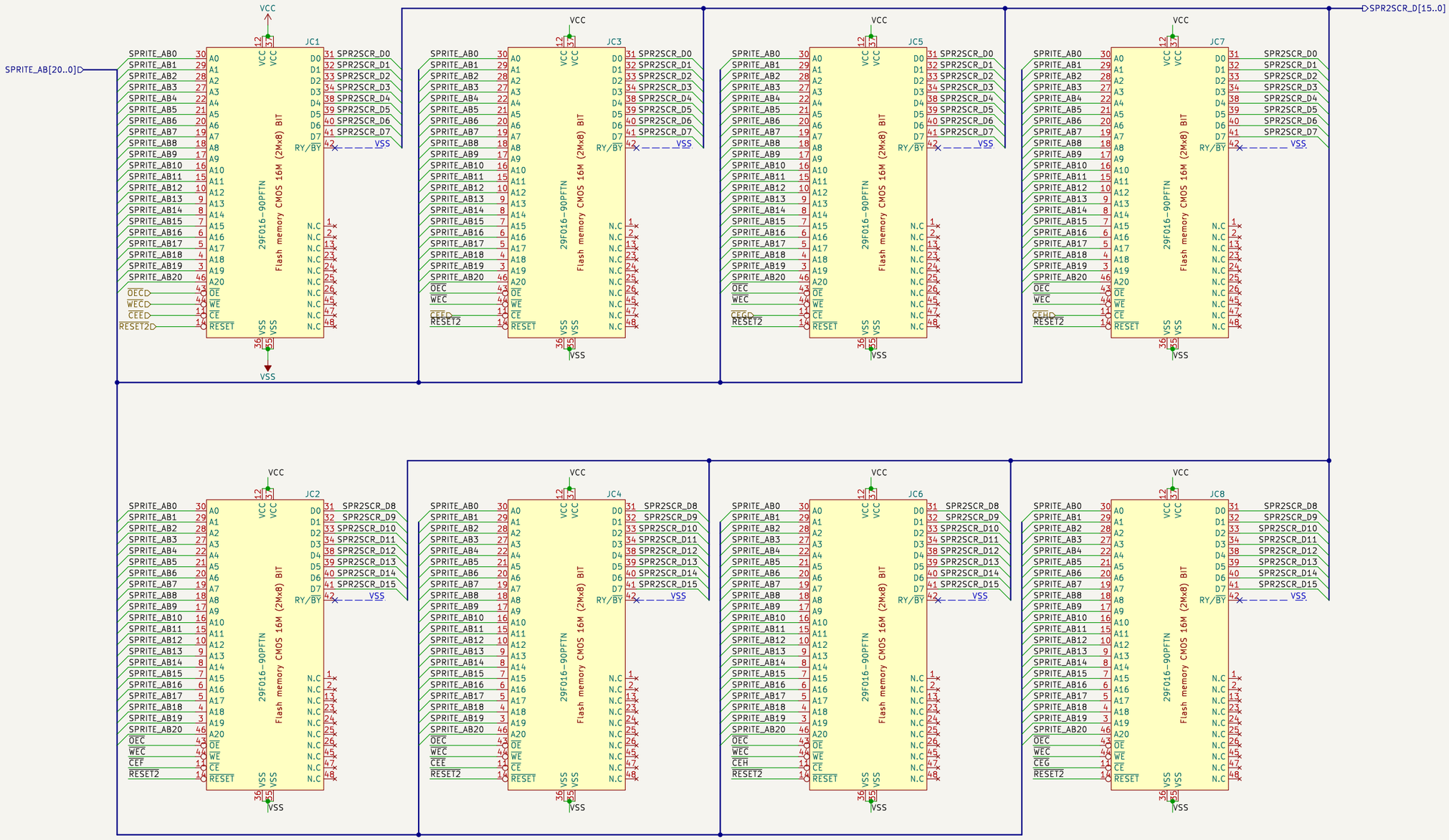

14/10/22-30/01/23
JOTEGO
JOTEGO

Sheet: /simms_flash/simm5/
File: simm5.kicad_sch

Title: CP SYSTEM III

Size: A3	Date: 14/10/22	**Rev: José Tejada G.**
KiCad E.D.A. 8.0.5		Id: 20/23

SIMM CONNECTOR

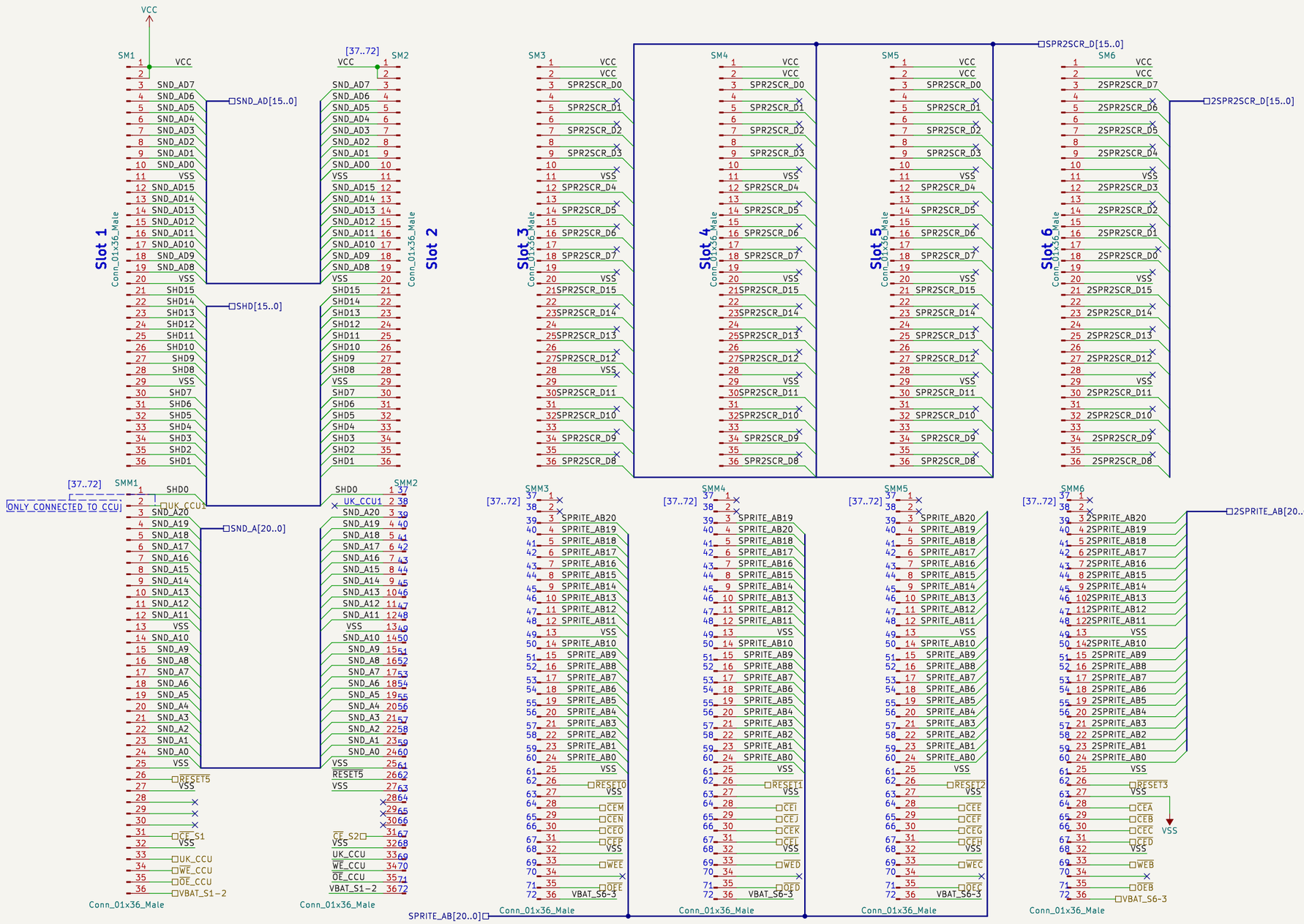

14/10/22-30/01/23
JOTEGO
JOTEGO

Sheet: /simms_flash/simm_connector/
File: simm_connector.kicad_sch

Title: CP SYSTEM III

Size: A3	Date: 14/10/22	**Rev: José Tejada G.**
KiCad E.D.A. 8.0.5		Id: 20/23

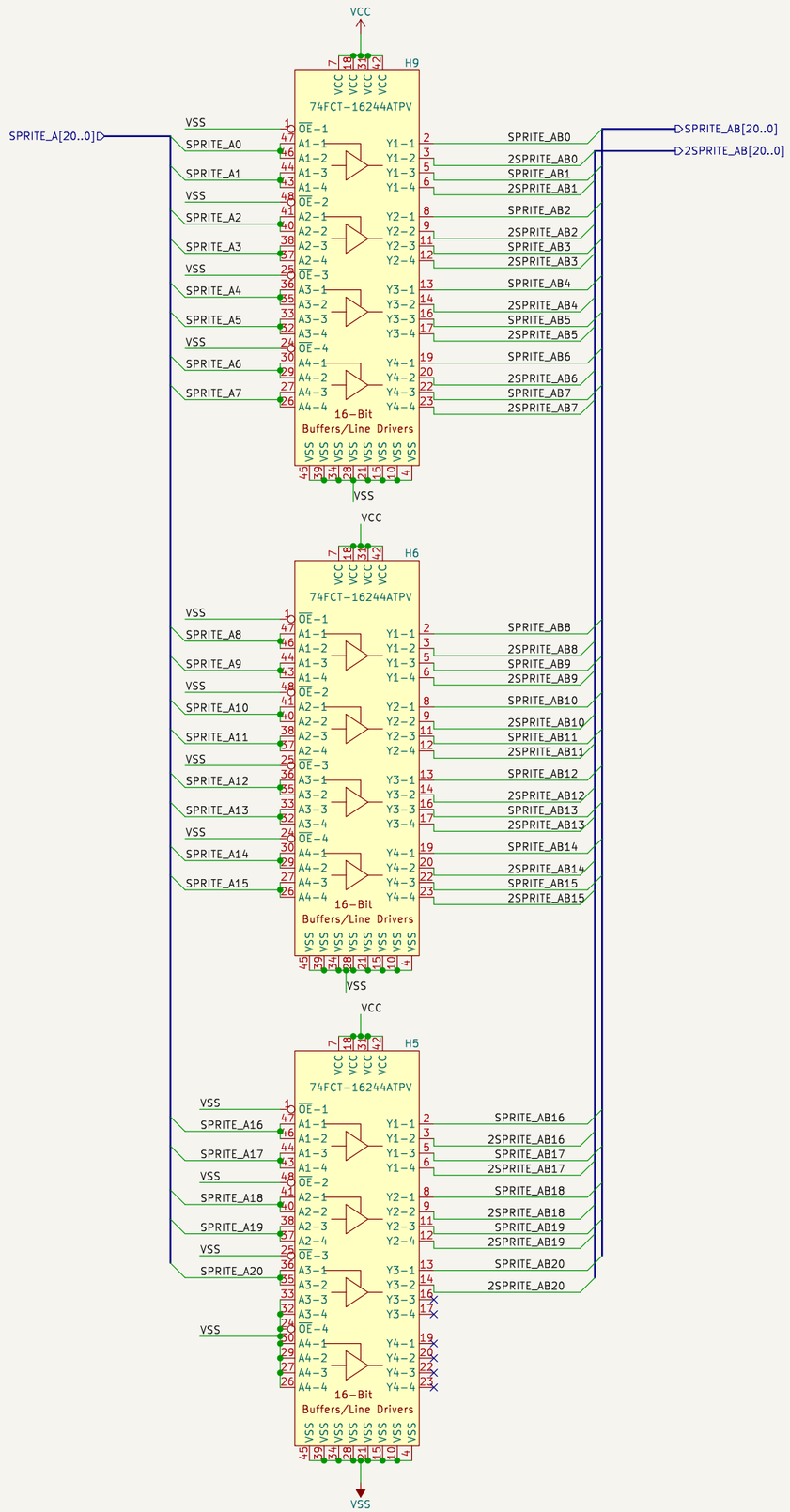

14/10/22-30/01/23
JOTEGO
JOTEGO

Sheet: /ppu/buffer_line_driver/
File: buffer_line_driver.kicad_sch

Title: CP SYSTEM III

Size: A3	Date: 14/10/22	**Rev: José Tejada G.**
KiCad E.D.A. 8.0.5		Id: 21/23

Simm 4

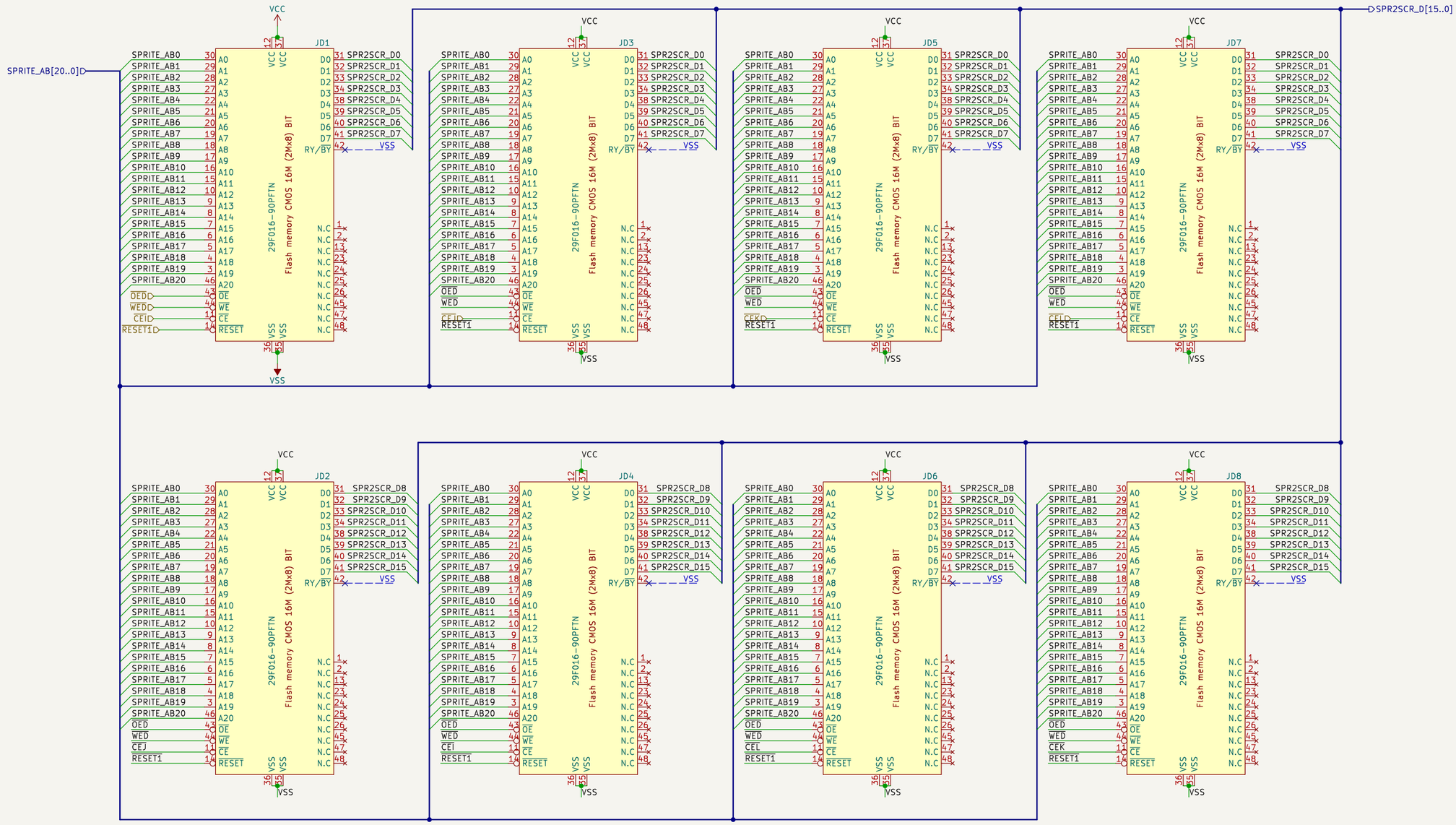

14/10/22-30/01/23
JOTEGO
JOTEGO

Sheet: /simms_flash/simm4/
File: simm4.kicad_sch

Title: CP SYSTEM III

Size: A3	Date: 14/10/22	**Rev: José Tejada G.**
KiCad E.D.A. 8.0.5		Id: 21/23

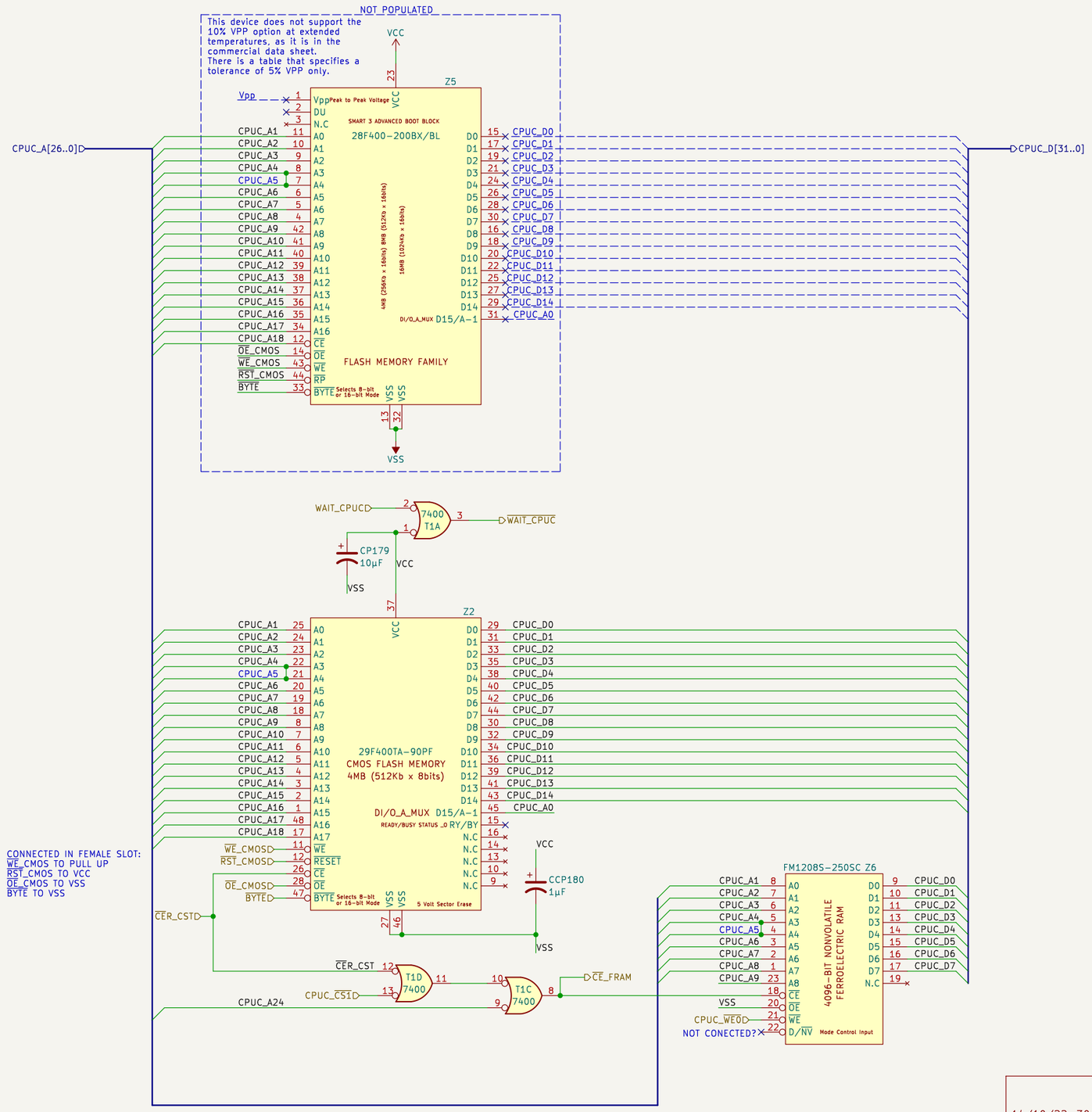

14/10/22-30/01/23
JOTEGO
JOTEGO

Sheet: /cassette/memories_scu/
File: memories_scu.kicad_sch

Title: CP SYSTEM III

Size: A3	Date: 14/10/22	Rev: José Tejada G.
KiCad E.D.A. 8.0.5		Id: 22/23

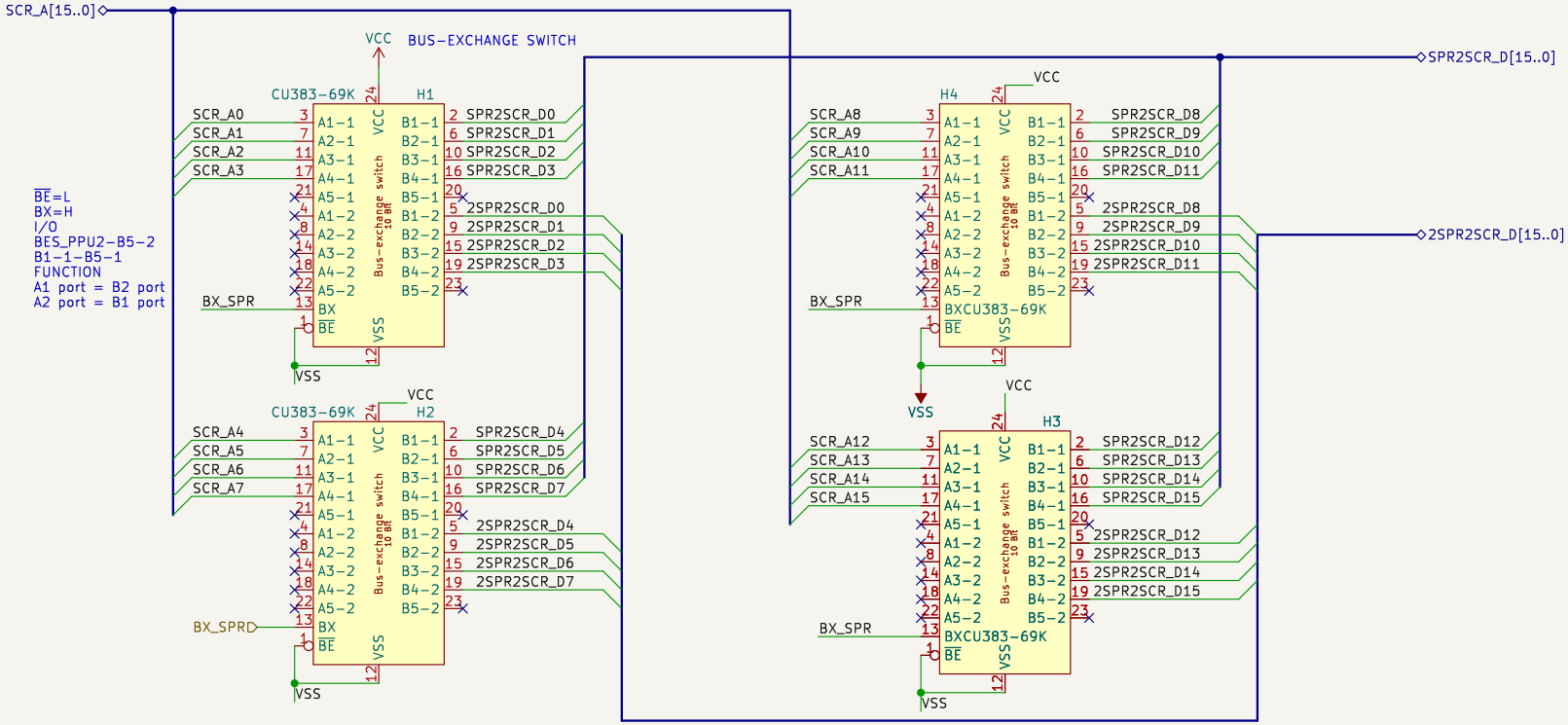

14/10/22-30/01/23
JOTEGO
JOTEGO

Sheet: /simms_flash/scroll/
File: scroll.kicad_sch

Title: CP SYSTEM III

Size: A4	Date: 14/10/22	**Rev: José Tejada G.**
KiCad E.D.A. 8.0.5		Id: 23/23