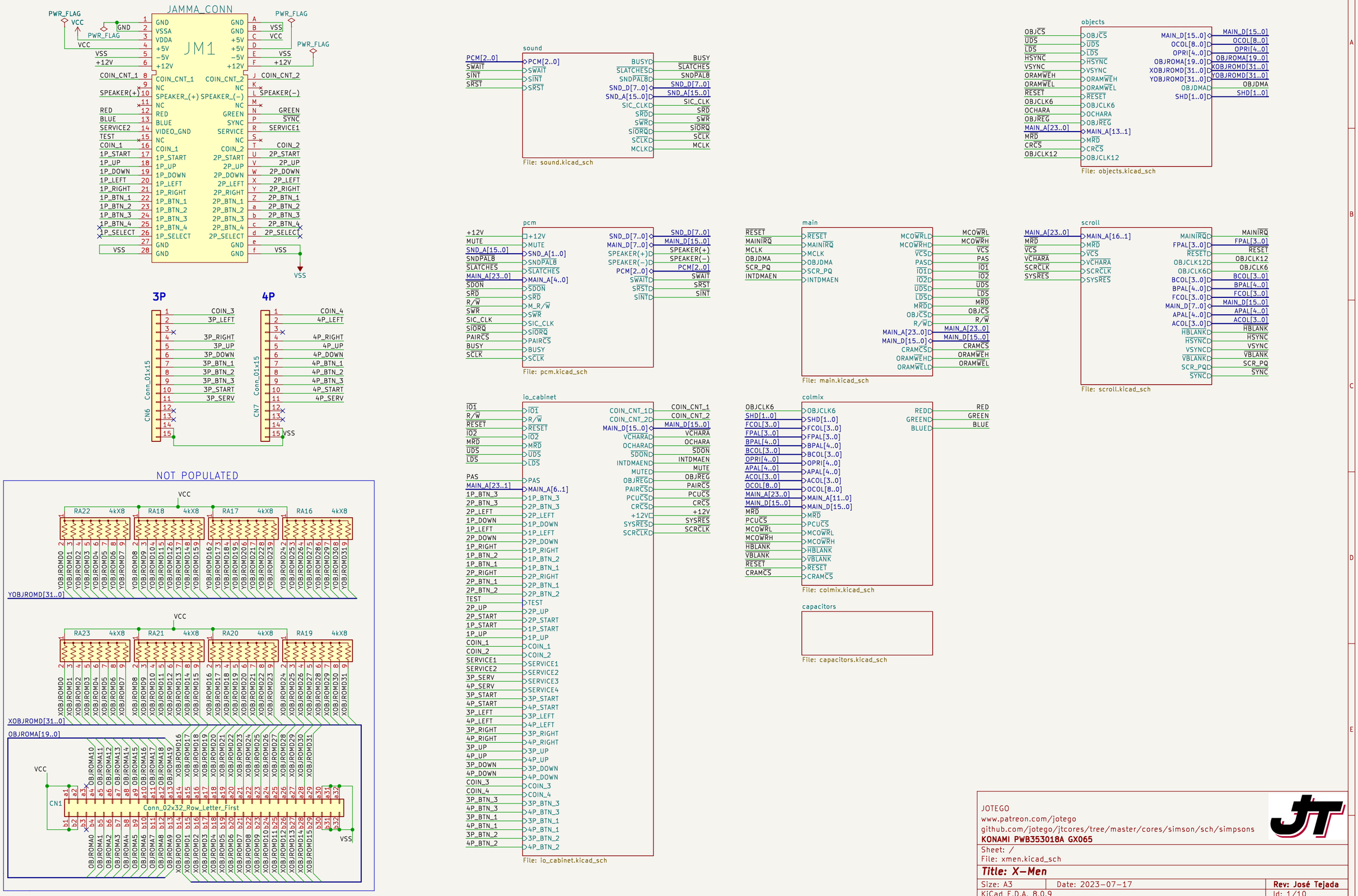

JOTEGO
www.patreon.com/jotego
github.com/jotego/jtcores/tree/master/cores/simson/sch/simpsons
KONAMI PWB353018A GX065

Sheet: /
File: xmen.kicad_sch

Title: X-Men

Size: A3	Date: 2023-07-17	**Rev: José Tejada**
KiCad E.D.A. 8.0.9		Id: 1/10

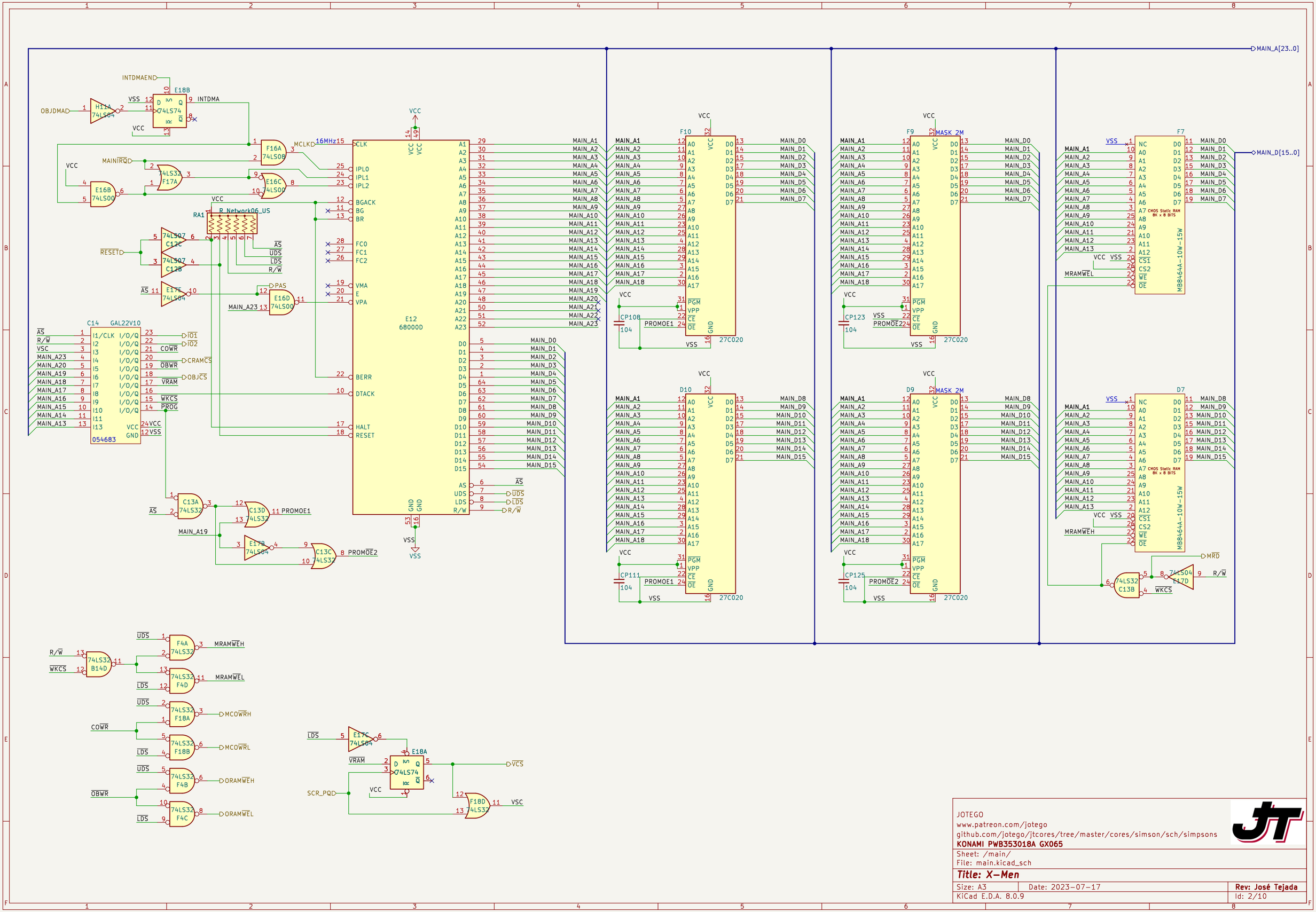

JOTEGO
www.patreon.com/jotego
github.com/jotego/jtcores/tree/master/cores/simson/sch/simpsons
KONAMI PWB353018A GX065

Sheet: /main/
File: main.kicad_sch

Title: X-Men

Size: A3	Date: 2023-07-17	**Rev: José Tejada**
KiCad E.D.A. 8.0.9		Id: 2/10

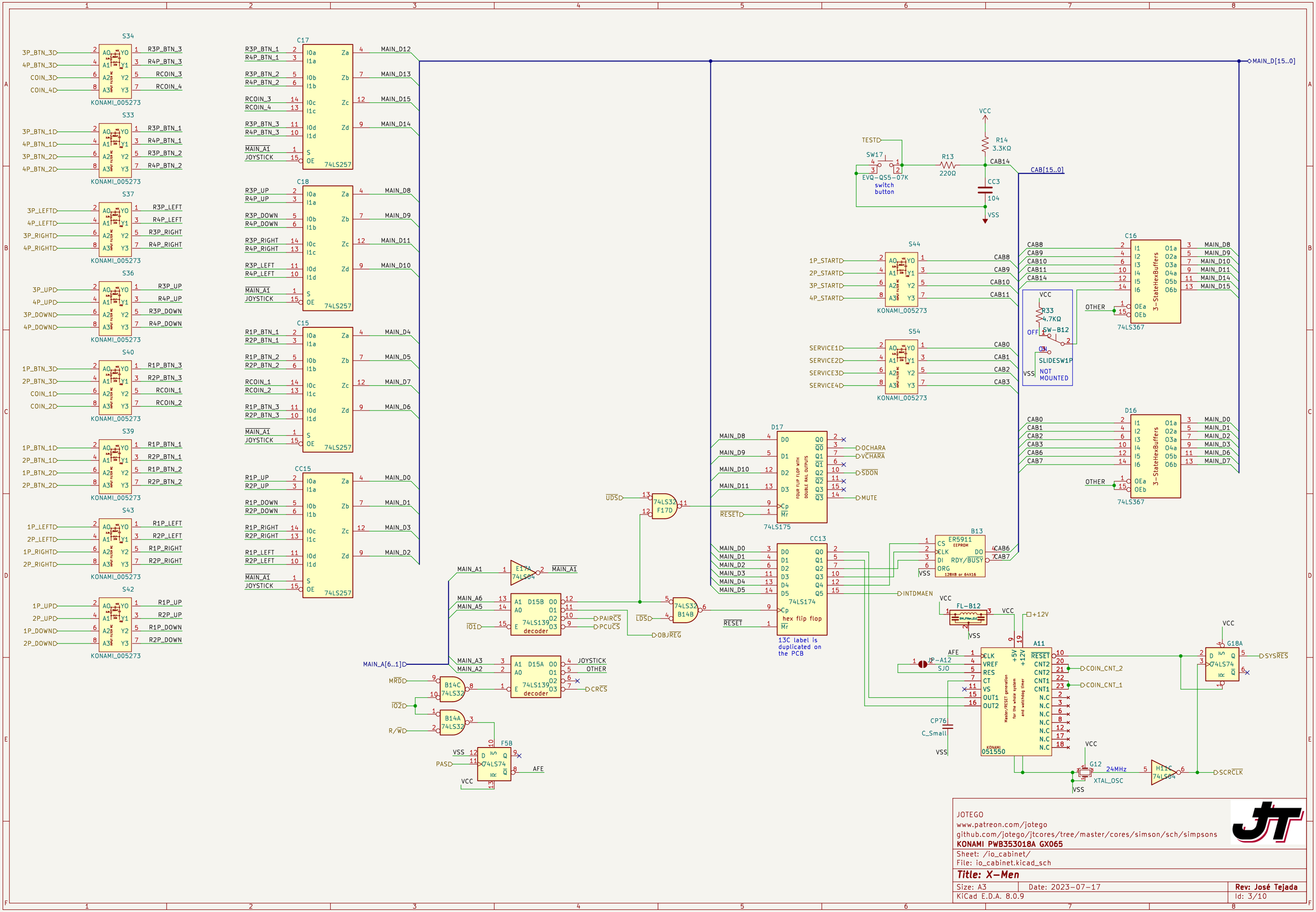
S34
3P_BTN_3
4P_BTN_3
COIN_3
COIN_4
R3P_BTN_3
R4P_BTN_3
RCOIN_3
RCOIN_4
KONAMI_005273
S33
3P_BTN_1
4P_BTN_1
3P_BTN_2
4P_BTN_2
R3P_BTN_1
R4P_BTN_1
R3P_BTN_2
R4P_BTN_2
S37
3P_LEFT
4P_LEFT
3P_RIGHT
4P_RIGHT
R3P_LEFT
R4P_LEFT
R3P_RIGHT
R4P_RIGHT
S36
3P_UP
4P_UP
3P_DOWN
4P_DOWN
R3P_UP
R4P_UP
R3P_DOWN
R4P_DOWN
S40
1P_BTN_3
2P_BTN_3
COIN_1
COIN_2
R1P_BTN_3
R2P_BTN_3
RCOIN_1
RCOIN_2
S39
1P_BTN_1
2P_BTN_1
1P_BTN_2
2P_BTN_2
R1P_BTN_1
R2P_BTN_1
R1P_BTN_2
R2P_BTN_2
S43
1P_LEFT
2P_LEFT
1P_RIGHT
2P_RIGHT
R1P_LEFT
R2P_LEFT
R1P_RIGHT
R2P_RIGHT
S42
1P_UP
2P_UP
1P_DOWN
2P_DOWN
R1P_UP
R2P_UP
R1P_DOWN
R2P_DOWN
C17
74LS257
MAIN_D12
MAIN_D13
MAIN_D15
MAIN_D14
C18
74LS257
MAIN_D8
MAIN_D9
MAIN_D11
MAIN_D10
C15
74LS257
MAIN_D4
MAIN_D5
MAIN_D7
MAIN_D6
CC15
74LS257
MAIN_D0
MAIN_D1
MAIN_D3
MAIN_D2
MAIN_A1
JOYSTICK
MAIN_D[15..0]
TEST
SW17
EVQ-QS5-07K
switch button
R13
220Ω
R14
3.3KΩ
VCC
CAB14
CC3
104
VSS
CAB[15..0]
S44
1P_START
2P_START
3P_START
4P_START
CAB8
CAB9
CAB10
CAB11
C16
3-StateHexBuffers
74LS367
OTHER
R33
4.7KΩ
SW-B12
SLIDESW1P
NOT MOUNTED
S54
SERVICE1
SERVICE2
SERVICE3
SERVICE4
CAB0
CAB1
CAB2
CAB3
D16
CAB6
CAB7
D17
74LS175
FOUR FLIP FLOP WITH DOUBLE RAIL OUTPUTS
OCHARA
VCHARA
SDON
MUTE
RESET
UDS
74LS32 F17D
CC13
74LS174
hex flip flop
13C label is duplicated on the PCB
INTDMAEN
B13
ER5911 EEPROM
128X8 or 64X16
CAB6
CAB7
E17A 74LS04
A1 D15B O0 O1 O2 O3
A0
E
74LS139 decoder
PAIRCS
PCUCS
LDS
OBJREG
B14B
A1 D15A O0 O1 O2 O3
JOYSTICK
OTHER
CRCS
MAIN_A[6..1]
MAIN_A6
MAIN_A5
MAIN_A3
MAIN_A2
IO1
MRD
IO2
R/W
B14C 74LS32
B14A 74LS32
F5B
74LS74
PAS
AFE
FL-B12
+12V
A11
CLK
VREF
RES
CT
VS
OUT1
OUT2
RESET
CNT2
CNT1
N.C
051550
Master/RESET generation for the whole system and watchdog timer
CP76
C_Small
JP-A12
SJO
COIN_CNT_2
COIN_CNT_1
G18A
SYSRES
G12
24MHz
XTAL_OSC
H11C 74LS04
SCRCLK
JOTEGO
www.patreon.com/jotego
github.com/jotego/jtcores/tree/master/cores/simson/sch/simpsons
KONAMI PWB353018A GX065
Sheet: /io_cabinet/
File: io_cabinet.kicad_sch
Title: X-Men
Size: A3
Date: 2023-07-17
Rev: José Tejada
KiCad E.D.A. 8.0.9
Id: 3/10

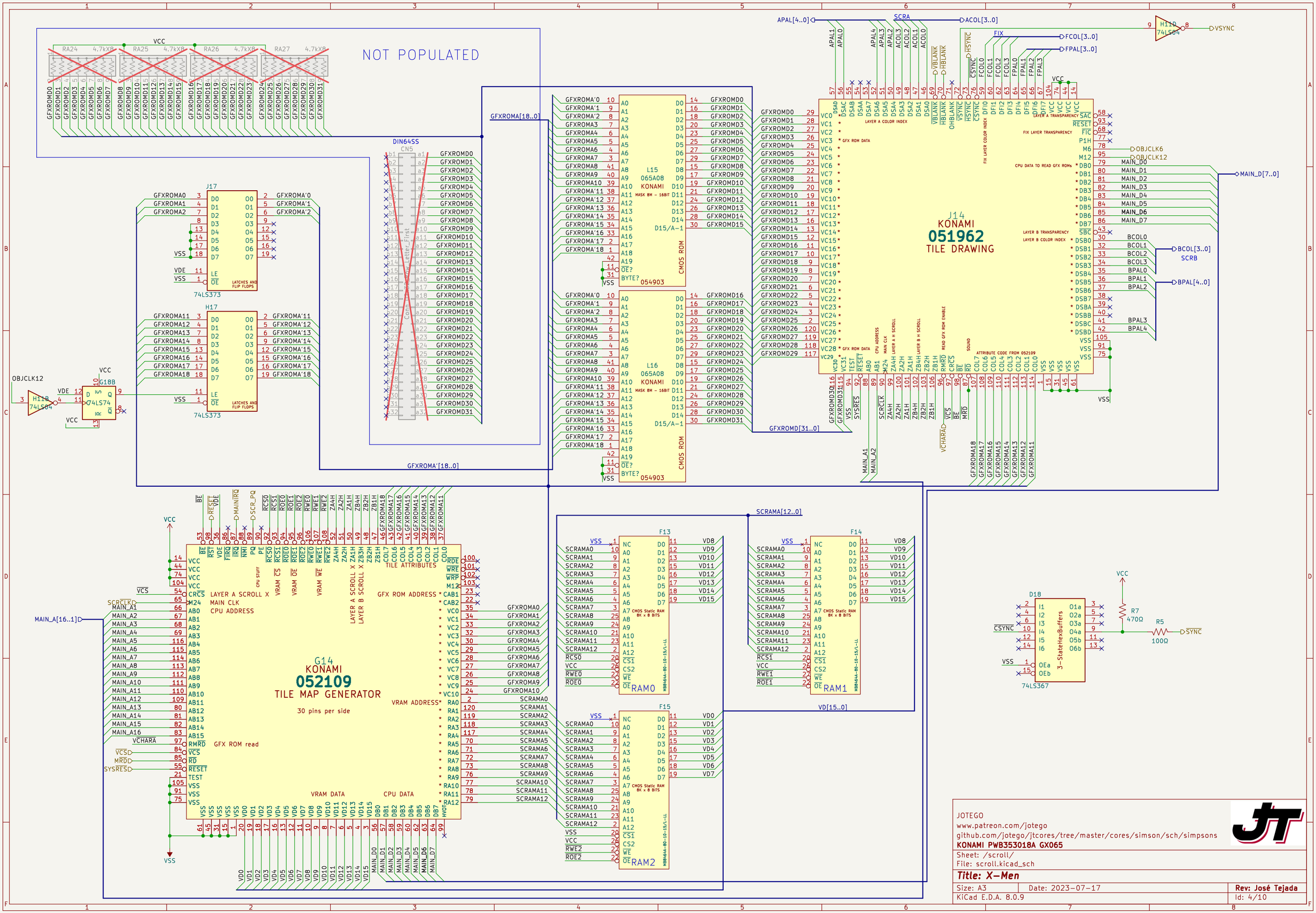
NOT POPULATED
RA24 4.7kX8
RA25 4.7kX8
RA26 4.7kX8
RA27 4.7kX8
VCC
DIN64SS
CN5
J17
74LS373
H17
74LS373
OBJCLK12
H11B
74LS04
G18B
74LS74
L15
065A08
KONAMI
MASK BM - 16BIT
CMOS ROM
054903
L16
065A08
KONAMI
MASK BM - 16BIT
CMOS ROM
054903
GFXROMA[18..0]
GFXROMA'[18..0]
GFXROMD[31..0]
APAL[4..0]
SCRA
ACOL[3..0]
FIX
FCOL[3..0]
FPAL[3..0]
H11D
74LS04
VSYNC
MAIN_D[7..0]
BCOL[3..0]
SCRB
BPAL[4..0]
J14
KONAMI
051962
TILE DRAWING
LAYER A COLOR INDEX
GFX ROM DATA
LAYER A TRANSPARENCY
FIX LAYER TRANSPARENCY
FIX LAYER COLOR INDEX
CPU DATA TO READ GFX ROMS
LAYER B TRANSPARENCY
LAYER B COLOR INDEX
ATTRIBUTE CODE FROM 052109
OBJCLK6
OBJCLK12
MAIN_D0
MAIN_D1
MAIN_D2
MAIN_D3
MAIN_D4
MAIN_D5
MAIN_D6
MAIN_D7
BCOL0
BCOL1
BCOL2
BCOL3
BPAL0
BPAL1
BPAL2
BPAL3
BPAL4
SCRAMA[12..0]
F13
RAM0
F14
RAM1
F15
RAM2
VD[15..0]
G14
KONAMI
052109
TILE MAP GENERATOR
30 pins per side
LAYER A SCROLL X
MAIN CLK
CPU ADDRESS
TILE ATTRIBUTES
GFX ROM ADDRESS
VRAM ADDRESS
GFX ROM read
VRAM DATA
CPU DATA
MAIN_A[16..1]
D18
74LS367
3-StateHexBuffers
R7
470Ω
R5
100Ω
SYNC
JOTEGO
www.patreon.com/jotego
github.com/jotego/jtcores/tree/master/cores/simson/sch/simpsons
KONAMI PWB353018A GX065
Sheet: /scroll/
File: scroll.kicad_sch
Title: X-Men
Size: A3
Date: 2023-07-17
Rev: José Tejada
KiCad E.D.A. 8.0.9
Id: 4/10

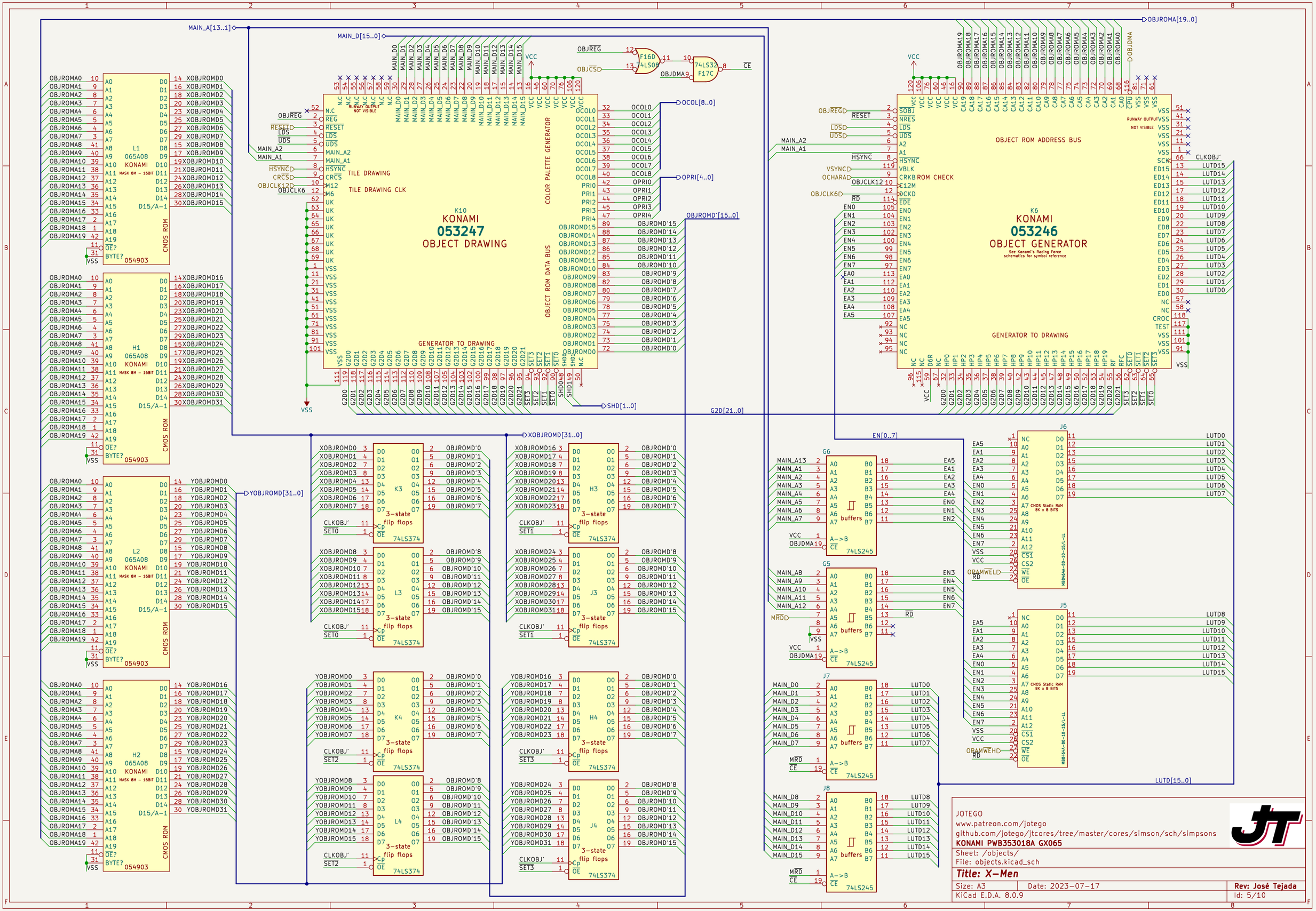

JOTEGO
www.patreon.com/jotego
github.com/jotego/jtcores/tree/master/cores/simson/sch/simpsons
KONAMI PWB353018A GX065

Sheet: /objects/
File: objects.kicad_sch

Title: X-Men

Size: A3	Date: 2023-07-17	**Rev: José Tejada**
KiCad E.D.A. 8.0.9		Id: 5/10

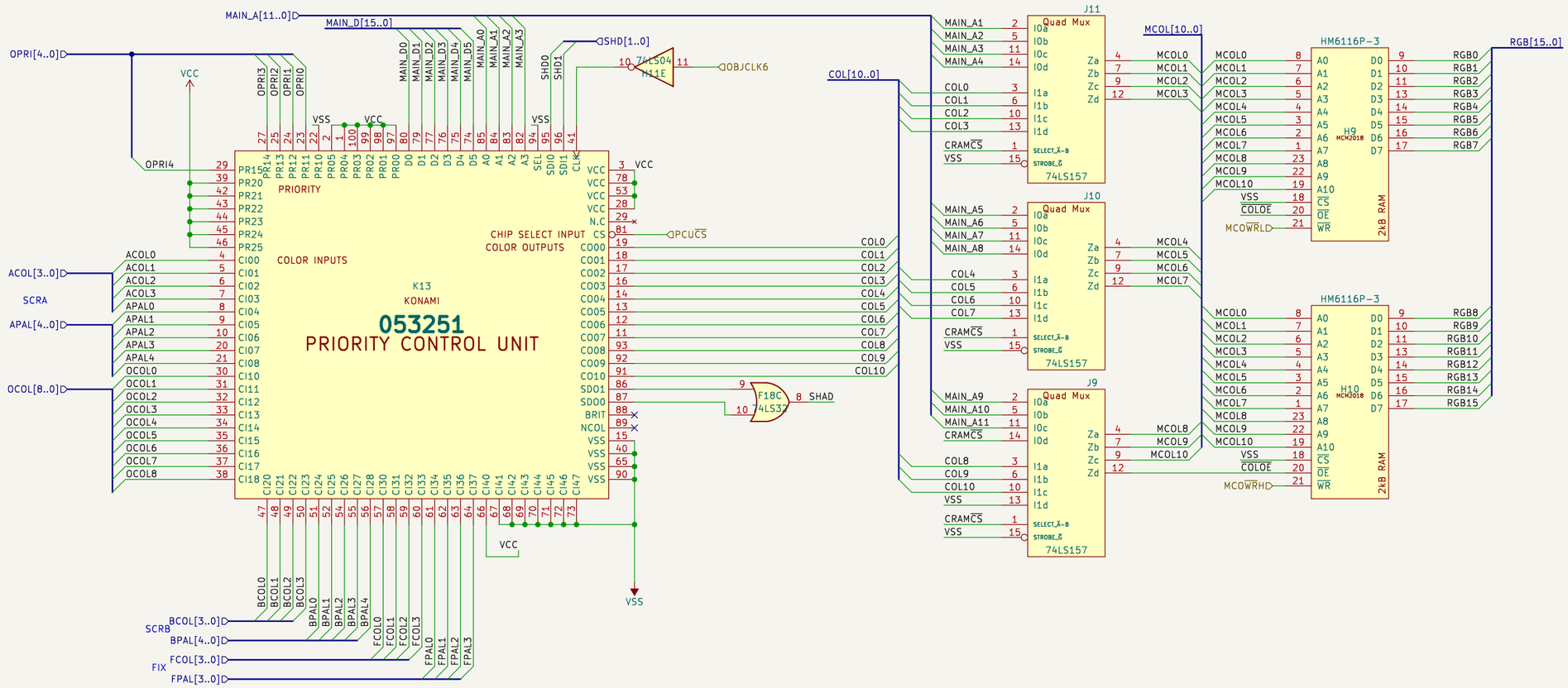

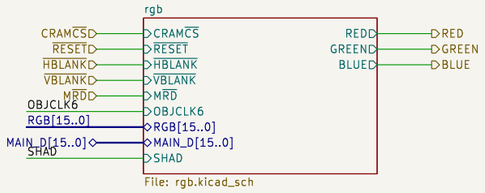

JOTEGO
www.patreon.com/jotego
github.com/jotego/jtcores/tree/master/cores/simson/sch/simpsons
KONAMI PWB353018A GX065

Sheet: /colmix/
File: colmix.kicad_sch

Title: X-Men

Size: A3	Date: 2023-07-17	**Rev: José Tejada**
KiCad E.D.A. 8.0.9		Id: 6/10

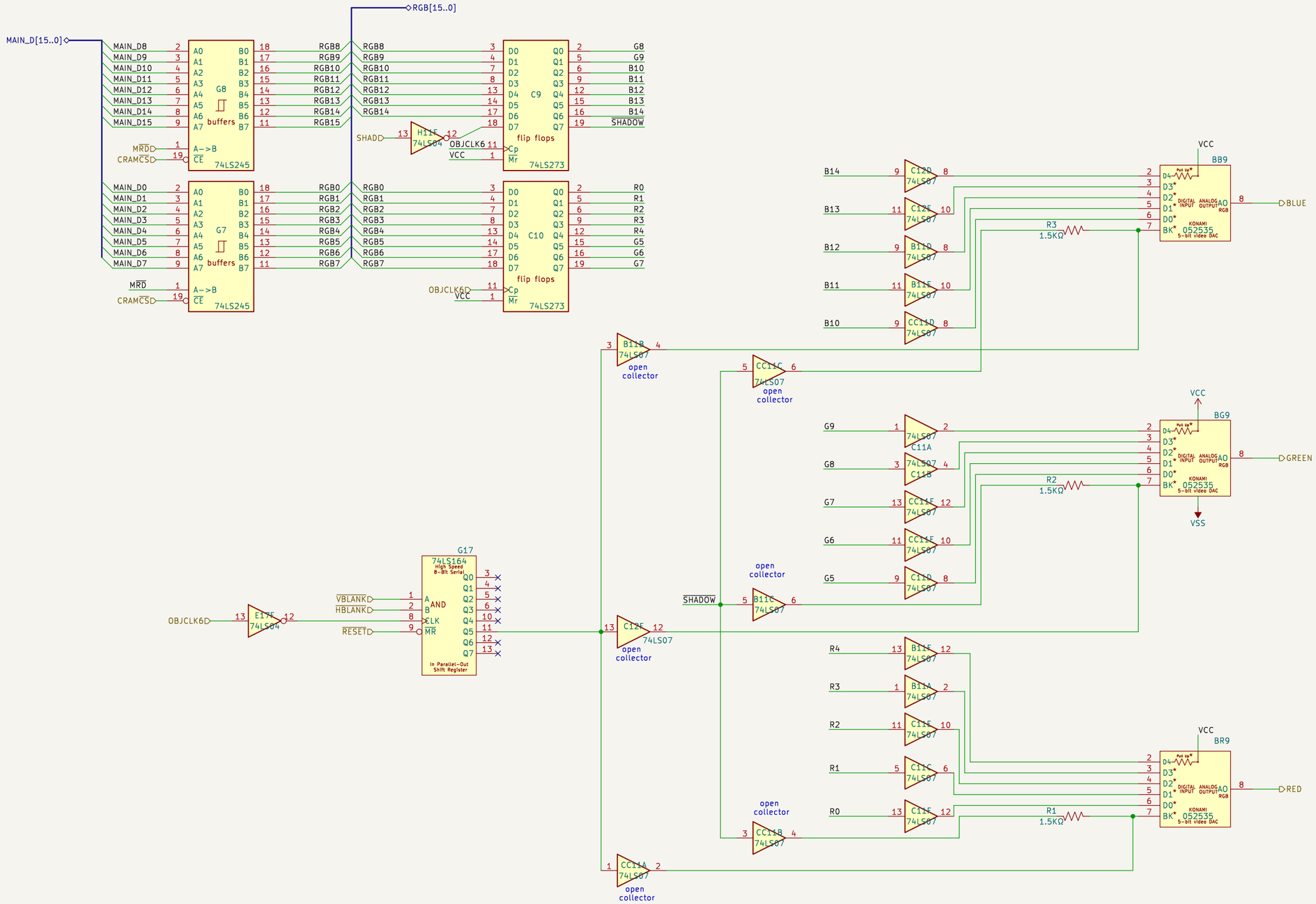

JOTEGO
www.patreon.com/jotego
github.com/jotego/jtcores/tree/master/cores/simson/sch/simpsons
KONAMI PWB353018A GX065

Sheet: /colmix/rgb/
File: rgb.kicad_sch

Title: X–Men

Size: A3	Date: 2023–07–17	**Rev: José Tejada**
KiCad E.D.A. 8.0.9		Id: 7/10

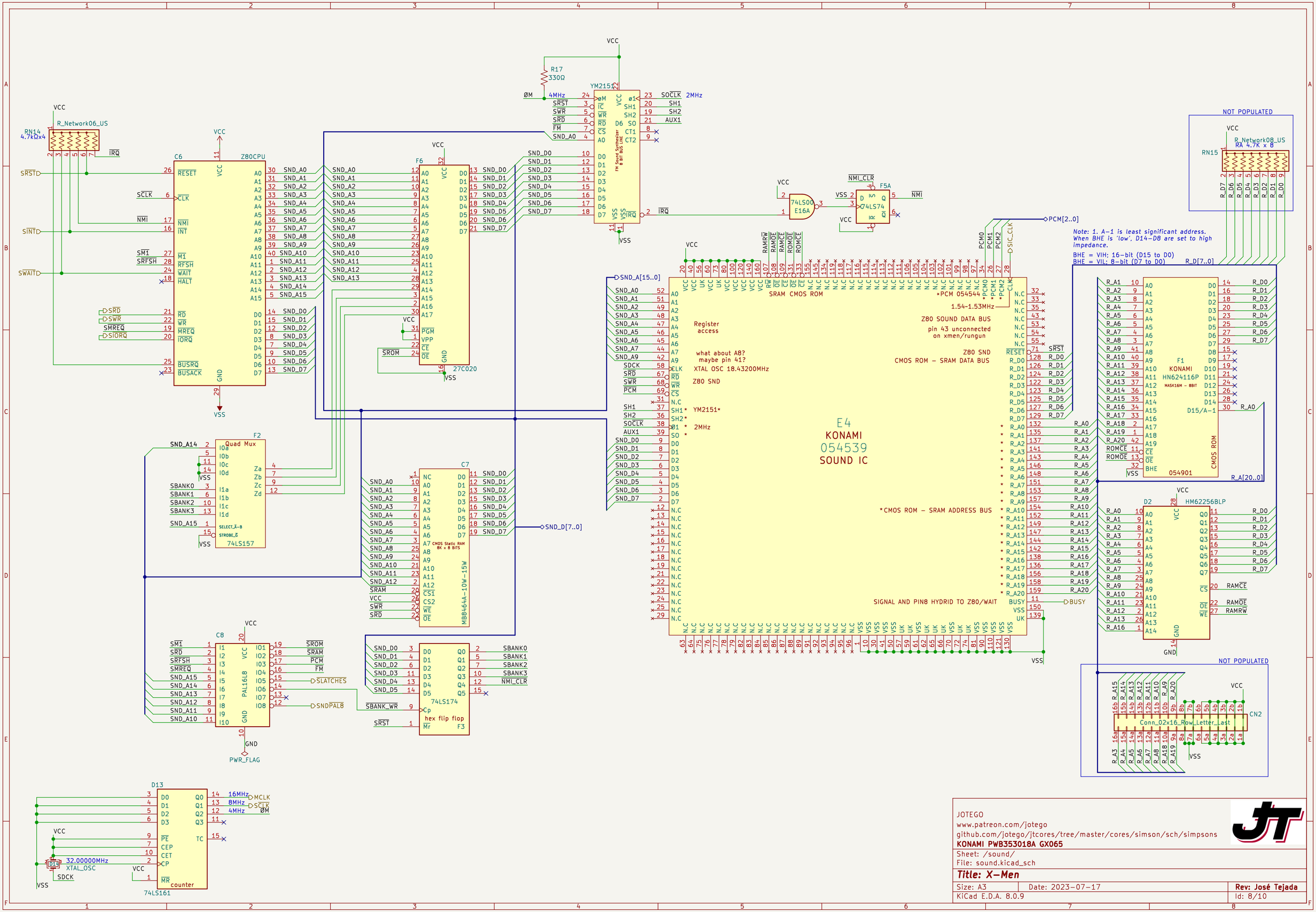
C6 Z80CPU
RESET CLK NMI INT M1 RFSH WAIT HALT RD WR MREQ IORQ BUSRQ BUSACK
A0 A1 A2 A3 A4 A5 A6 A7 A8 A9 A10 A11 A12 A13 A14 A15
D0 D1 D2 D3 D4 D5 D6 D7
VCC GND VSS
RN14 4.7kΩx4 R_Network06_US
SRST SCLK NMI SINT SM1 SRFSH SWAIT SRD SWR SMREQ SIORQ
IRQ
F6 27C020
A0 A1 A2 A3 A4 A5 A6 A7 A8 A9 A10 A11 A12 A13 A14 A15 A16 A17
PGM VPP CE OE
SROM
D0 D1 D2 D3 D4 D5 D6 D7
SND_A0 SND_A1 SND_A2 SND_A3 SND_A4 SND_A5 SND_A6 SND_A7 SND_A8 SND_A9 SND_A10 SND_A11 SND_A12 SND_A13 SND_A14 SND_A15
SND_D0 SND_D1 SND_D2 SND_D3 SND_D4 SND_D5 SND_D6 SND_D7
YM2151
R17 330Ω
ØM 4MHz SRST SWR SRD FM SND_A0
IC WR RD CS A0 D0 D1 D2 D3 D4 D5 D6 D7 VSS VSS IRQ
FM Sound Synthesizer 8 BIT BUS LINE
VCC Ø1 SH1 SH2 D6 SO CT1 CT2
SOCLK 2MHz SH1 SH2 AUX1
74LS00 E16A
NMI_CLR F5A 74LS74 D Q CK PR
NMI
PCM[2..0]
PCM0 PCM1 PCM2 SIC_CLK
Note: 1. A-1 is least significant address.
When BHE is 'low', D14-D8 are set to high impedance.
BHE = VIH; 16-bit (D15 to D0)
BHE = VIL; 8-bit (D7 to D0)
R_D[7..0]
NOT POPULATED
RN15 R_Network08_US RA 4.7K x 8
R_D7 R_D6 R_D5 R_D4 R_D3 R_D2 R_D1 R_D0
SND_A[15..0]
SRAM CMOS ROM
Register access
what about A8? maybe pin 41?
XTAL OSC 18.43200MHz
Z80 SND
YM2151*
2MHz
E4
KONAMI
054539
SOUND IC
*PCM 054544
1.54-1.53MHz
Z80 SOUND DATA BUS
pin 43 unconnected on xmen/rungun
Z80 SND CMOS ROM - SRAM DATA BUS
*CMOS ROM - SRAM ADDRESS BUS
SIGNAL AND PIN8 HYDRID TO Z80/WAIT
BUSY
SRST
R_A[20..0]
F1 KONAMI HN624116P MASK16M - 8BIT
D15/A-1 CMOS ROM 054901
ROMCE ROMOE BHE
D2 HM62256BLP
RAMCE RAMOE RAMRW
F2 Quad Mux 74LS157
SBANK0 SBANK1 SBANK2 SBANK3
SELECT_A-B STROBE_G
C7 MB8464A-10W-15W
CMOS Static RAM 8K x 8 BITS
SRAM
SND_D[7..0]
C8 PAL16L8
SM1 SRD SRFSH SMREQ
SROM SRAM PCM FM SLATCHES SNDPAL8
PWR_FLAG
F3 74LS174 hex flip flop
SBANK_WR
SBANK0 SBANK1 SBANK2 SBANK3 NMI_CLR
D13 74LS161 counter
16MHz 8MHz 4MHz MCLK SCLK ØM
32.00000MHz XTAL_OSC
SDCK
NOT POPULATED
CN2 Conn_02x16_Row_Letter_Last
JOTEGO
www.patreon.com/jotego
github.com/jotego/jtcores/tree/master/cores/simson/sch/simpsons
KONAMI PWB353018A GX065
Sheet: /sound/
File: sound.kicad_sch
Title: X-Men
Size: A3
Date: 2023-07-17
Rev: José Tejada
KiCad E.D.A. 8.0.9
Id: 8/10

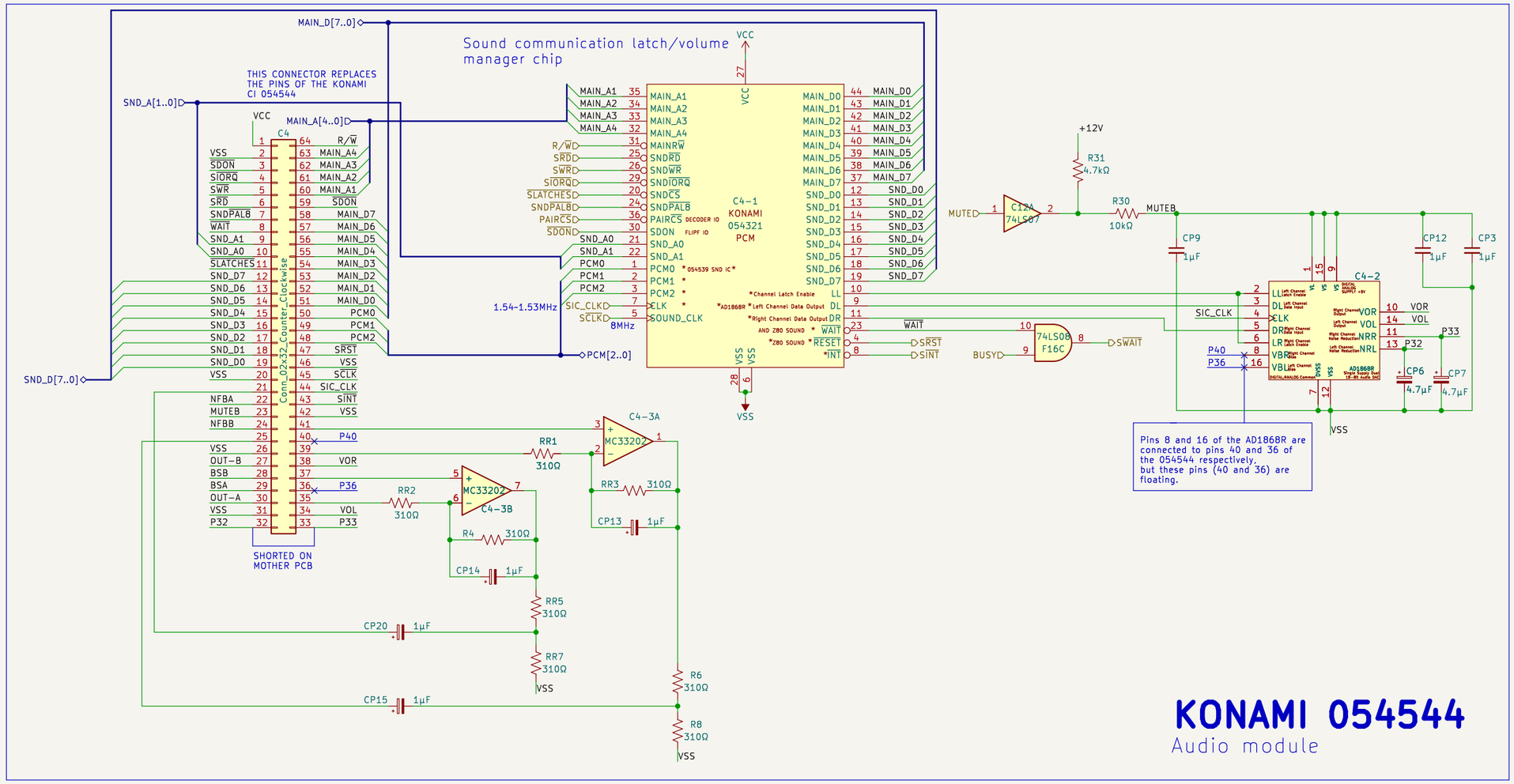

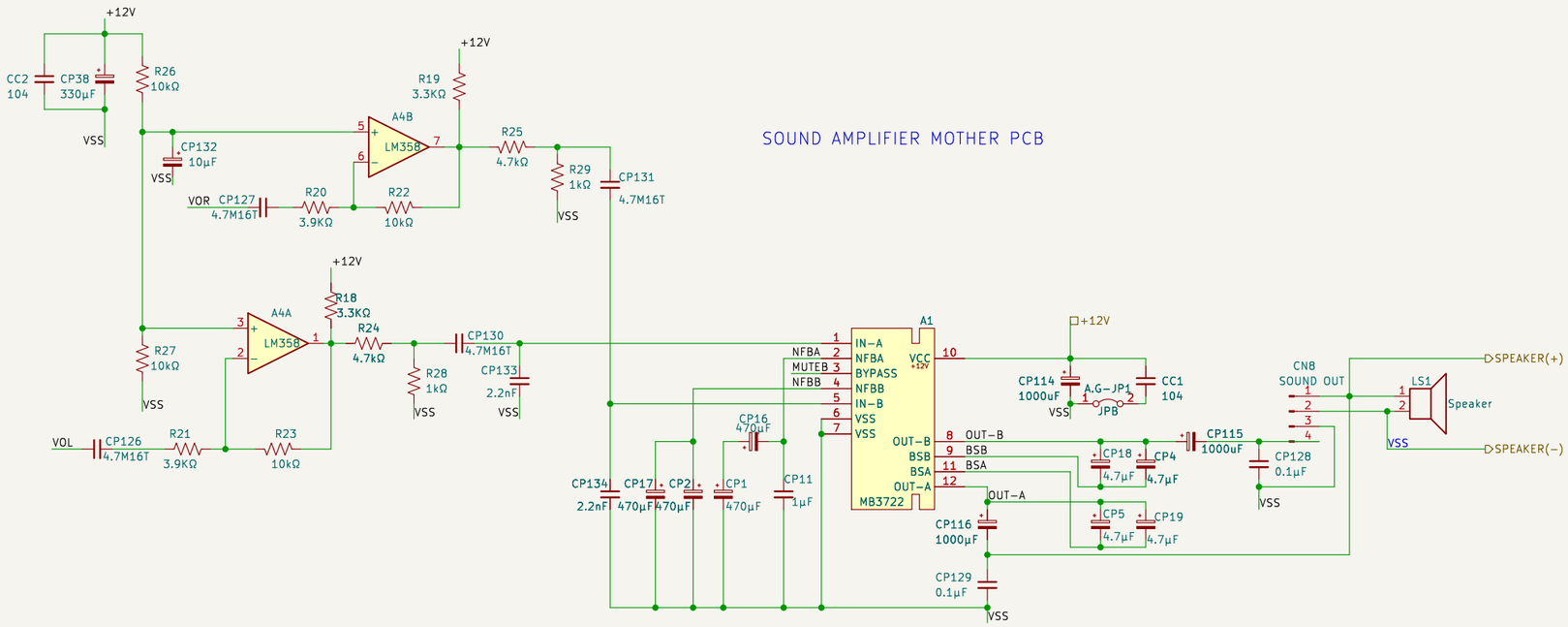

JOTEGO
www.patreon.com/jotego
github.com/jotego/jtcores/tree/master/cores/simson/sch/simpsons
KONAMI PWB353018A GX065

Sheet: /pcm/
File: pcm.kicad_sch

Title: X-Men

Size: A3	Date: 2023-07-17	**Rev: José Tejada**
KiCad E.D.A. 8.0.9		Id: 8/10

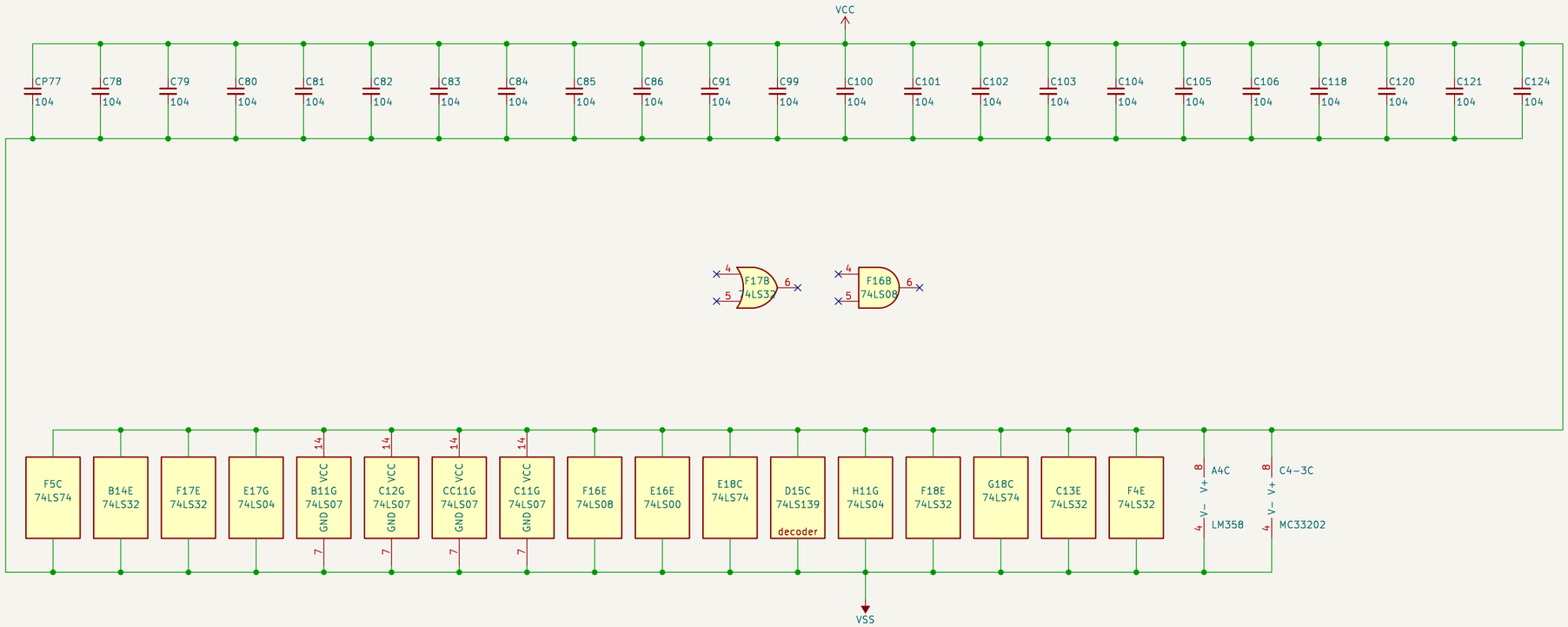

JOTEGO
www.patreon.com/jotego
github.com/jotego/jtcores/tree/master/cores/simson/sch/simpsons
KONAMI PWB353018A GX065

Sheet: /capacitors/
File: capacitors.kicad_sch

Title: X-Men

Size: A3	Date: 2023-07-17	**Rev: José Tejada**
KiCad E.D.A. 8.0.9		Id: 9/10