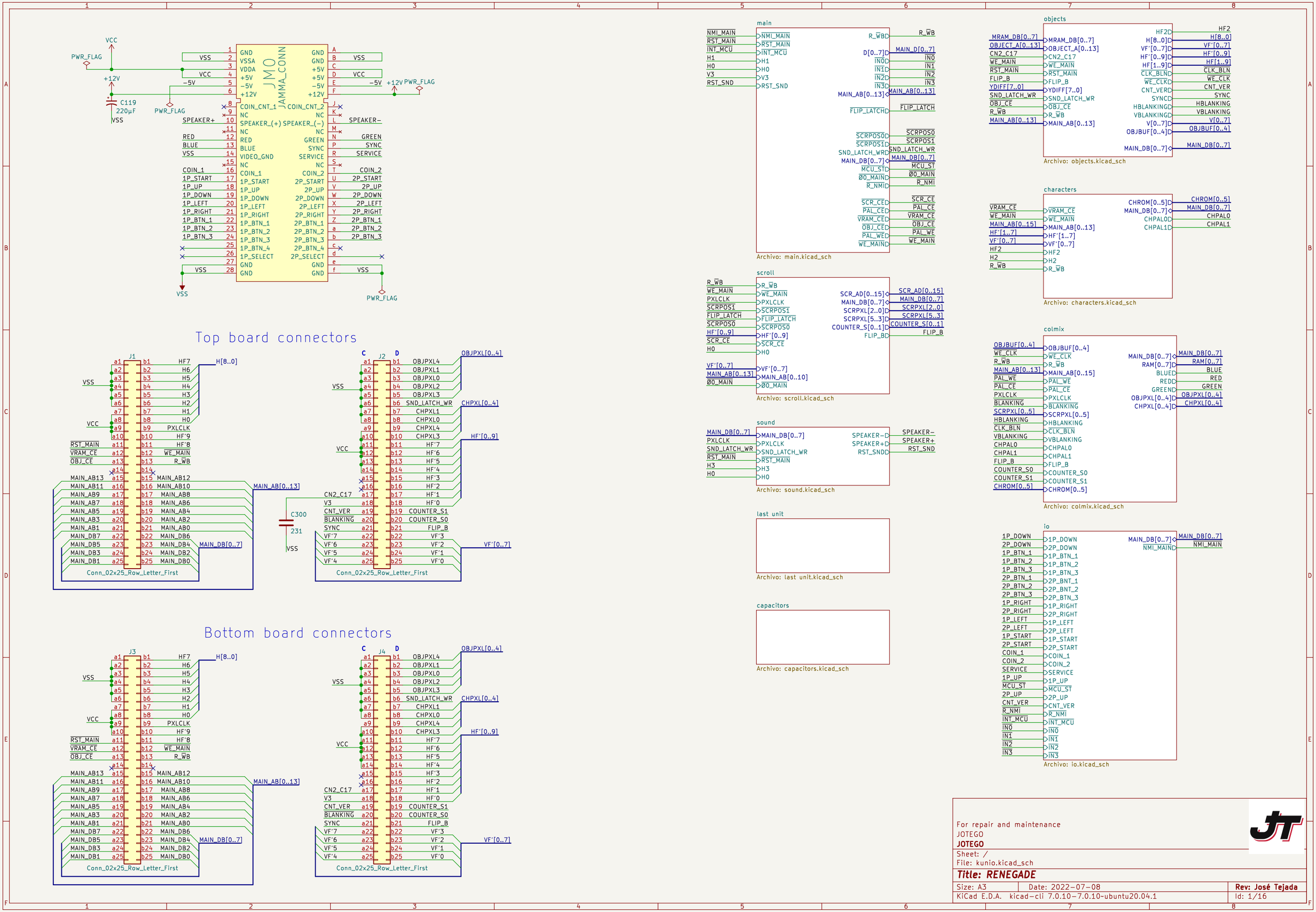
JMO
JAMMA_CONN
Top board connectors
Bottom board connectors
Conn_02x25_Row_Letter_First
main
Archivo: main.kicad_sch
scroll
Archivo: scroll.kicad_sch
sound
Archivo: sound.kicad_sch
last unit
Archivo: last unit.kicad_sch
capacitors
Archivo: capacitors.kicad_sch
objects
Archivo: objects.kicad_sch
characters
Archivo: characters.kicad_sch
colmix
Archivo: colmix.kicad_sch
io
Archivo: io.kicad_sch
For repair and maintenance
JOTEGO
JOTEGO
Sheet: /
File: kunio.kicad_sch
Title: RENEGADE
Size: A3
Date: 2022-07-08
Rev: José Tejada
KiCad E.D.A. kicad-cli 7.0.10-7.0.10~ubuntu20.04.1
Id: 1/16

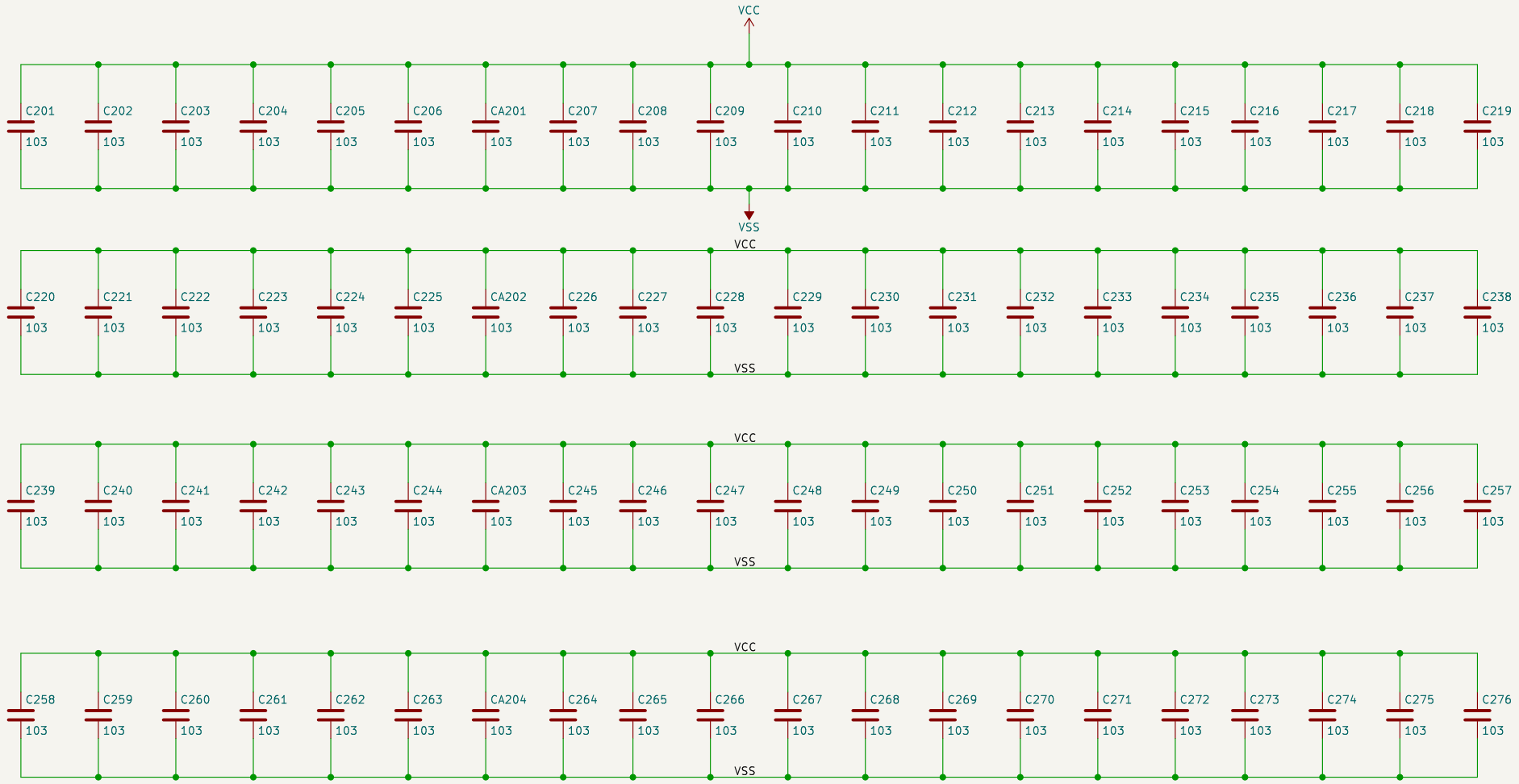

For repair and maintenance
JOTEGO
JOTEGO

Sheet: /capacitors/
File: capacitors.kicad_sch

Title: RENEGADE

Size: A4	Date: 2022-07-08	**Rev: José Tejada**
KiCad E.D.A. kicad-cli 7.0.10-7.0.10~ubuntu20.04.1		Id: 2/16

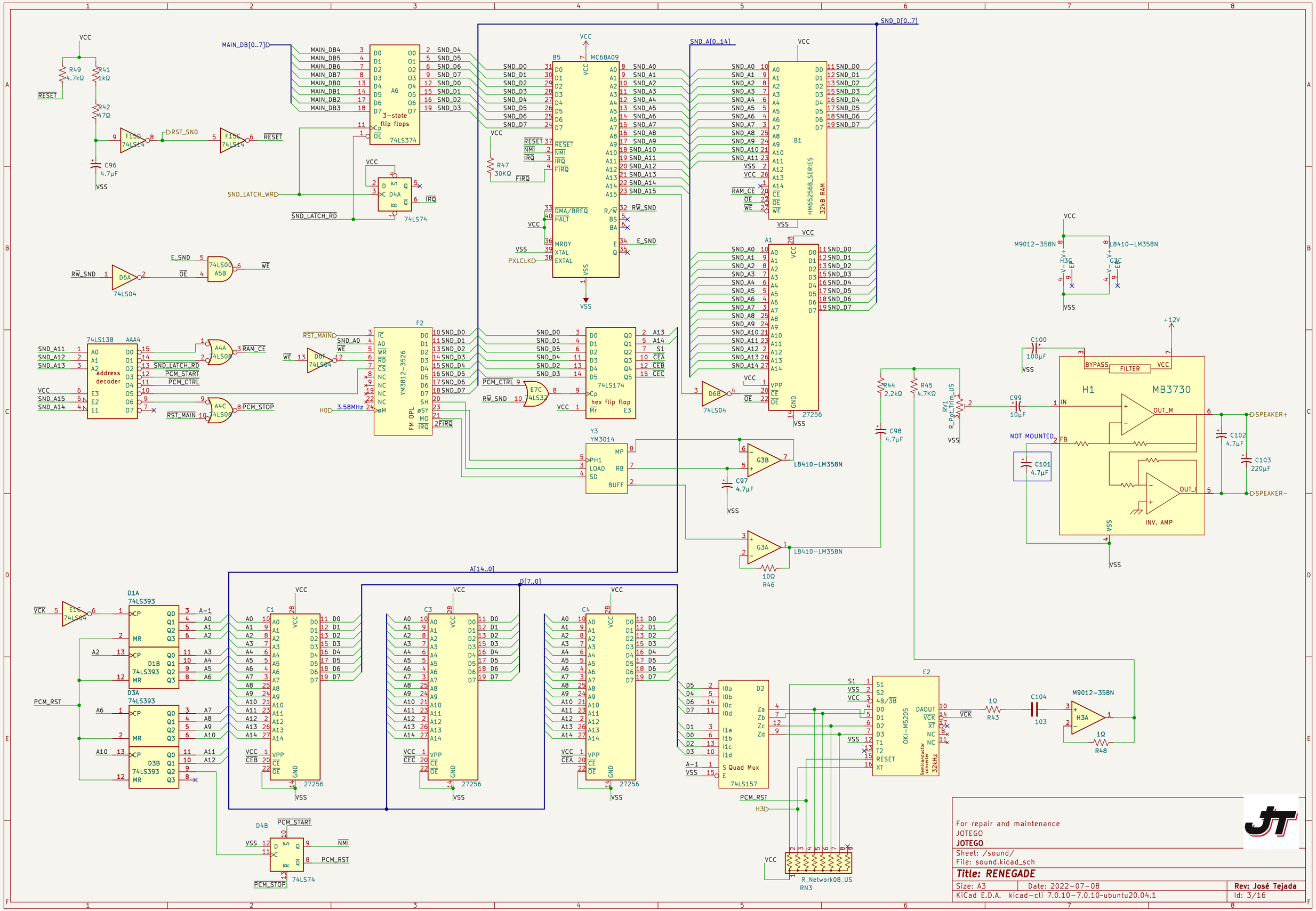

For repair and maintenance
JOTEGO
JOTEGO

Sheet: /sound/
File: sound.kicad_sch

Title: RENEGADE

Size: A3	Date: 2022-07-08	**Rev: José Tejada**
KiCad E.D.A. kicad-cli 7.0.10-7.0.10~ubuntu20.04.1		Id: 3/16

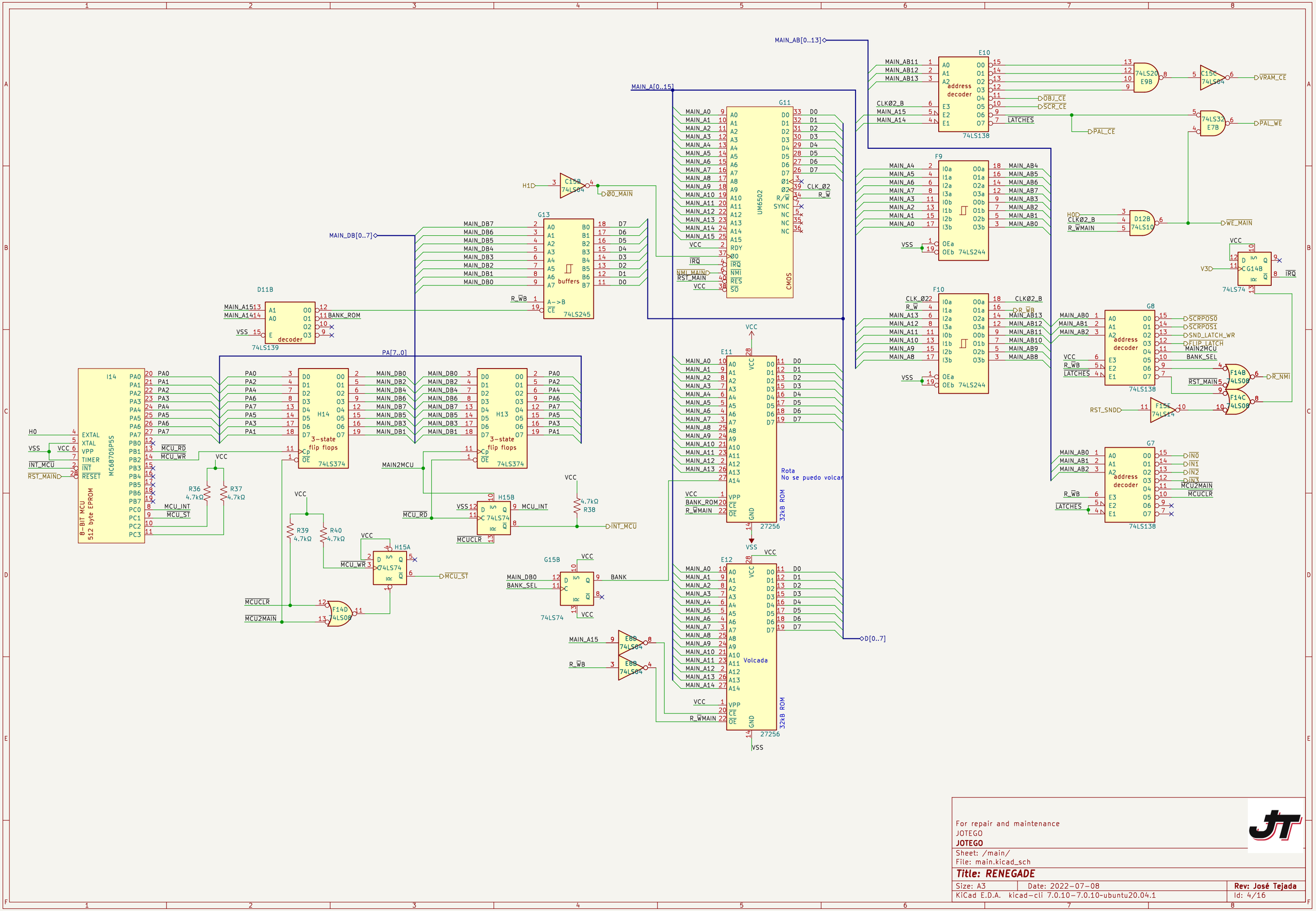

For repair and maintenance
JOTEGO
JOTEGO

Sheet: /main/
File: main.kicad_sch

Title: RENEGADE

Size: A3	Date: 2022-07-08	**Rev: José Tejada**
KiCad E.D.A. kicad-cli 7.0.10-7.0.10~ubuntu20.04.1		Id: 4/16

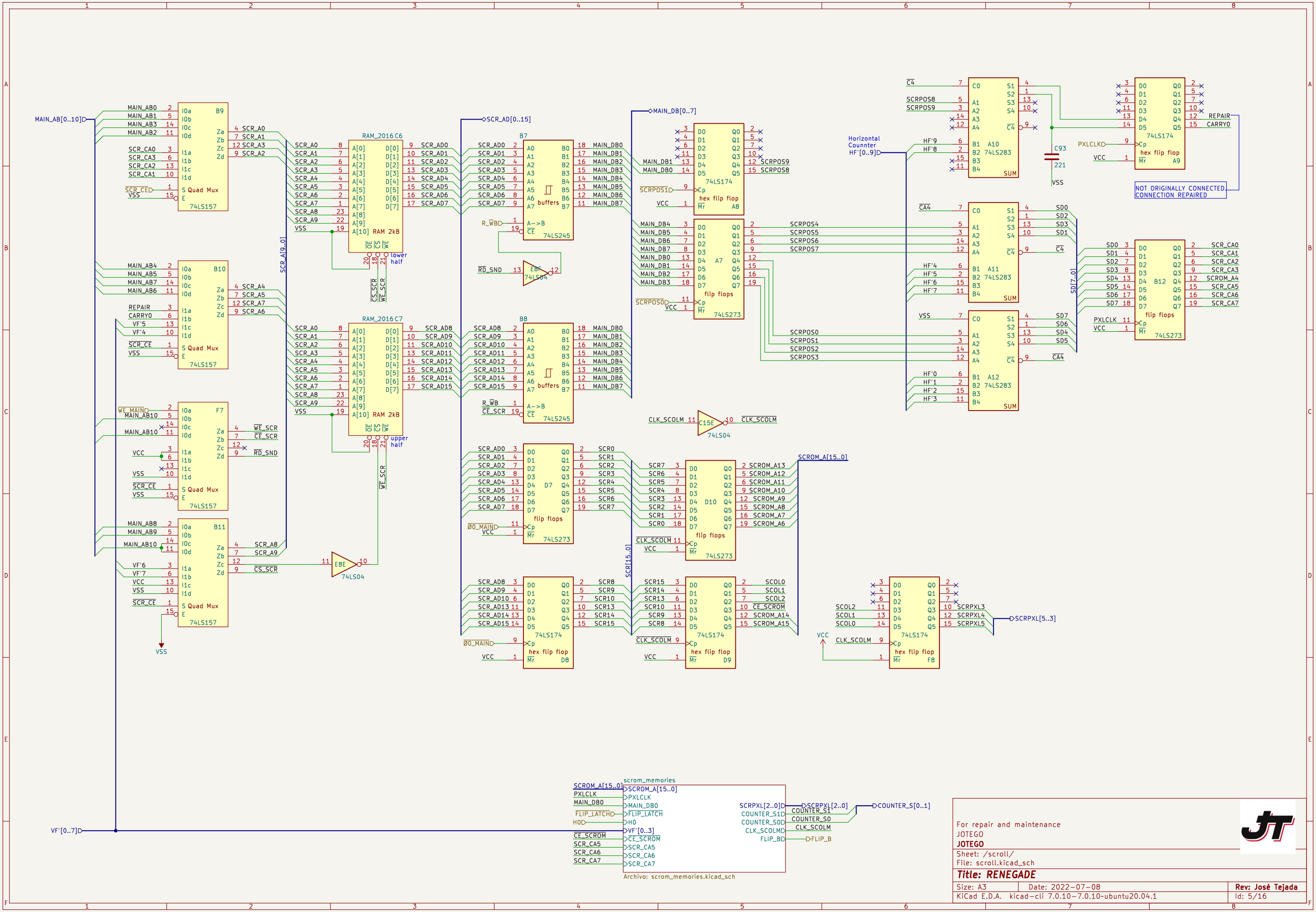

For repair and maintenance
JOTEGO
JOTEGO

Sheet: /scroll/
File: scroll.kicad_sch

Title: RENEGADE

Size: A3	Date: 2022-07-08	Rev: José Tejada
KiCad E.D.A. kicad-cli 7.0.10-7.0.10~ubuntu20.04.1		Id: 5/16

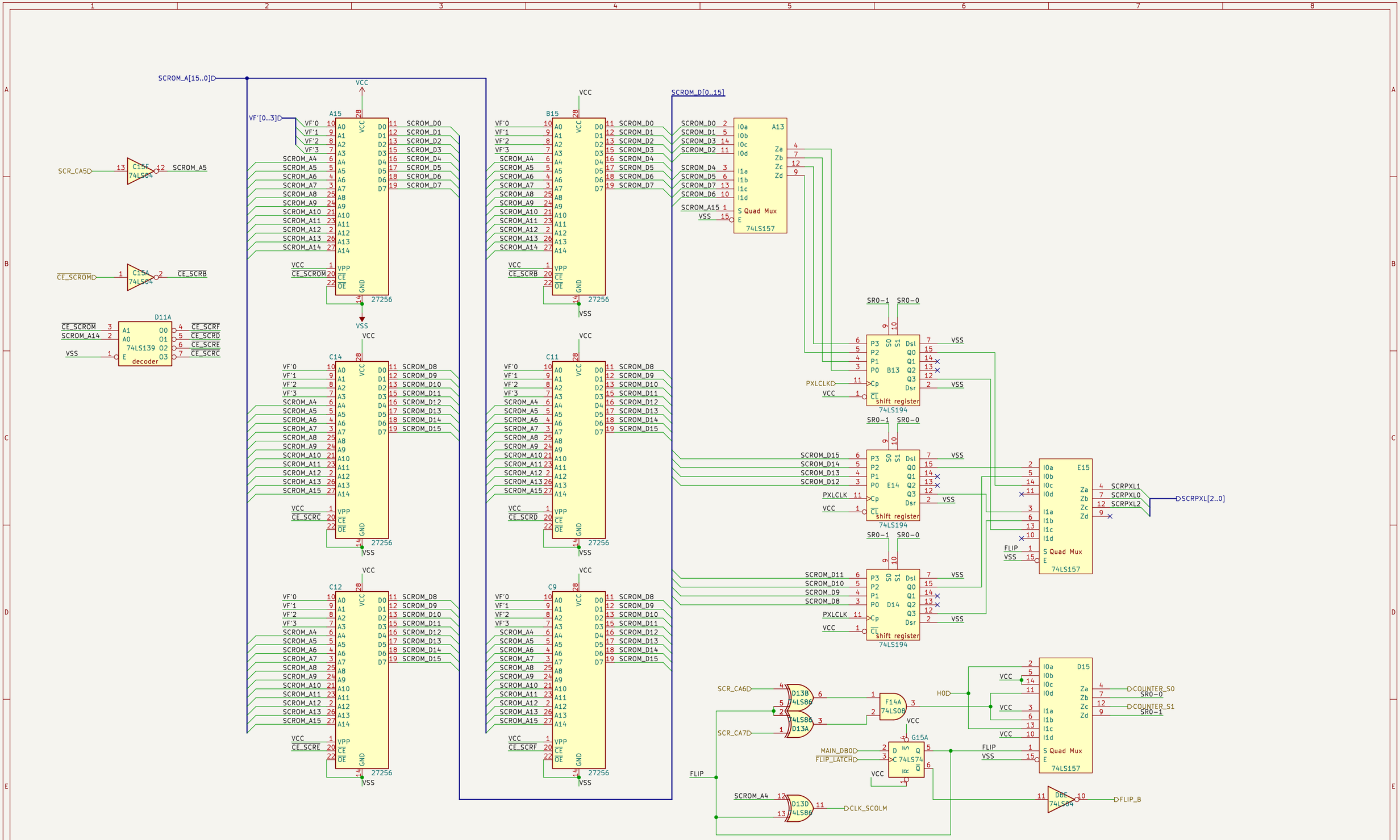

For repair and maintenance
JOTEGO
JOTEGO

Sheet: /scroll/scrom_memories/
File: scrom_memories.kicad_sch

Title: RENEGADE

Size: A3	Date: 2022-07-08	**Rev: José Tejada**
KiCad E.D.A. kicad-cli 7.0.10-7.0.10~ubuntu20.04.1		Id: 6/16

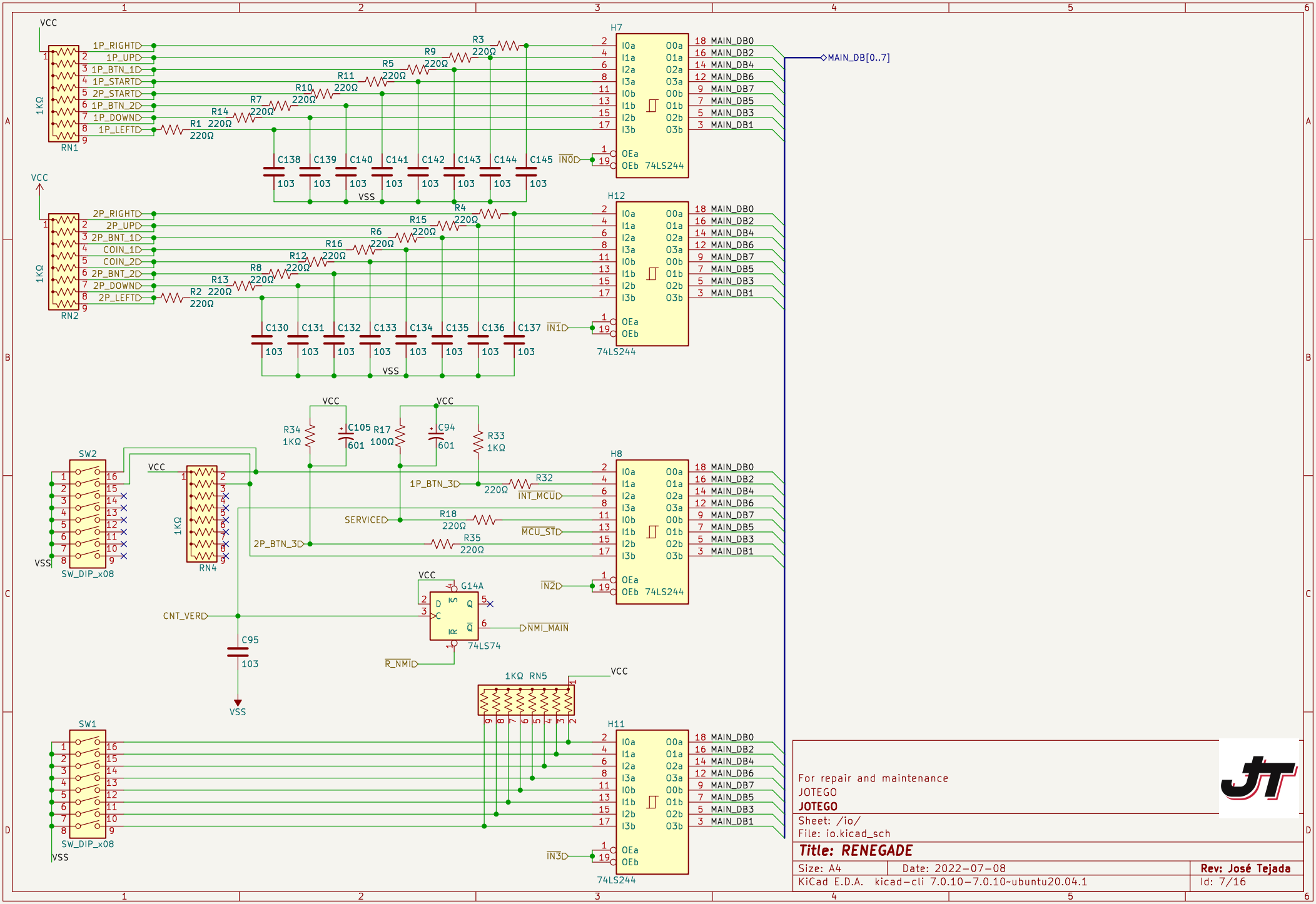
VCC
RN1
1KΩ
1P_RIGHT
1P_UP
1P_BTN_1
1P_START
2P_START
1P_BTN_2
1P_DOWN
1P_LEFT
R1 220Ω
R2 220Ω
R3 220Ω
R4 220Ω
R5 220Ω
R6 220Ω
R7 220Ω
R8 220Ω
R9 220Ω
R10 220Ω
R11 220Ω
R12 220Ω
R13 220Ω
R14 220Ω
R15 220Ω
R16 220Ω
C138 C139 C140 C141 C142 C143 C144 C145
C130 C131 C132 C133 C134 C135 C136 C137
103
VSS
IN0
IN1
H7
H12
74LS244
MAIN_DB[0..7]
MAIN_DB0
MAIN_DB2
MAIN_DB4
MAIN_DB6
MAIN_DB7
MAIN_DB5
MAIN_DB3
MAIN_DB1
RN2
2P_RIGHT
2P_UP
2P_BNT_1
COIN_1
COIN_2
2P_BNT_2
2P_DOWN
2P_LEFT
SW2
SW_DIP_x08
RN4
R34 1KΩ
C105 601
R17 100Ω
C94 601
R33 1KΩ
1P_BTN_3
R32 220Ω
INT_MCU
SERVICE
R18 220Ω
MCU_ST
2P_BTN_3
R35 220Ω
H8
IN2
G14A
74LS74
CNT_VER
NMI_MAIN
R_NMI
C95 103
1KΩ RN5
SW1
H11
IN3
For repair and maintenance
JOTEGO
JOTEGO
Sheet: /io/
File: io.kicad_sch
Title: RENEGADE
Size: A4
Date: 2022-07-08
Rev: José Tejada
KiCad E.D.A. kicad-cli 7.0.10-7.0.10~ubuntu20.04.1
Id: 7/16

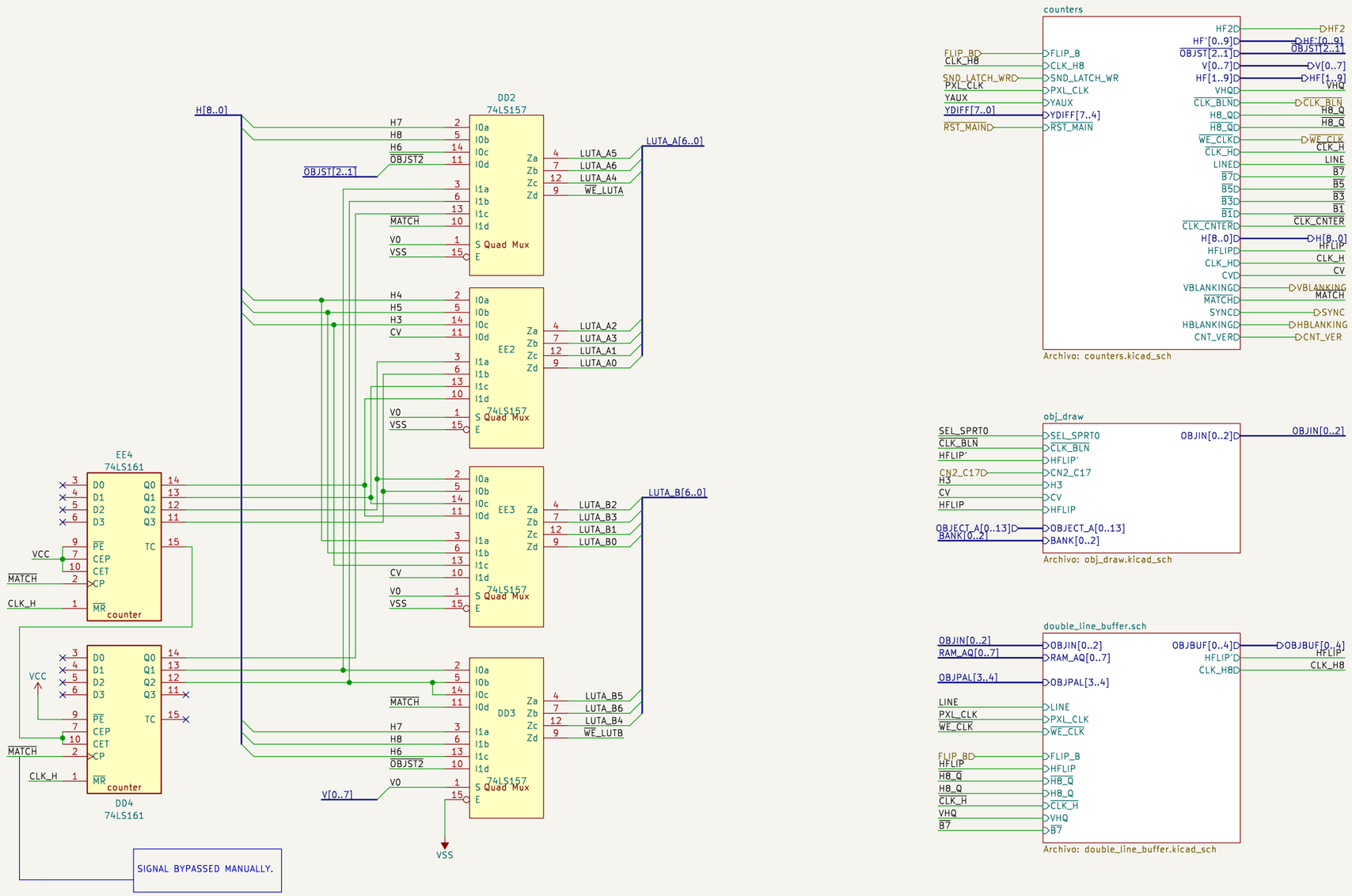

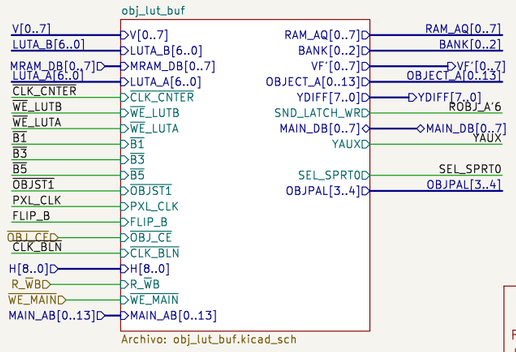

For repair and maintenance
JOTEGO
JOTEGO

Sheet: /objects/
File: objects.kicad_sch

Title: RENEGADE

Size: A3	Date: 2022-07-08	**Rev: José Tejada**
KiCad E.D.A. kicad-cli 7.0.10-7.0.10~ubuntu20.04.1		Id: 8/16

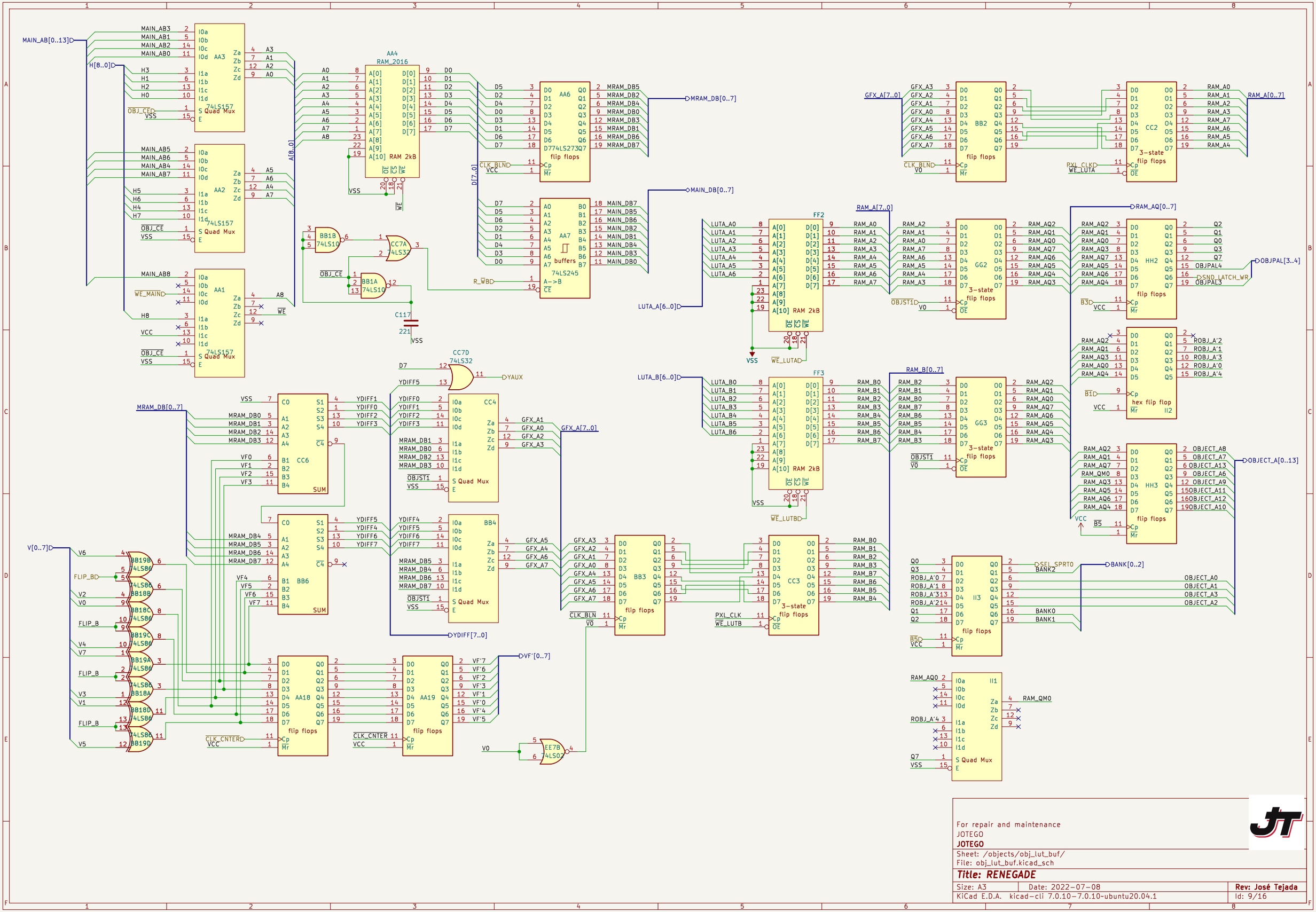

For repair and maintenance
JOTEGO
JOTEGO

Sheet: /objects/obj_lut_buf/
File: obj_lut_buf.kicad_sch

Title: RENEGADE

Size: A3	Date: 2022-07-08	**Rev: José Tejada**
KiCad E.D.A. kicad-cli 7.0.10-7.0.10~ubuntu20.04.1		Id: 9/16

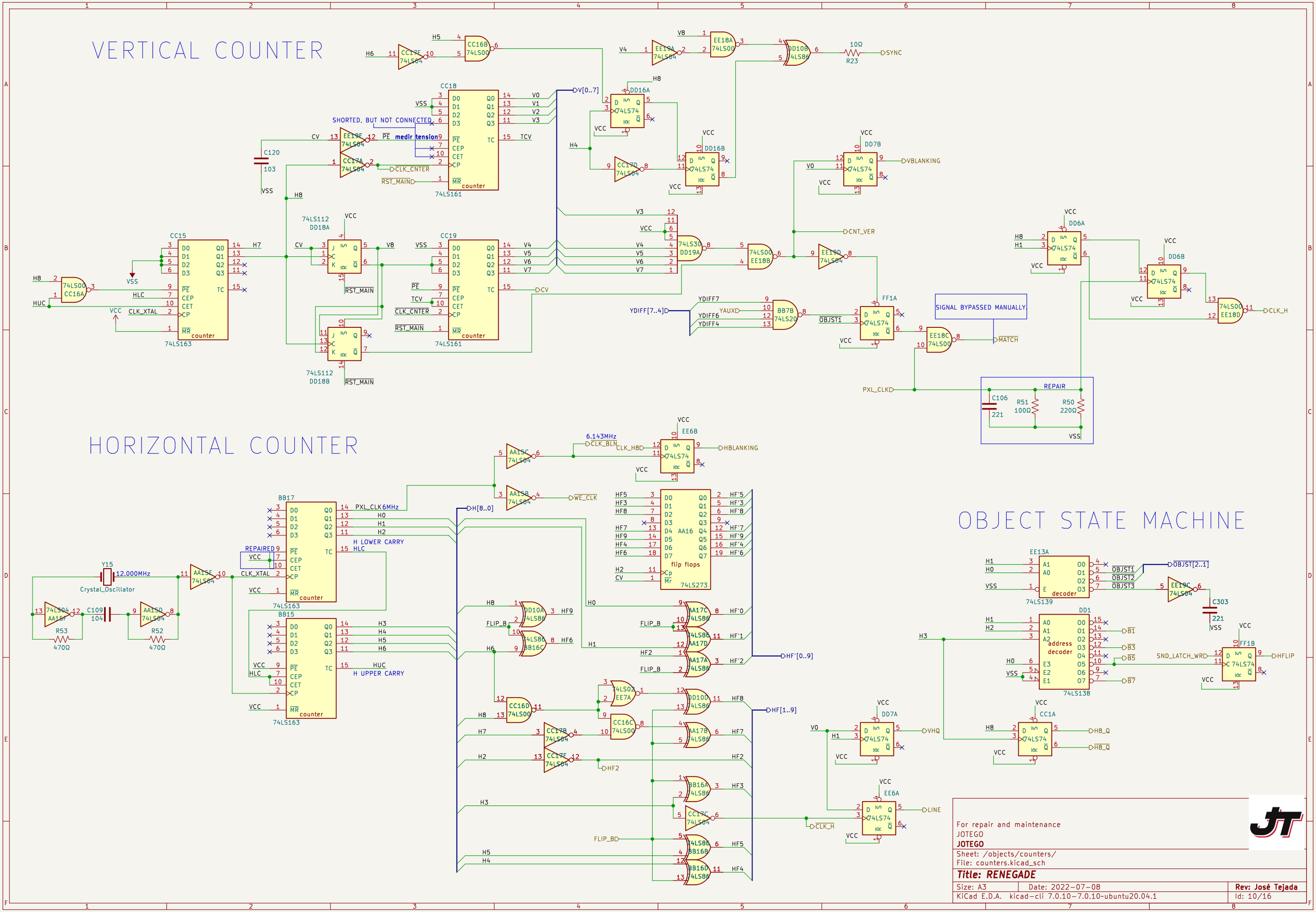
VERTICAL COUNTER
HORIZONTAL COUNTER
OBJECT STATE MACHINE
CC15
74LS163
CC18
74LS161
CC19
74LS161
DD18A
74LS112
DD18B
74LS112
SHORTED, BUT NOT CONNECTED
medir tension
DD16A
DD16B
DD7B
DD6A
DD6B
DD19A
EE18B
FF1A
BB7B
74LS20
SIGNAL BYPASSED MANUALLY.
REPAIR
R23
10Ω
SYNC
VBLANKING
CNT_VER
MATCH
CLK_H
PXL_CLK
YDIFF[7..4]
YDIFF7
YDIFF6
YDIFF4
YAUXD
OBJST1
C120
103
C106
221
R51
100Ω
R50
220Ω
BB17
BB15
74LS163
H[8..0]
PXL_CLK
6MHz
H0
H1
H2
H LOWER CARRY
HLC
H3
H4
H5
H6
H UPPER CARRY
HUC
REPAIRED
Y15
12.000MHz
Crystal_Oscillator
C109
104
R53
470Ω
R52
470Ω
6.143MHz
CLK_BLN
CLK_H8
EE6B
HBLANKING
WE_CLK
AA16
flip flops
74LS273
HF'[0..9]
HF[1..9]
HF'5
HF'3
HF'8
HF'7
HF'9
HF'4
HF'6
HF'0
HF'1
HF'2
HF9
HF6
HF8
HF7
HF2
HF3
HF5
HF4
FLIP_B
FLIP_BD
EE13A
74LS139
decoder
OBJST[2..1]
OBJST1
OBJST2
OBJST3
C303
221
DD1
74LS138
address decoder
B1
B3
B5
B7
SND_LATCH_WRD
FF1B
HFLIP
DD7A
VHQ
CC1A
H8_Q
EE6A
LINE
CLK_H
For repair and maintenance
JOTEGO
JOTEGO
Sheet: /objects/counters/
File: counters.kicad_sch
Title: RENEGADE
Size: A3
Date: 2022-07-08
Rev: José Tejada
KiCad E.D.A. kicad-cli 7.0.10-7.0.10-ubuntu20.04.1
Id: 10/16

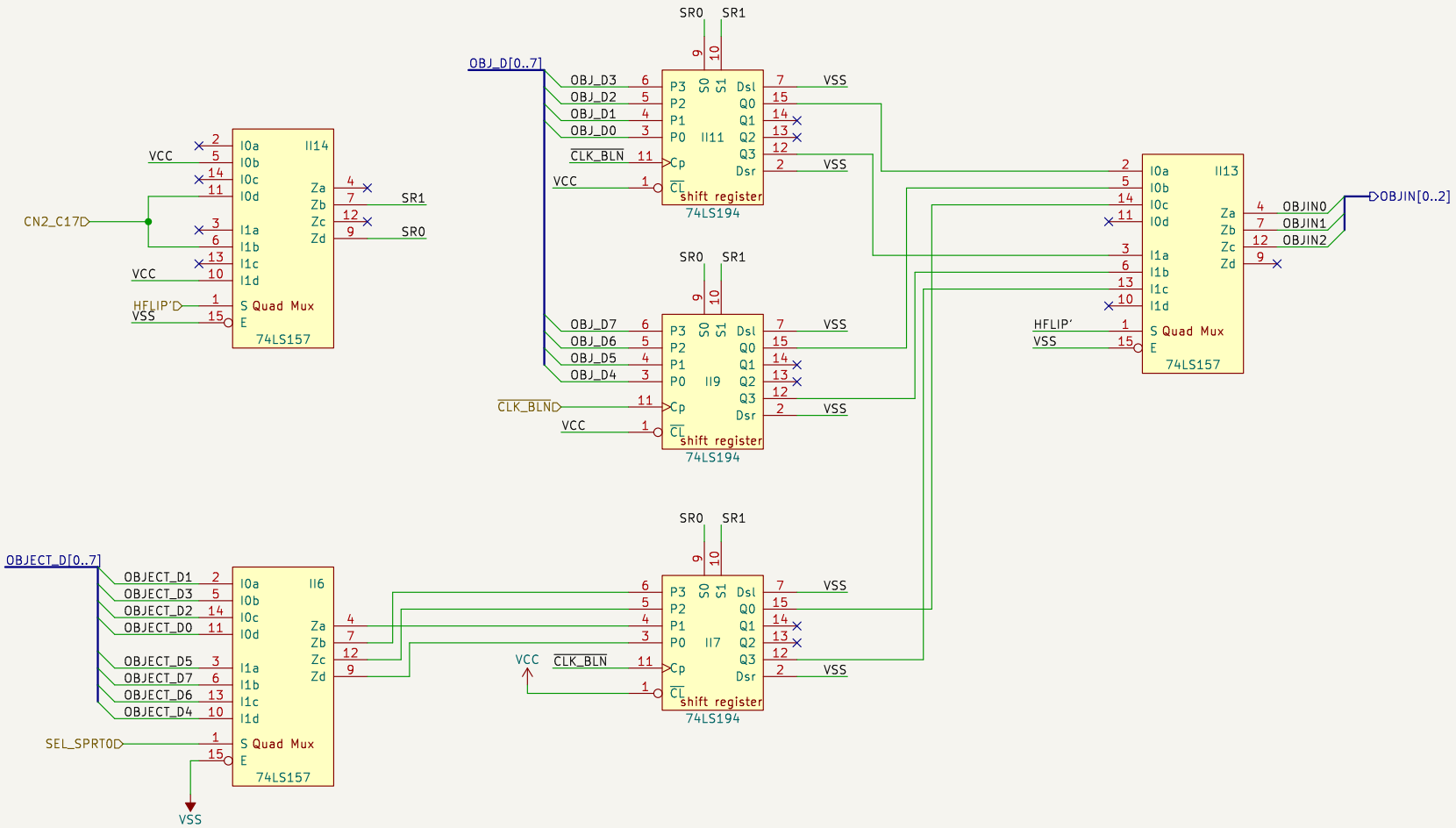

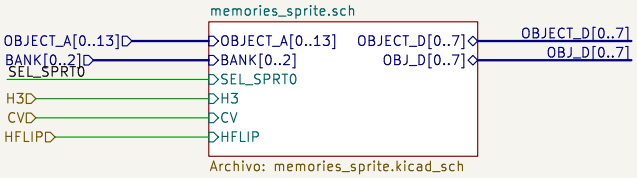

For repair and maintenance
JOTEGO

JOTEGO

Sheet: /objects/obj_draw/
File: obj_draw.kicad_sch

Title: RENEGADE

Size: A4	Date: 2022-07-08	**Rev: José Tejada**
KiCad E.D.A. kicad-cli 7.0.10-7.0.10~ubuntu20.04.1		Id: 11/16

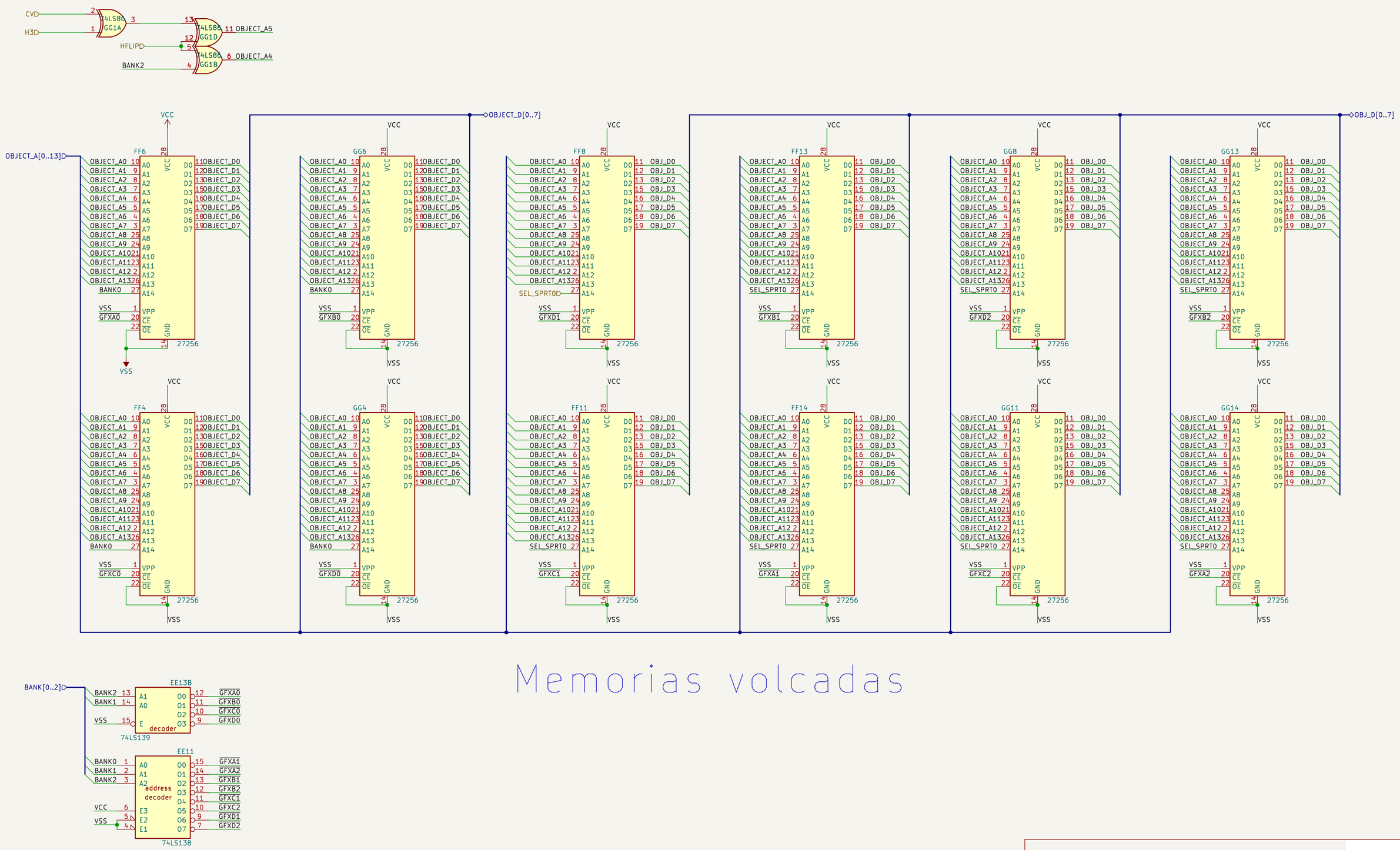

For repair and maintenance
JOTEGO
JOTEGO

Sheet: /objects/obj_draw/memories_sprite.sch/
File: memories_sprite.kicad_sch

Title: RENEGADE

Size: A3	Date: 2022-07-08	**Rev: José Tejada**
KiCad E.D.A. kicad-cli 7.0.10-7.0.10~ubuntu20.04.1		Id: 12/16

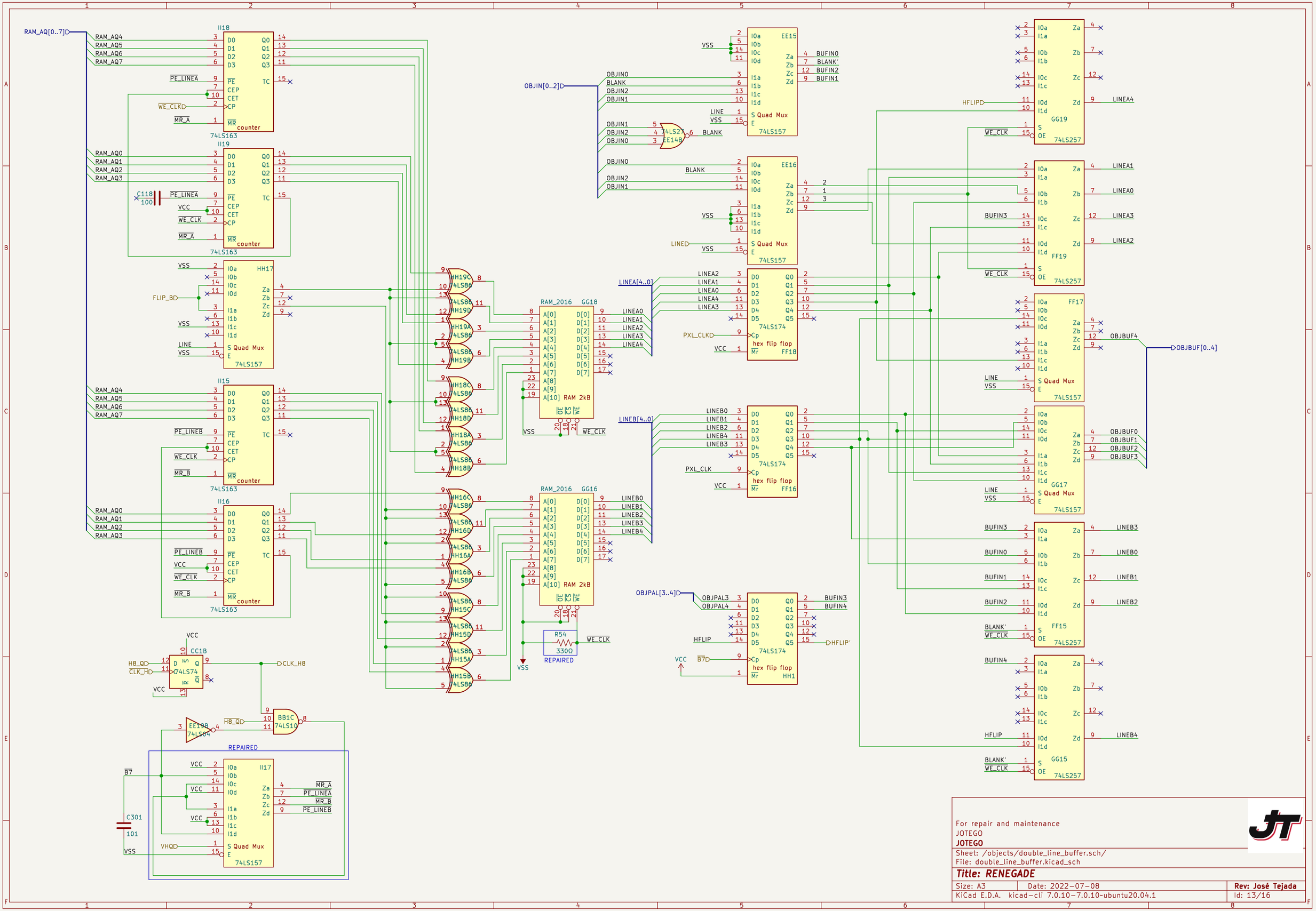

For repair and maintenance
JOTEGO
JOTEGO

Sheet: /objects/double_line_buffer.sch/
File: double_line_buffer.kicad_sch

Title: RENEGADE

Size: A3	Date: 2022-07-08	**Rev: José Tejada**
KiCad E.D.A. kicad-cli 7.0.10-7.0.10~ubuntu20.04.1		Id: 13/16

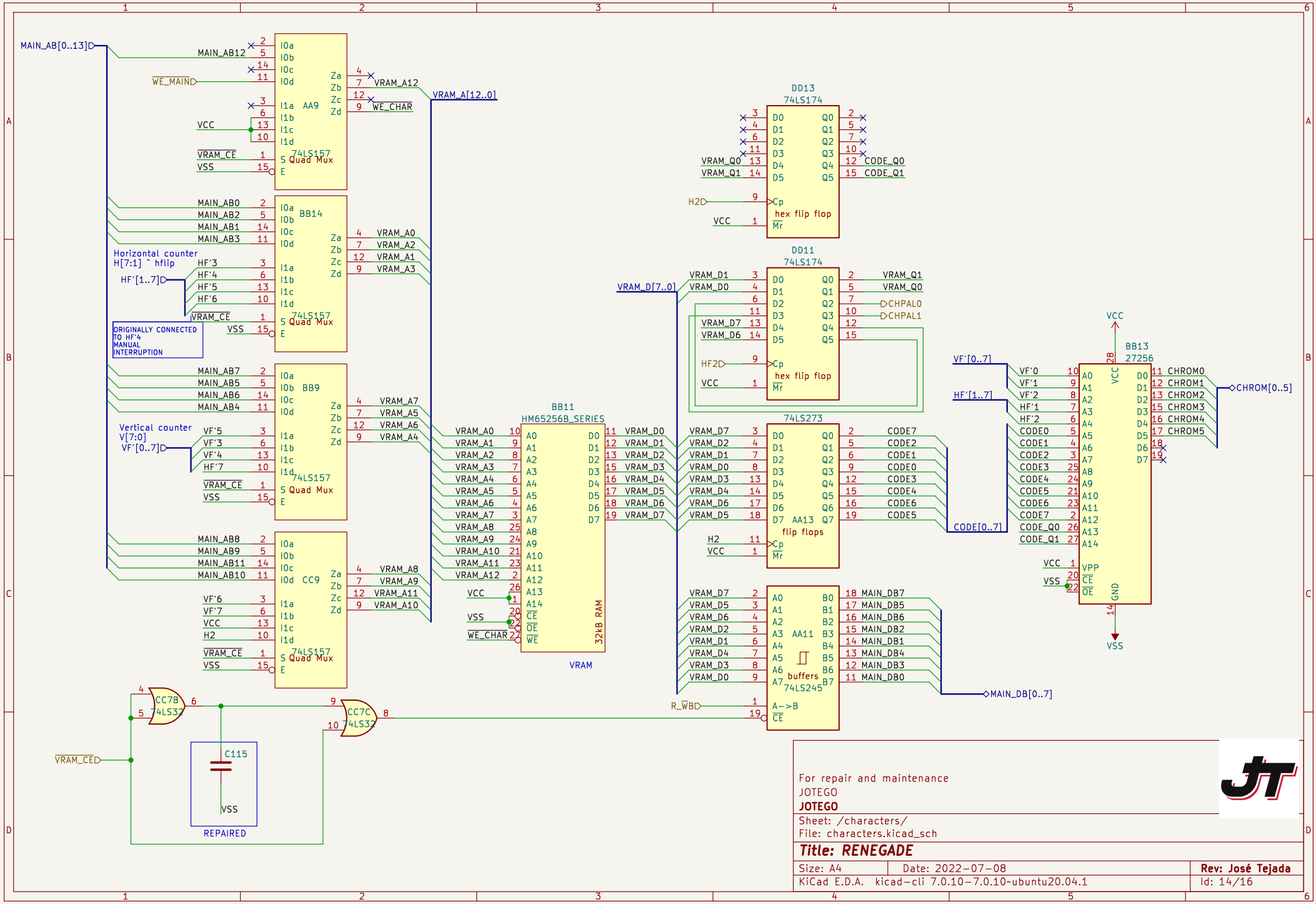

For repair and maintenance
JOTEGO
JOTEGO

Sheet: /characters/
File: characters.kicad_sch

Title: RENEGADE

Size: A4	Date: 2022-07-08	**Rev: José Tejada**
KiCad E.D.A. kicad-cli 7.0.10-7.0.10~ubuntu20.04.1		Id: 14/16

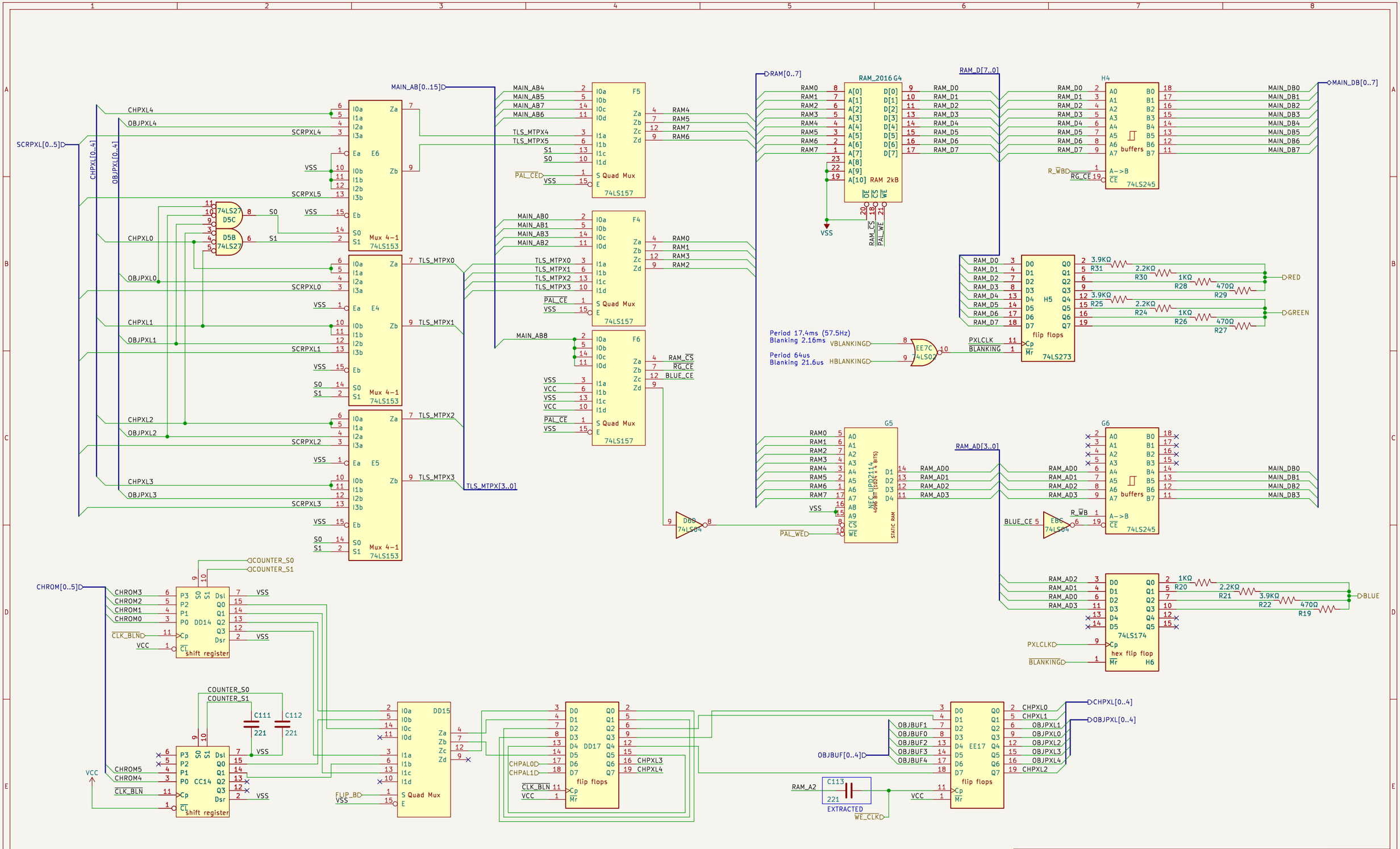
SCRPXL[0..5]
CHPXL[0..4]
OBJPXL[0..4]
MAIN_AB[0..15]
TLS_MTPX[3..0]
RAM[0..7]
RAM_D[7..0]
MAIN_DB[0..7]
RAM_AD[3..0]
CHROM[0..5]
Mux 4-1 74LS153
74LS157
Quad Mux
RAM_2016 G4
RAM 2kB
buffers
74LS245
flip flops
74LS273
74LS174
hex flip flop
NEC UPD2114 4096 BIT (1024 x 4 BITS) STATIC RAM
shift register
DD14
CC14
DD15
DD17
EE17
RED
GREEN
BLUE
Period 17.4ms (57.5Hz)
Blanking 2.16ms
Period 64us
Blanking 21.6us
VBLANKING
HBLANKING
PXLCLK
BLANKING
PAL_CE
PAL_WE
RAM_CS
RG_CE
BLUE_CE
R_WB
COUNTER_S0
COUNTER_S1
CLK_BLN
FLIP_BD
OBJBUF[0..4]
RAM_A2
WE_CLK
EXTRACTED
C111
C112
C113
For repair and maintenance
JOTEGO
JOTEGO
Sheet: /colmix/
File: colmix.kicad_sch
Title: RENEGADE
Size: A3
Date: 2022-07-08
Rev: José Tejada
KiCad E.D.A. kicad-cli 7.0.10-7.0.10~ubuntu20.04.1
Id: 15/16

For repair and maintenance
JOTEGO
JOTEGO

Sheet: /last unit/
File: last unit.kicad_sch

Title: RENEGADE

Size: A4	Date: 2022-07-08	**Rev: José Tejada**
KiCad E.D.A. kicad-cli 7.0.10-7.0.10~ubuntu20.04.1		Id: 16/16