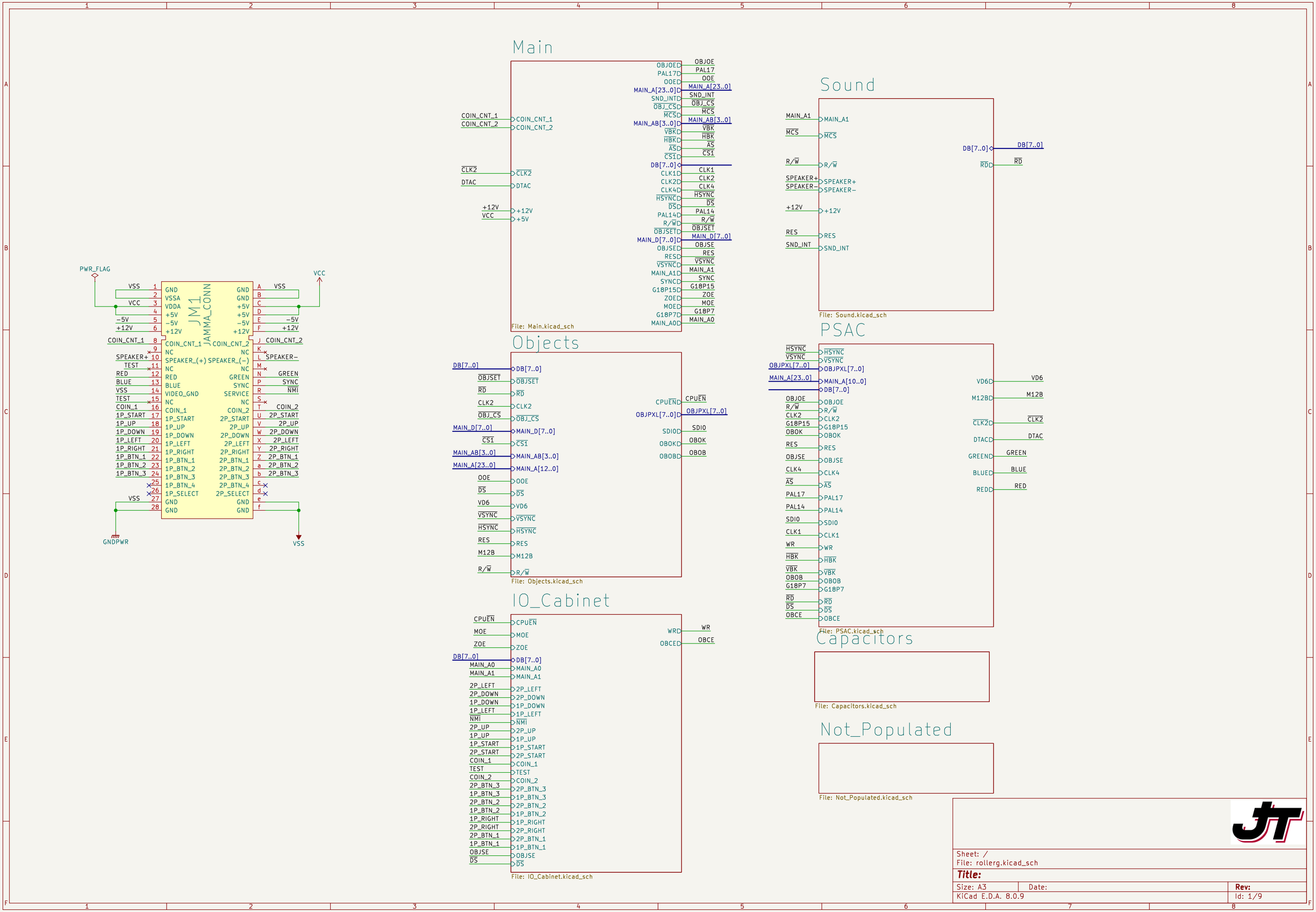
Main
File: Main.kicad_sch
Sound
File: Sound.kicad_sch
PSAC
File: PSAC.kicad_sch
Objects
File: Objects.kicad_sch
IO_Cabinet
File: IO_Cabinet.kicad_sch
Capacitors
File: Capacitors.kicad_sch
Not_Populated
File: Not_Populated.kicad_sch
JM1
JAMMA_CONN
PWR_FLAG
GNDPWR
VCC
VSS
Sheet: /
File: rollerg.kicad_sch
Title:
Size: A3
Date:
Rev:
KiCad E.D.A. 8.0.9
Id: 1/9

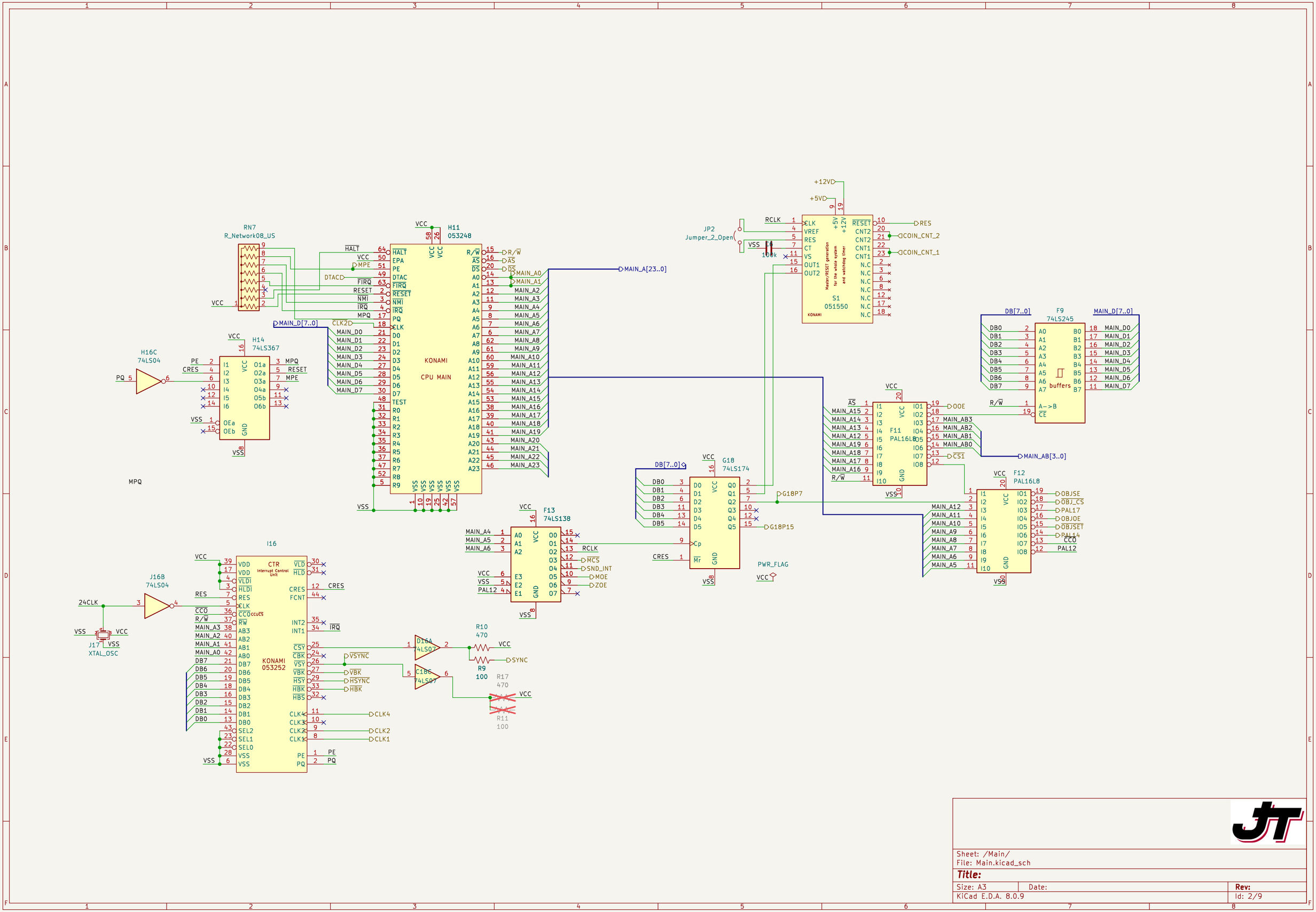

Sheet: /Main/
File: Main.kicad_sch

Title:

Size: A3	Date:	Rev:
KiCad E.D.A. 8.0.9		Id: 2/9

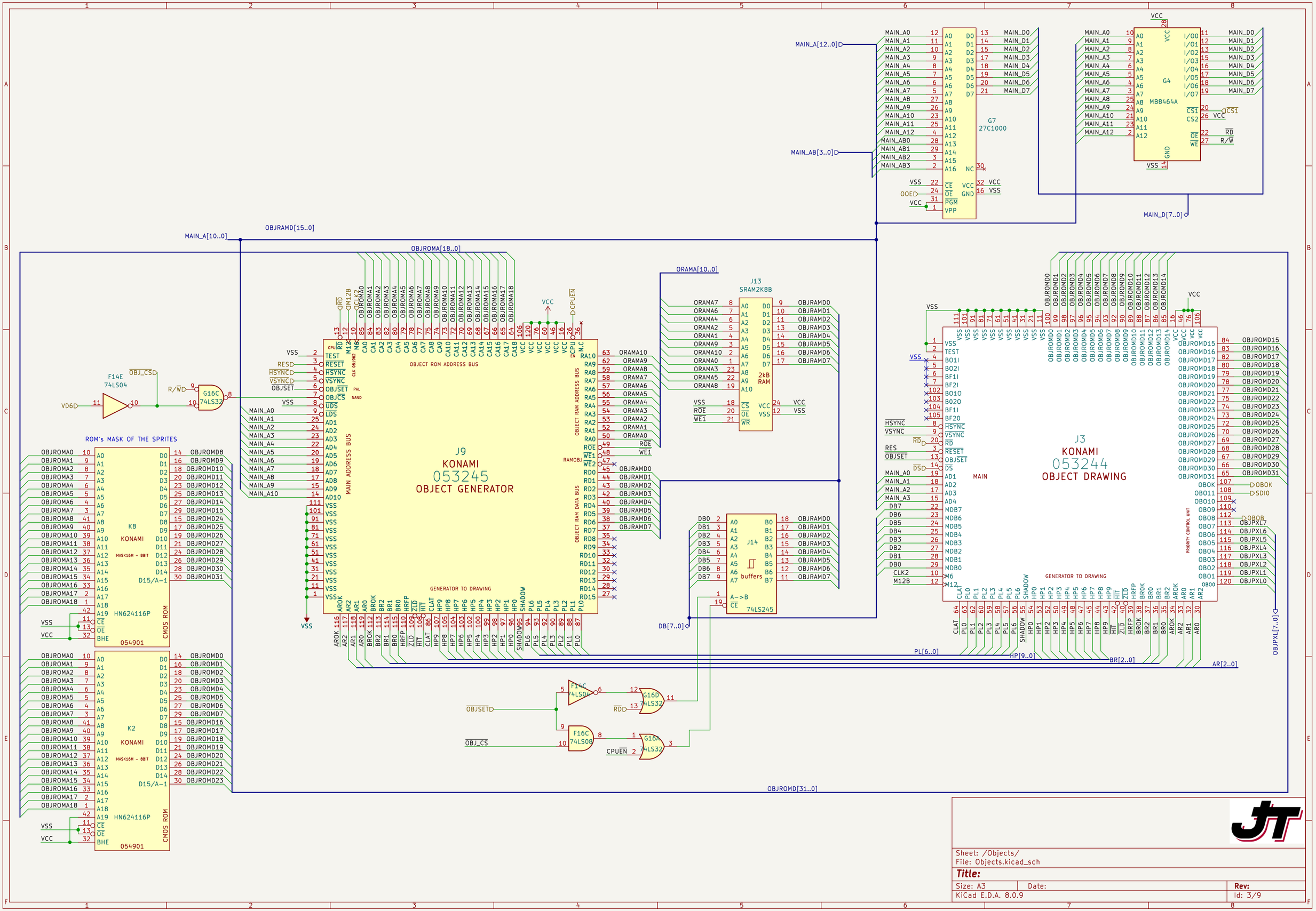

Sheet: /Objects/
File: Objects.kicad_sch

Title:

Size: A3 | Date: | **Rev:**
KiCad E.D.A. 8.0.9 | Id: 3/9

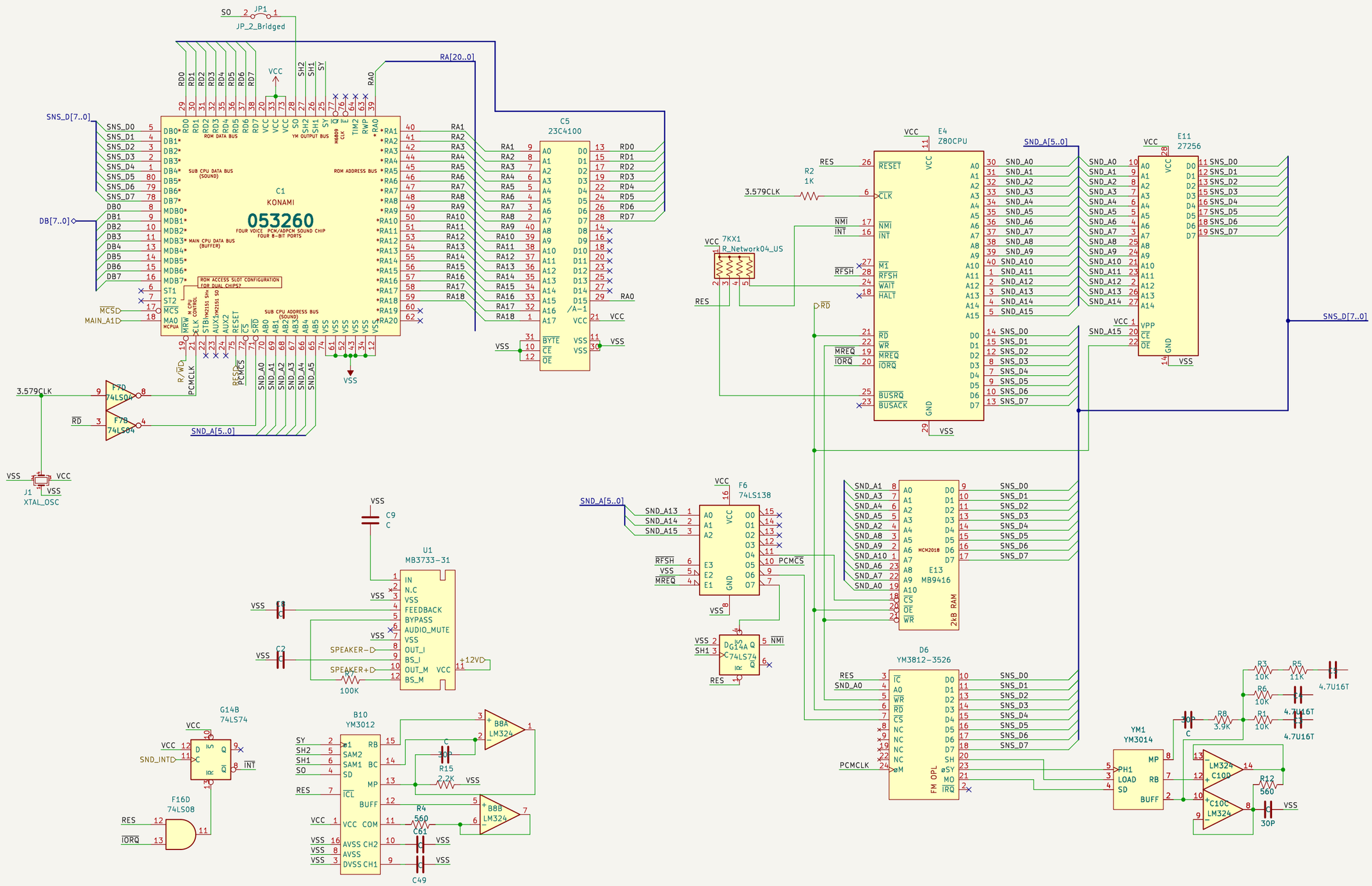

Sheet: /Sound/
File: Sound.kicad_sch

Title:

Size: A3	Date:	Rev:
KiCad E.D.A. 8.0.9		Id: 5/9

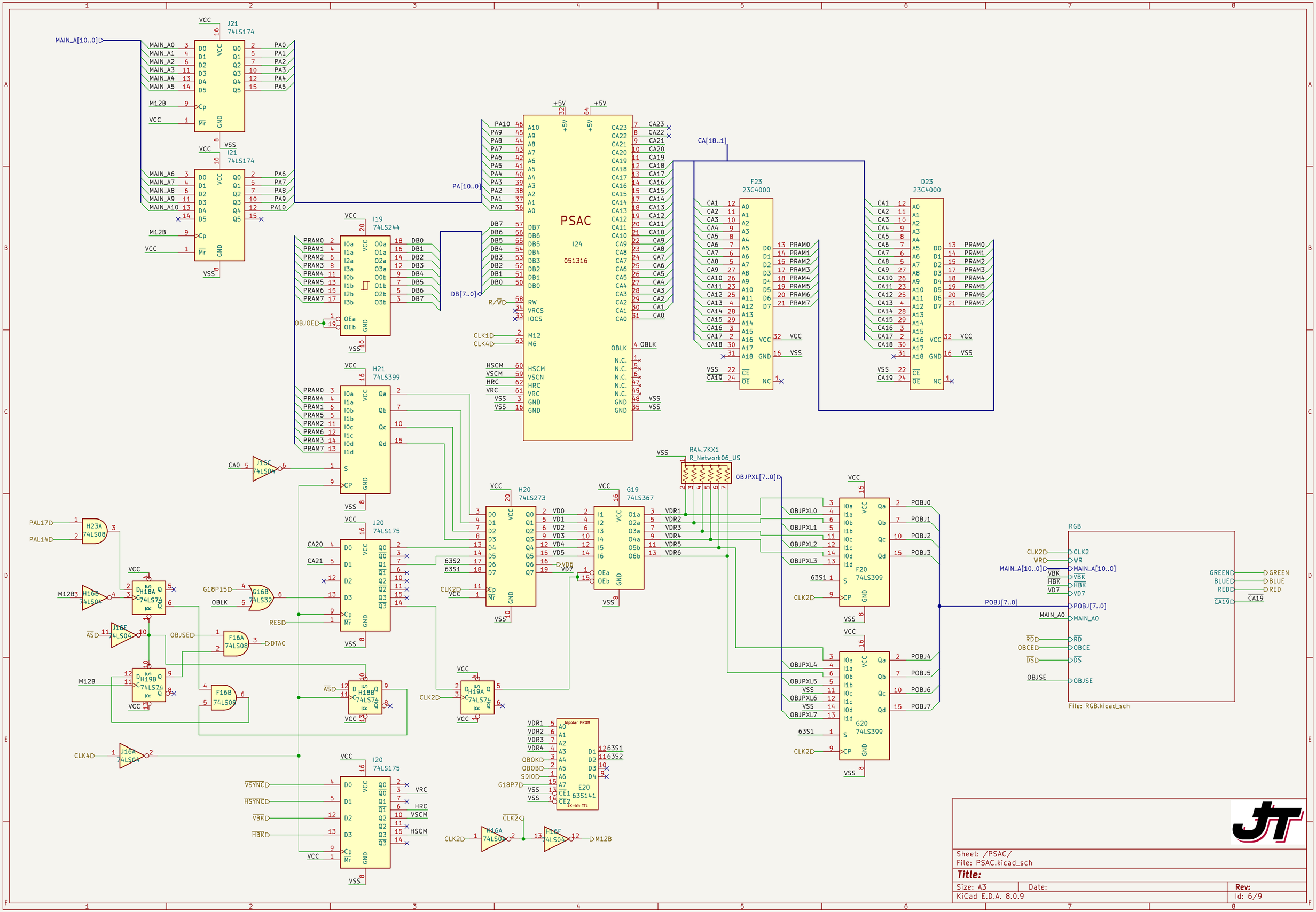

Sheet: /PSAC/
File: PSAC.kicad_sch

Title:

Size: A3	Date:	Rev:
KiCad E.D.A. 8.0.9		Id: 6/9

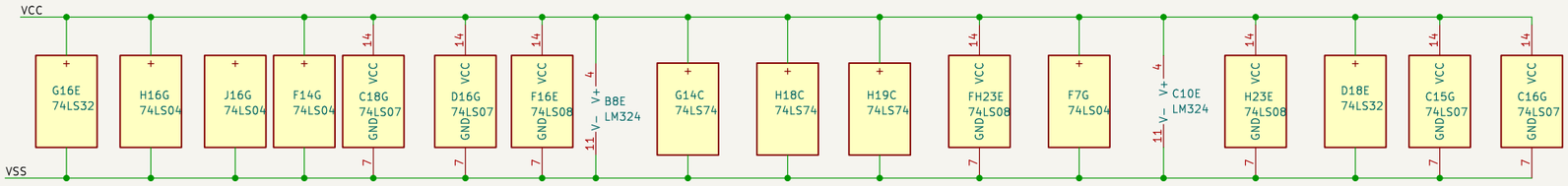

Sheet: /Capacitors/
File: Capacitors.kicad_sch

Title:

Size: A3	Date:	Rev:
KiCad E.D.A. 8.0.9		Id: 7/9

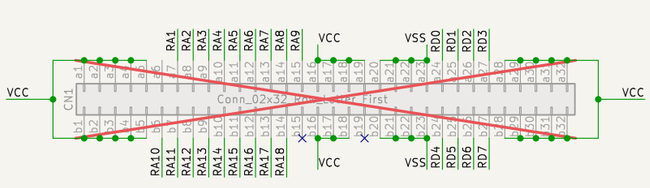

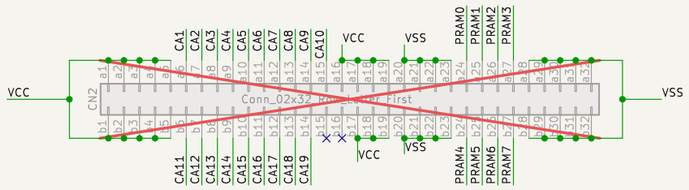

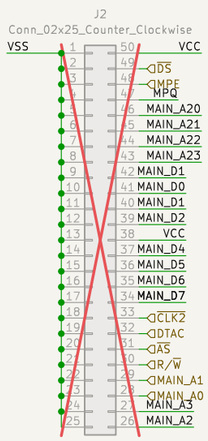

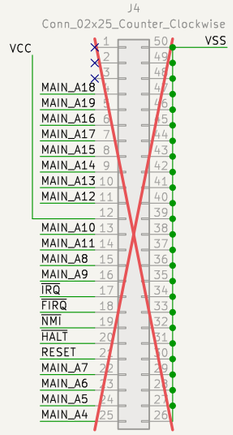

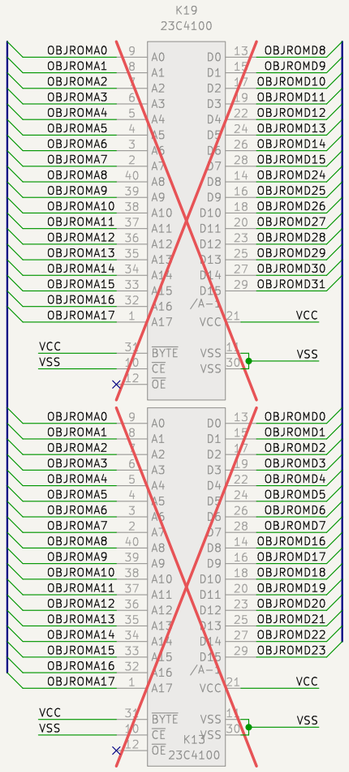

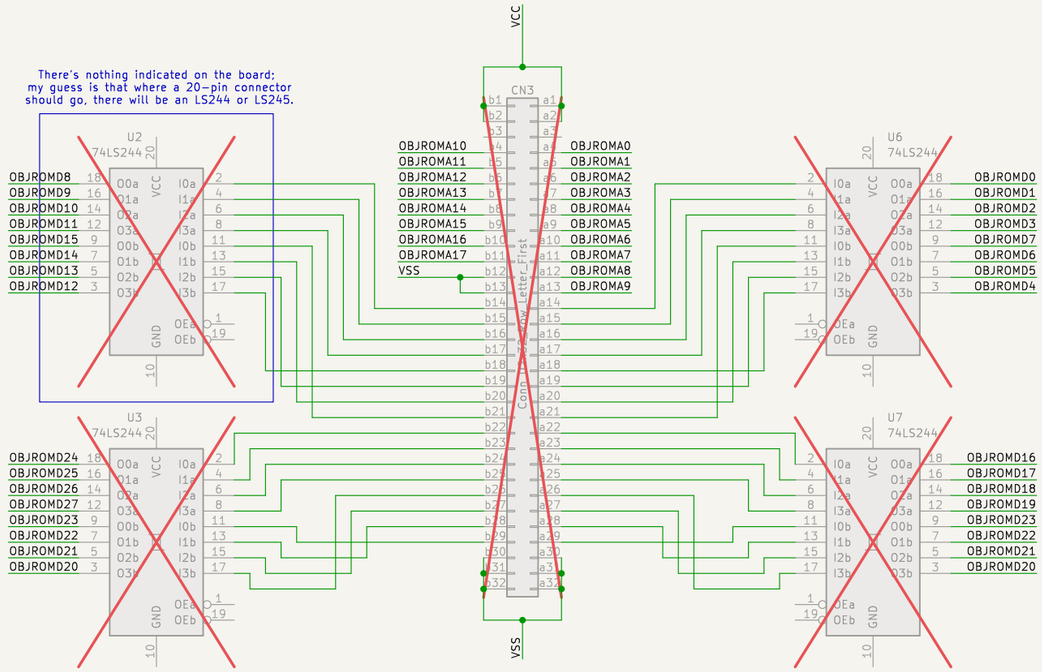

Sheet: /Not_Populated/
File: Not_Populated.kicad_sch

Title:

Size: A3	Date:	Rev:
KiCad E.D.A. 8.0.9		Id: 8/9

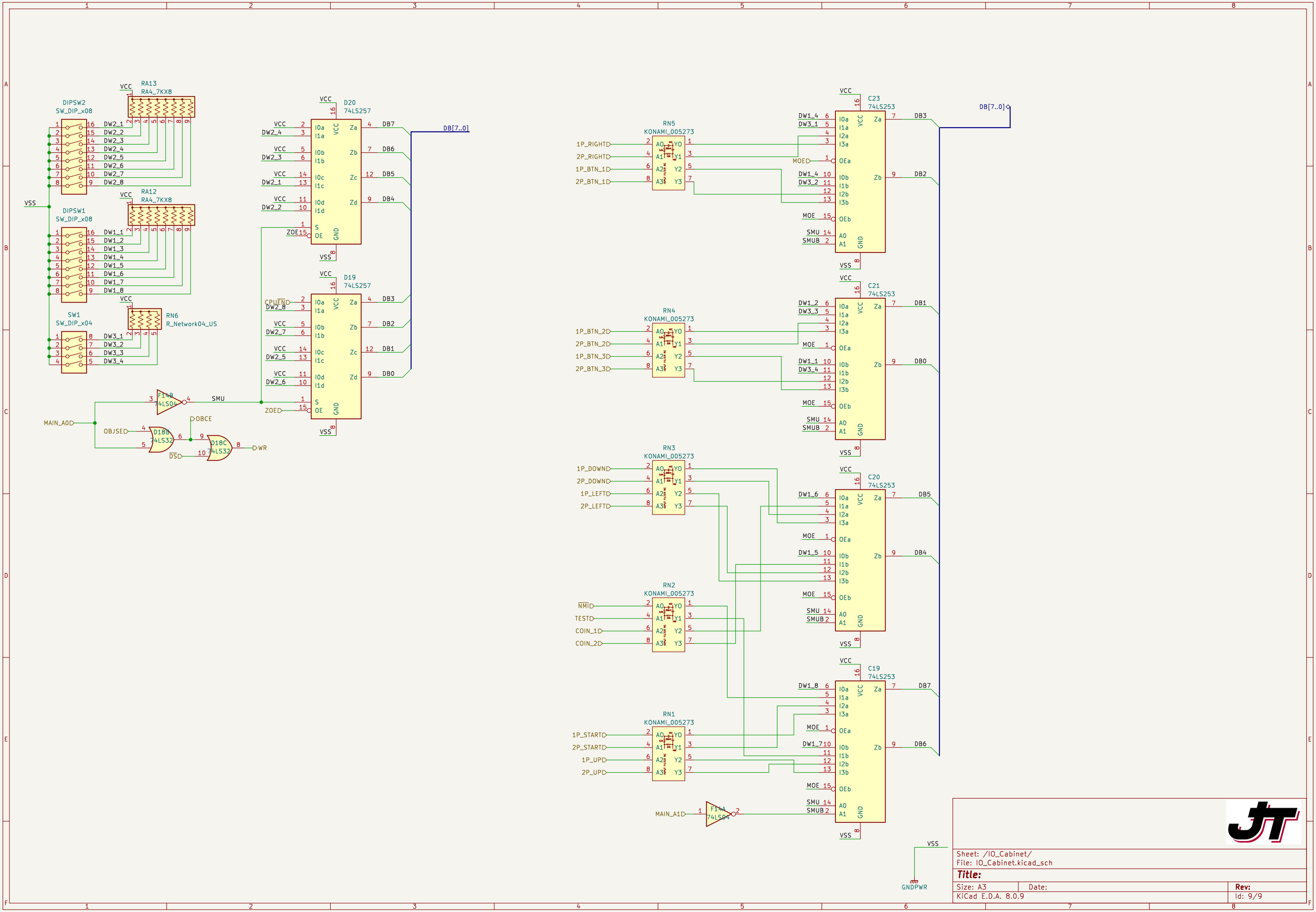
DIPSW2
SW_DIP_x08
RA13
RA4_7KX8
DIPSW1
SW_DIP_x08
RA12
RA4_7KX8
SW1
SW_DIP_x04
RN6
R_Network04_US
D20
74LS257
D19
74LS257
F14B
74LS04
D18B
74LS32
D18C
74LS32
MAIN_A0
OBJSE
OBCE
DS
WR
SMU
ZOE
CPUEN
DB[7..0]
RN5
KONAMI_005273
RN4
KONAMI_005273
RN3
KONAMI_005273
RN2
KONAMI_005273
RN1
KONAMI_005273
1P_RIGHT
2P_RIGHT
1P_BTN_1
2P_BTN_1
1P_BTN_2
2P_BTN_2
1P_BTN_3
2P_BTN_3
1P_DOWN
2P_DOWN
1P_LEFT
2P_LEFT
NMI
TEST
COIN_1
COIN_2
1P_START
2P_START
1P_UP
2P_UP
MAIN_A1
F14A
74LS04
C23
74LS253
C21
74LS253
C20
74LS253
C19
74LS253
MOE
SMU
SMUB
VCC
VSS
GNDPWR
Sheet: /IO_Cabinet/
File: IO_Cabinet.kicad_sch
Title:
Size: A3
Date:
Rev:
KiCad E.D.A. 8.0.9
Id: 9/9

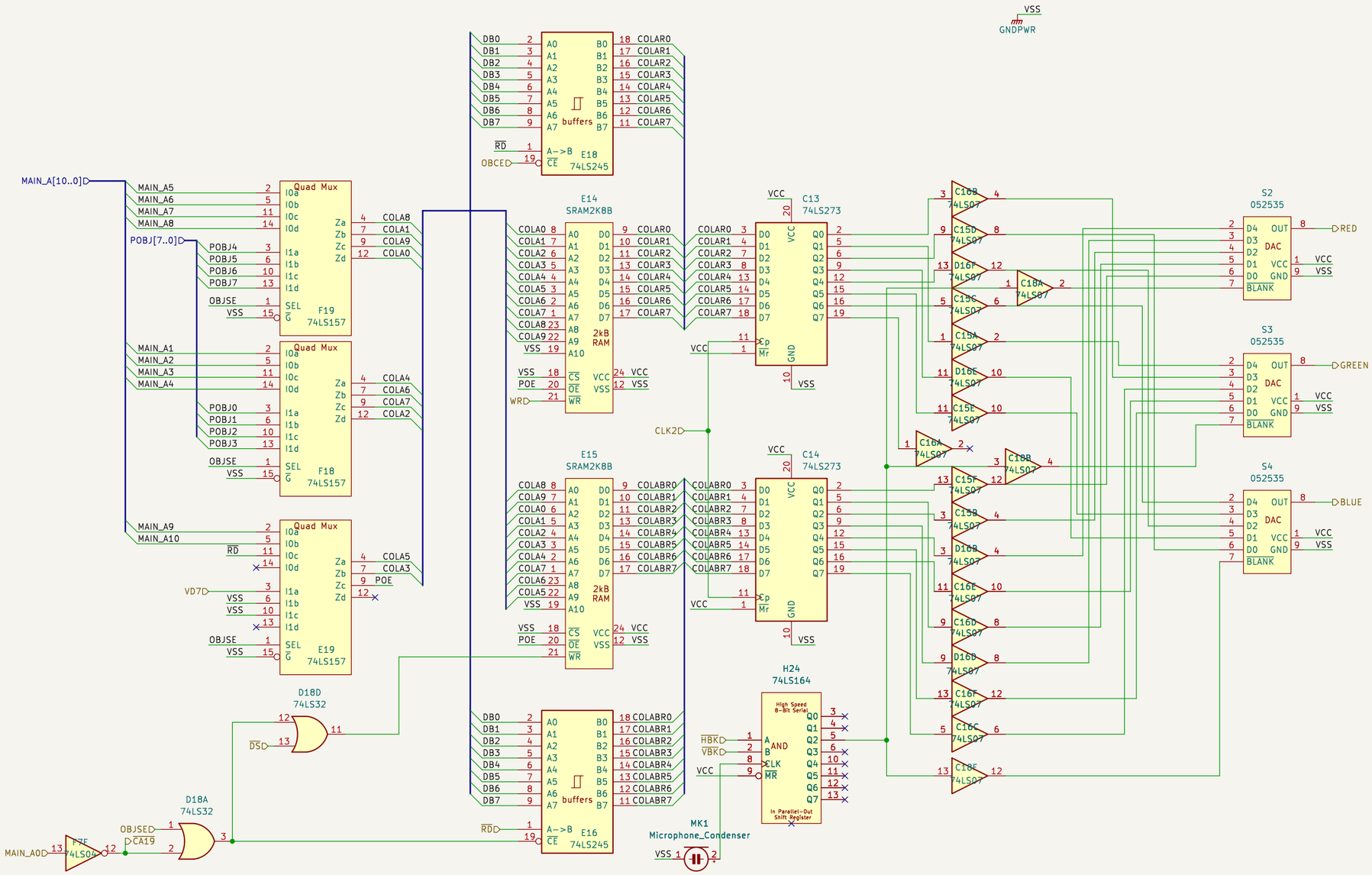

Sheet: /PSAC/RGB/
File: RGB.kicad_sch

Title:

Size: A3	Date:	Rev:
KiCad E.D.A. 8.0.9		Id: 10/9