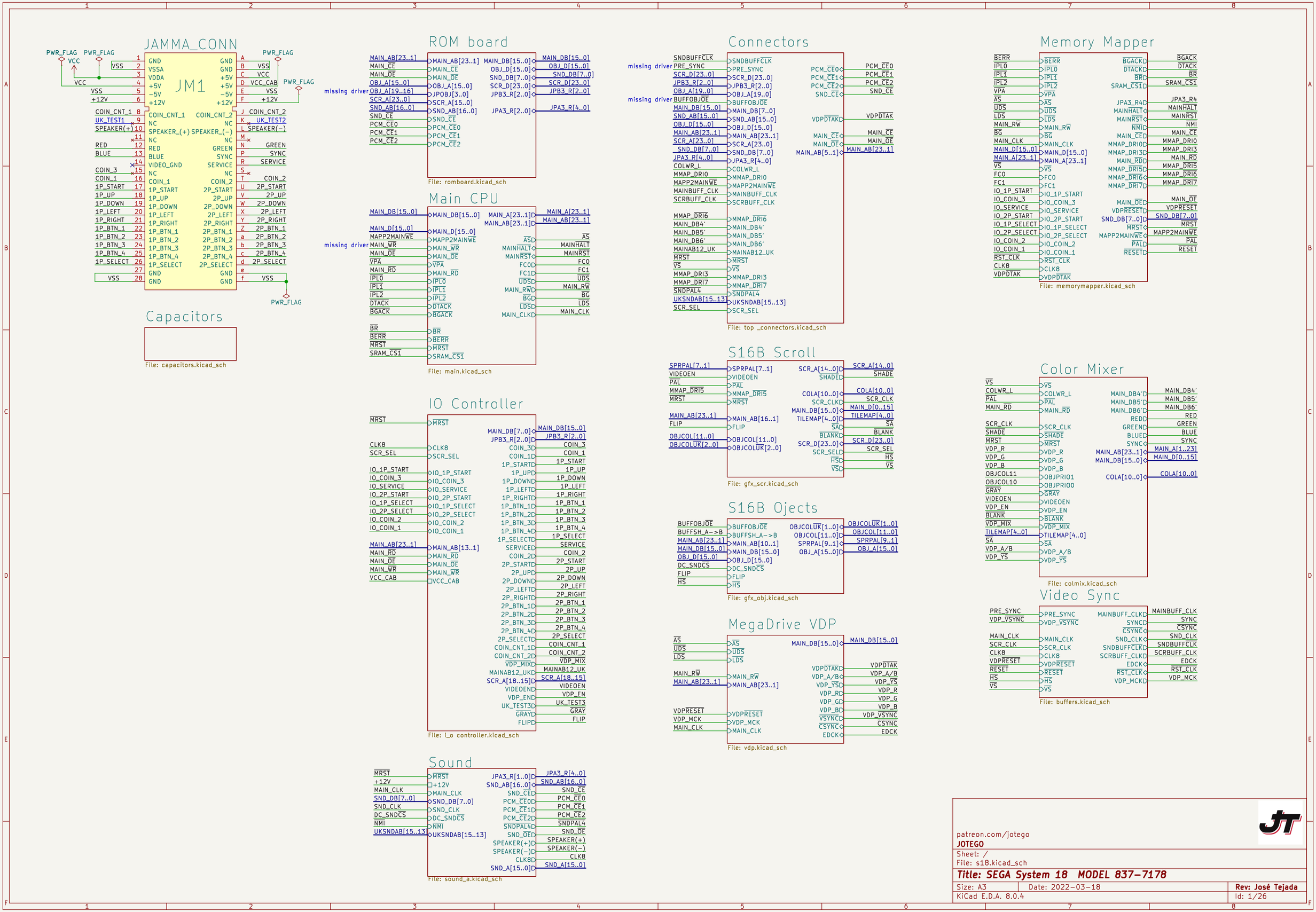
JAMMA_CONN
JM1
ROM board
File: romboard.kicad_sch
Main CPU
File: main.kicad_sch
Capacitors
File: capacitors.kicad_sch
IO Controller
File: i_o controller.kicad_sch
Sound
File: sound_a.kicad_sch
Connectors
File: top _connectors.kicad_sch
S16B Scroll
File: gfx_scr.kicad_sch
S16B Ojects
File: gfx_obj.kicad_sch
MegaDrive VDP
File: vdp.kicad_sch
Memory Mapper
File: memorymapper.kicad_sch
Color Mixer
File: colmix.kicad_sch
Video Sync
File: buffers.kicad_sch
patreon.com/jotego
JOTEGO
Sheet: /
File: s18.kicad_sch
Title: SEGA System 18 MODEL 837-7178
Size: A3
Date: 2022-03-18
Rev: José Tejada
KiCad E.D.A. 8.0.4
Id: 1/26

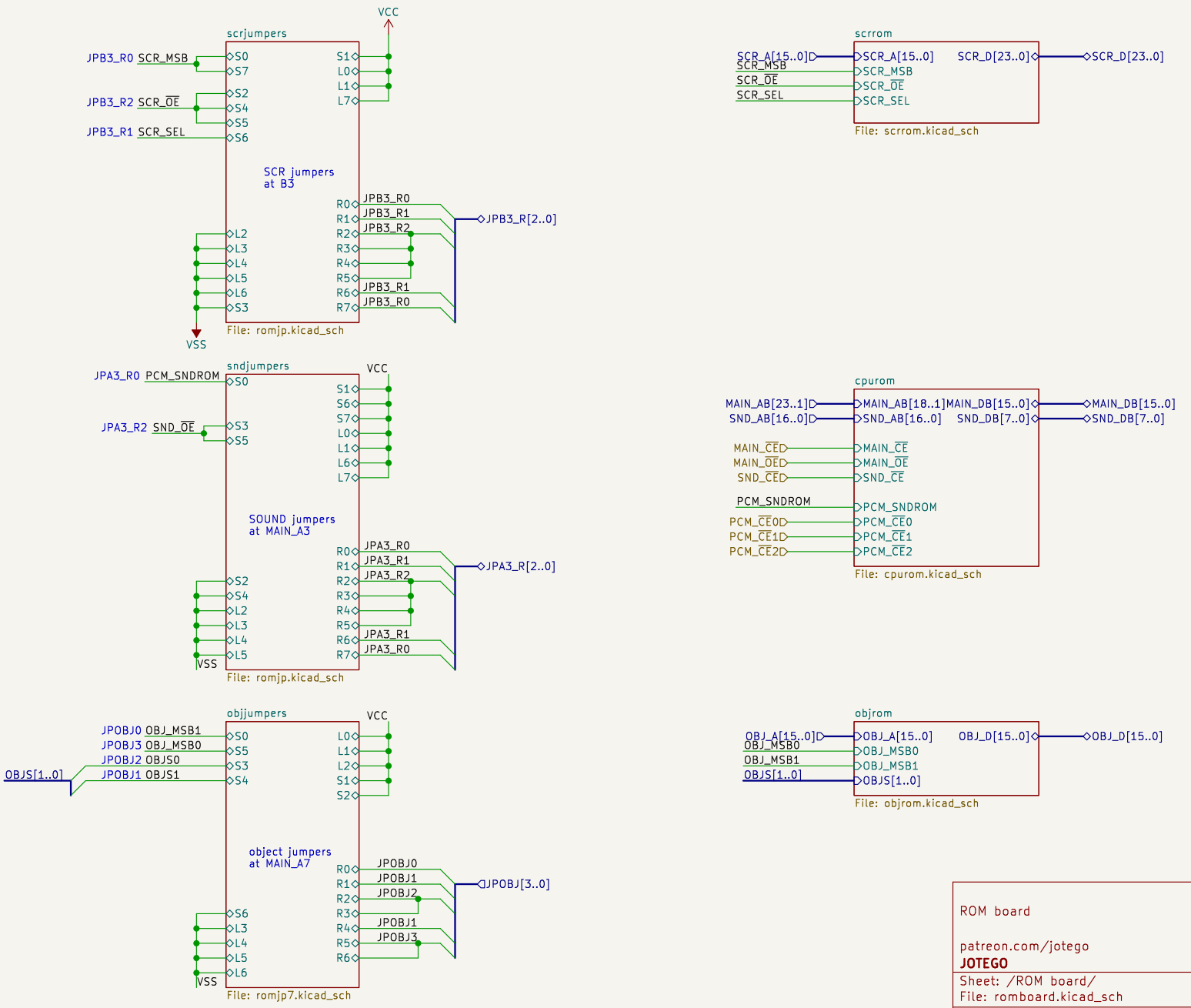

ROM board

patreon.com/jotego

JOTEGO

Sheet: /ROM board/

File: romboard.kicad_sch

Title: SEGA System 18 MODEL 837-7178

Size: A4	Date: 2022-03-18	**Rev: José Tejada**
KiCad E.D.A. 8.0.4		Id: 2/26

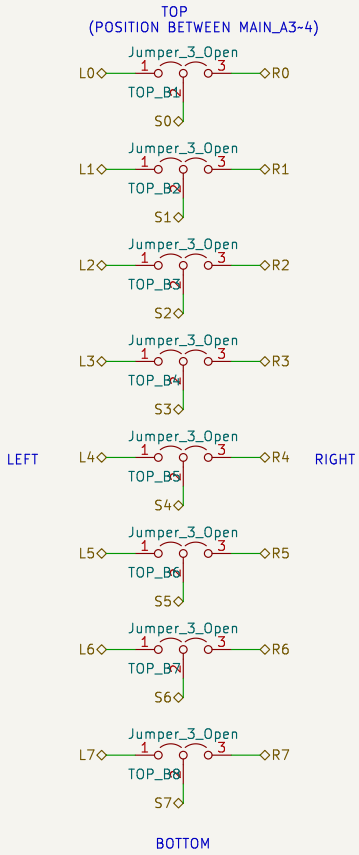

patreon.com/jotego
JOTEGO

Sheet: /ROM board/scrjumpers/
File: romjp.kicad_sch

Title: SEGA System 18 MODEL 837-7178

Size: A4	Date: 2022-03-18	**Rev: José Tejada**
KiCad E.D.A. 8.0.4		Id: 3/26

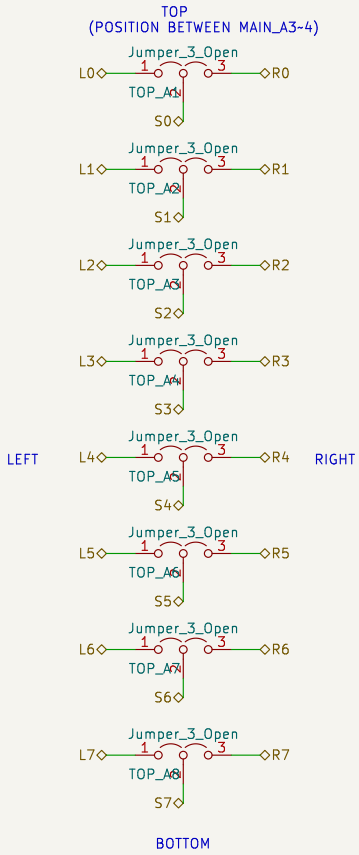

patreon.com/jotego

JOTEGO

Sheet: /ROM board/sndjumpers/

File: romjp.kicad_sch

Title: SEGA System 18 MODEL 837-7178

Size: A4	Date: 2022-03-18	**Rev: José Tejada**
KiCad E.D.A. 8.0.4		Id: 4/26

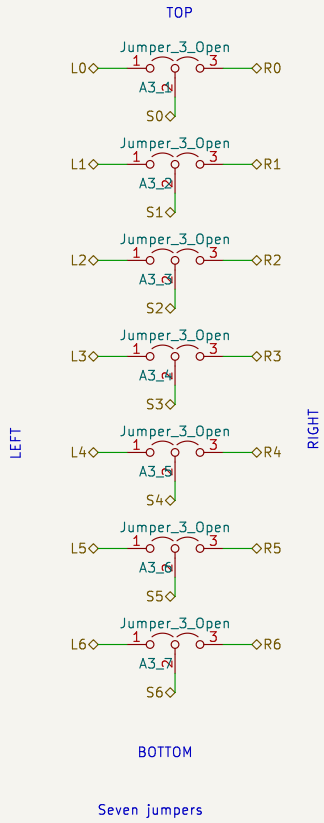

Seven jumpers

patreon.com/jotego
JOTEGO

Sheet: /ROM board/objjumpers/
File: romjp7.kicad_sch

Title: SEGA System 18 MODEL 837-7178

Size: A4	Date: 2022-03-18	**Rev: José Tejada**
KiCad E.D.A. 8.0.4		Id: 5/26

SCROLL ROM

Scroll ROM. 64kB*6=384kB

patreon.com/jotego

JOTEGO

Sheet: /ROM board/scrrom/

File: scrrom.kicad_sch

Title: SEGA System 18 MODEL 837-7178

Size: A4	Date: 2022-03-18	**Rev: José Tejada**
KiCad E.D.A. 8.0.4		Id: 6/26

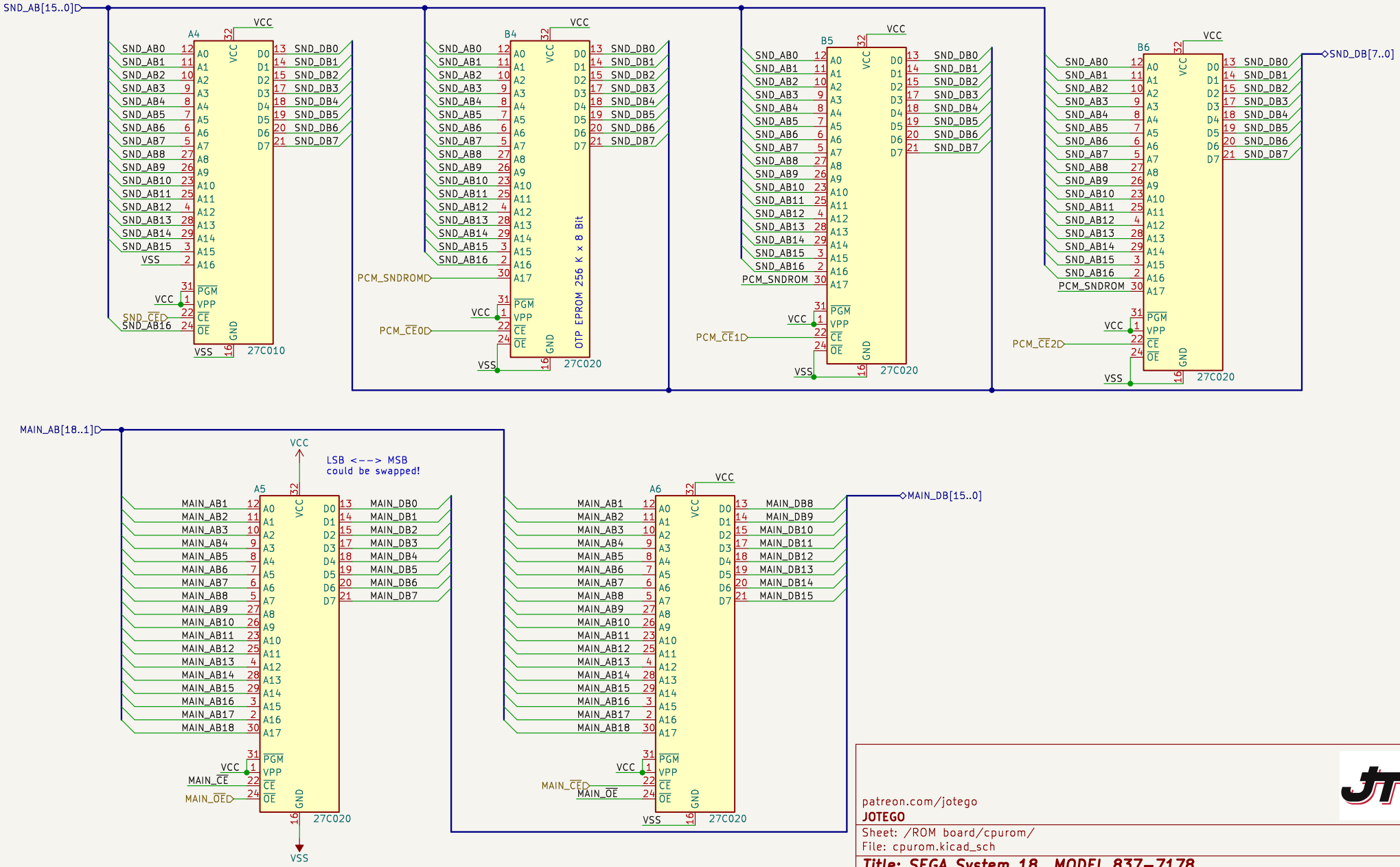

patreon.com/jotego

JOTEGO

Sheet: /ROM board/cpurom/

File: cpurom.kicad_sch

Title: SEGA System 18 MODEL 837-7178

Size: A4	Date: 2022-03-18	**Rev: José Tejada**
KiCad E.D.A. 8.0.4		Id: 7/26

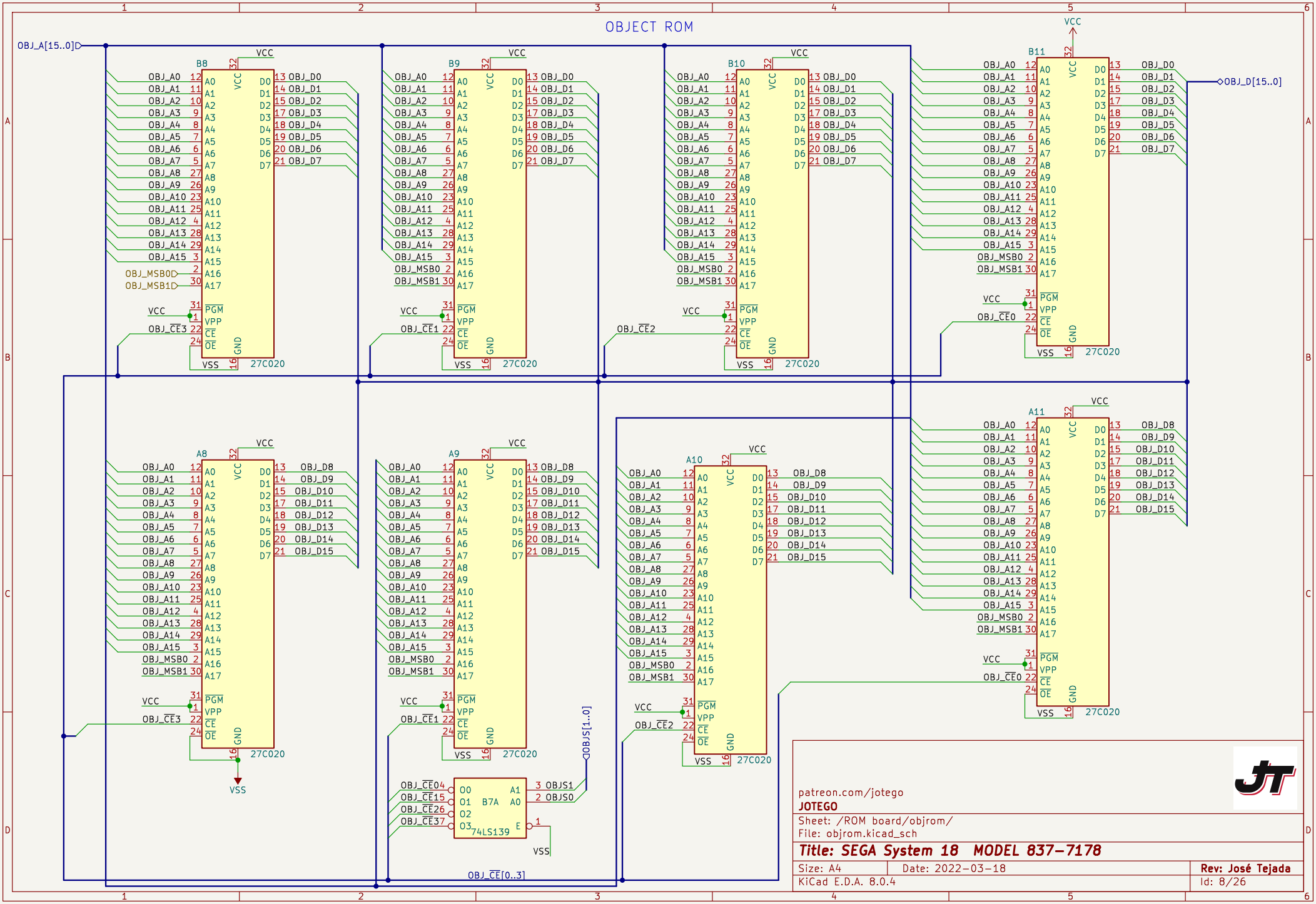
OBJECT ROM
OBJ_A[15..0]
OBJ_D[15..0]
B8
B9
B10
B11
A8
A9
A10
A11
27C020
B7A
74LS139
OBJS[1..0]
OBJ_CE[0..3]
OBJ_CE0
OBJ_CE1
OBJ_CE2
OBJ_CE3
OBJ_MSB0
OBJ_MSB1
VCC
VSS
patreon.com/jotego
JOTEGO
Sheet: /ROM board/objrom/
File: objrom.kicad_sch
Title: SEGA System 18 MODEL 837-7178
Size: A4
Date: 2022-03-18
Rev: José Tejada
KiCad E.D.A. 8.0.4
Id: 8/26

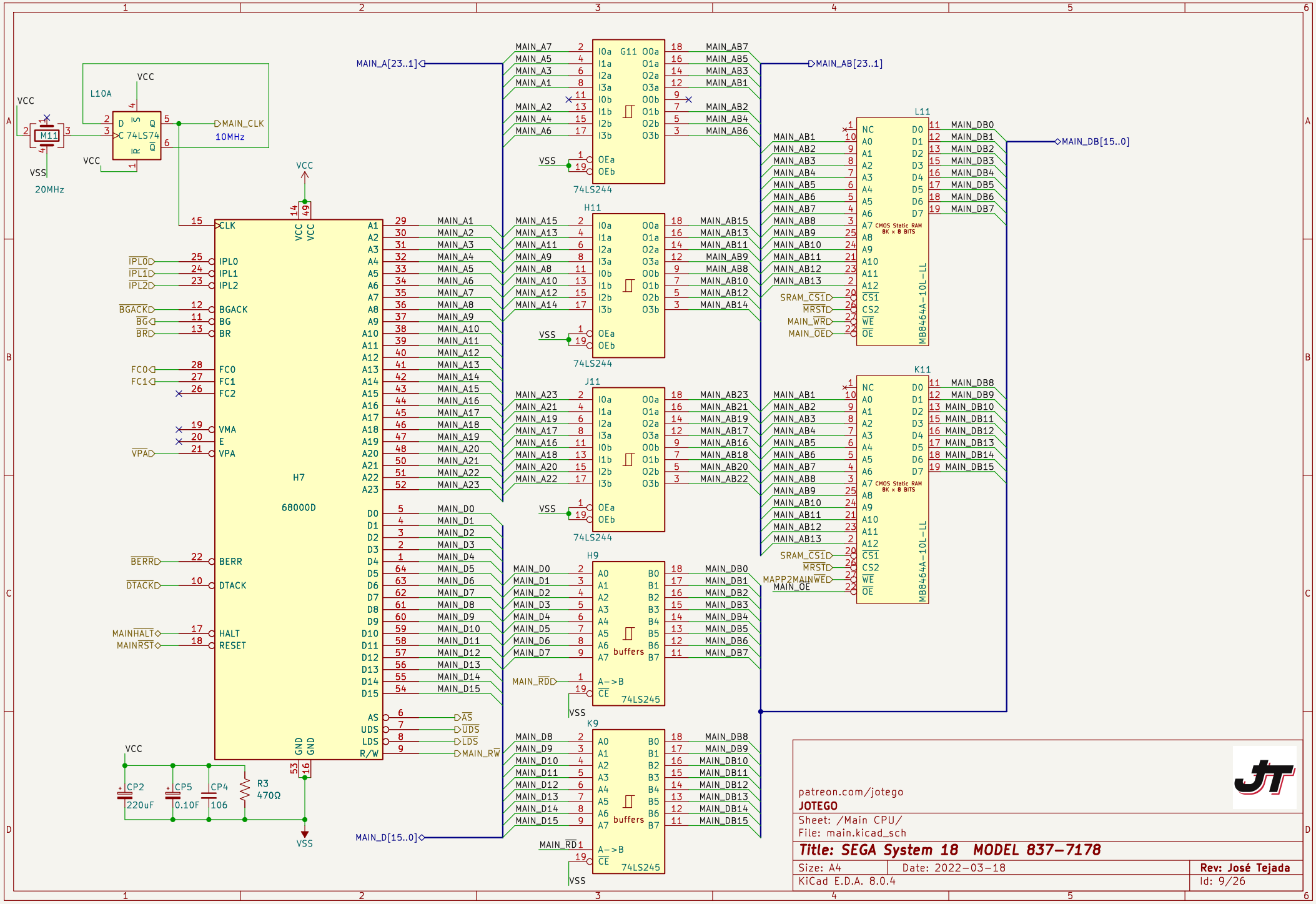
L10A
74LS74
M11
20MHz
10MHz
MAIN_CLK
VCC
VSS
MAIN_A[23..1]
MAIN_AB[23..1]
MAIN_DB[15..0]
MAIN_D[15..0]
H7
68000D
CLK
IPL0
IPL1
IPL2
BGACK
BG
BR
FC0
FC1
FC2
VMA
E
VPA
BERR
DTACK
HALT
RESET
MAINHALT
MAINRST
AS
UDS
LDS
R/W
MAIN_RW
H11
J11
74LS244
H9
K9
74LS245
buffers
A->B
CE
MAIN_RD
L11
K11
MB8464A-10L-LL
CMOS Static RAM
8K x 8 BITS
SRAM_CS1
MRST
MAIN_WR
MAIN_OE
MAPP2MAINWE
CP2
220uF
CP5
0.10F
CP4
106
R3
470Ω
patreon.com/jotego
JOTEGO
Sheet: /Main CPU/
File: main.kicad_sch
Title: SEGA System 18 MODEL 837-7178
Size: A4
Date: 2022-03-18
Rev: José Tejada
KiCad E.D.A. 8.0.4
Id: 9/26

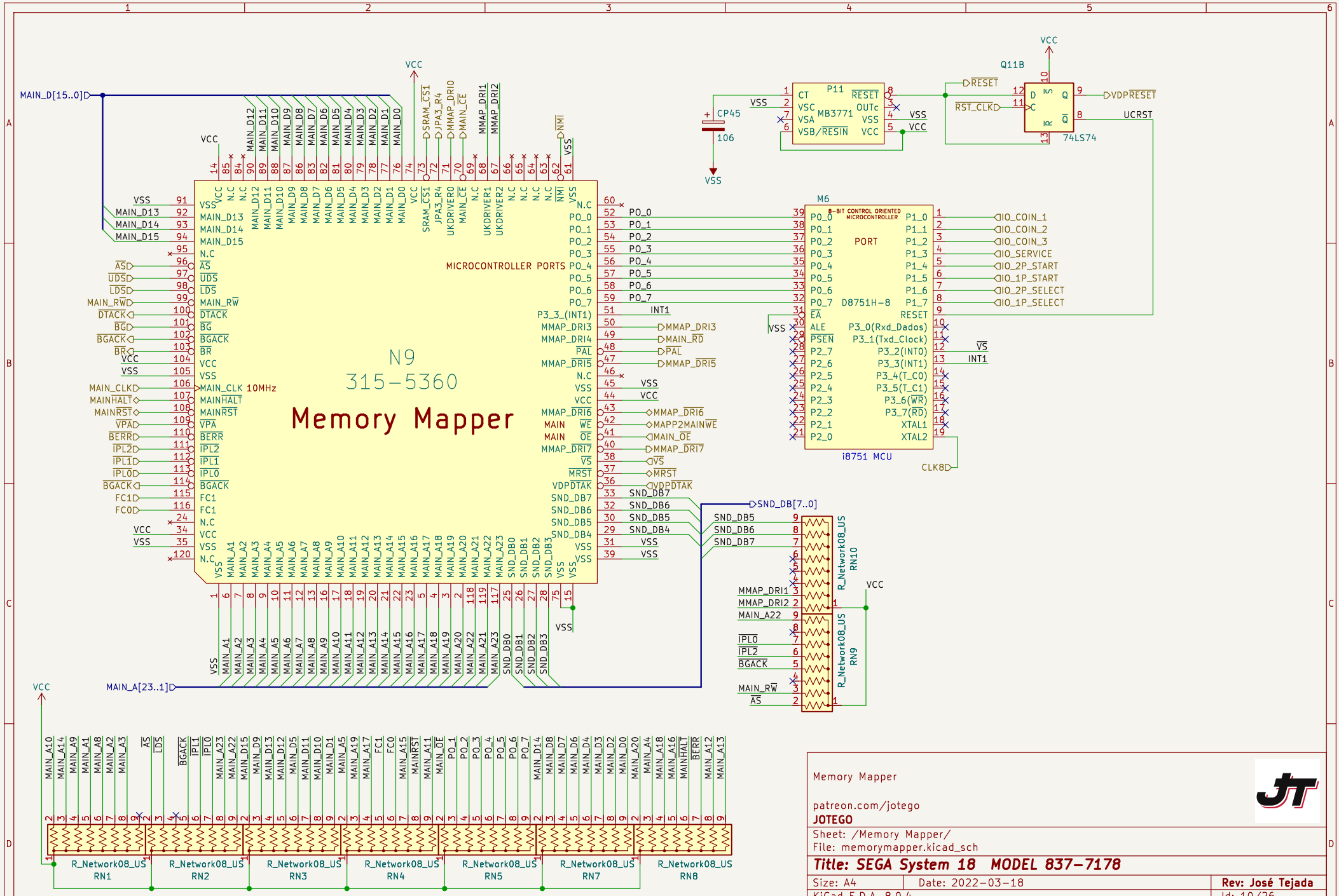

Memory Mapper

patreon.com/jotego

JOTEGO

Sheet: /Memory Mapper/

File: memorymapper.kicad_sch

Title: SEGA System 18 MODEL 837-7178

Size: A4	Date: 2022-03-18	**Rev: José Tejada**
KiCad E.D.A. 8.0.4		Id: 10/26

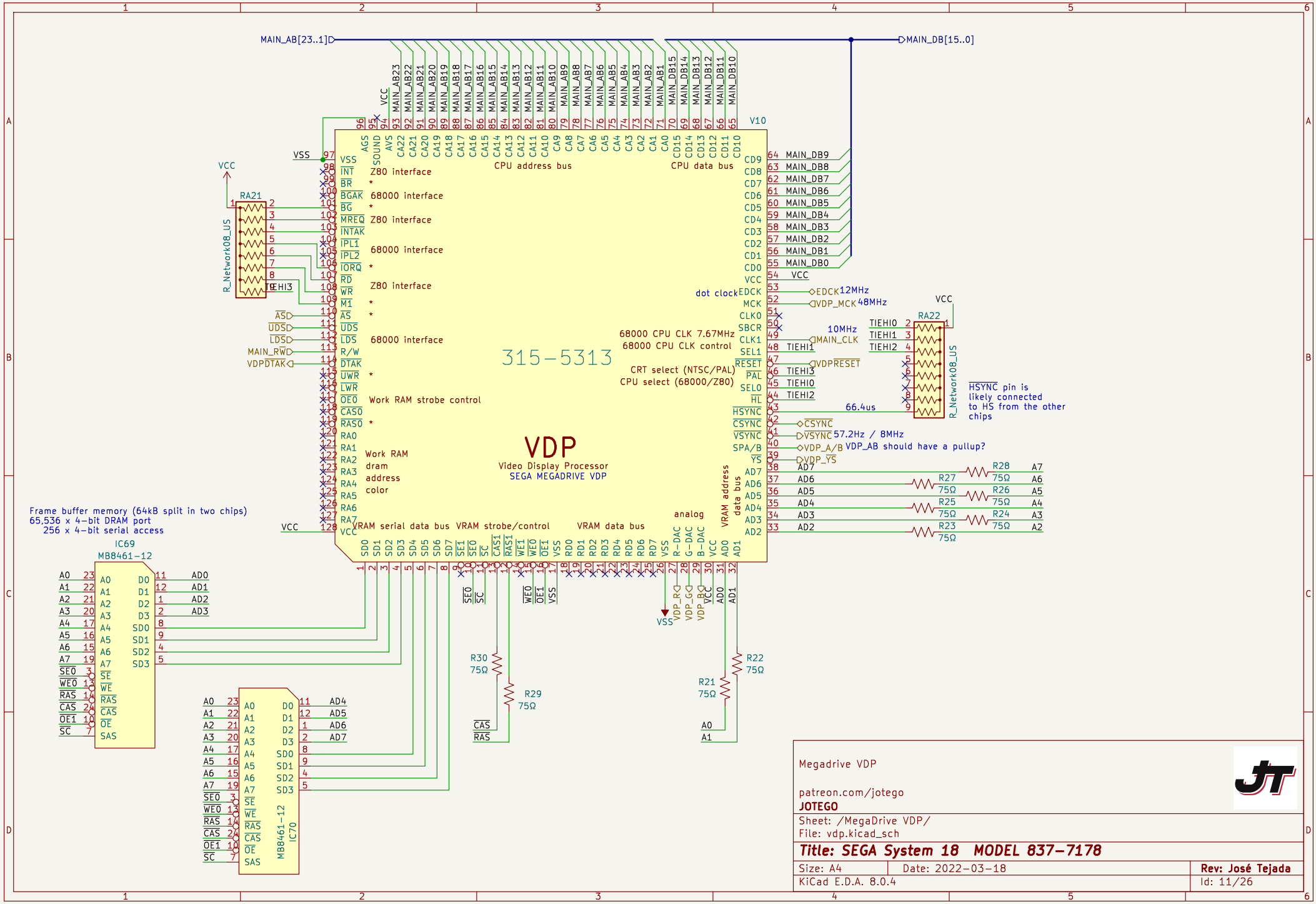
MAIN_AB[23..1]
MAIN_DB[15..0]
315-5313
VDP
Video Display Processor
SEGA MEGADRIVE VDP
CPU address bus
CPU data bus
Z80 interface
68000 interface
Work RAM strobe control
Work RAM
dram
address
color
VRAM serial data bus
VRAM strobe/control
VRAM data bus
VRAM address
data bus
analog
68000 CPU CLK 7.67MHz
68000 CPU CLK control
CRT select (NTSC/PAL)
CPU select (68000/Z80)
dot clock
12MHz
48MHz
10MHz
66.4us
57.2Hz / 8MHz
VDP_AB should have a pullup?
HSYNC pin is
likely connected
to HS from the other
chips
Frame buffer memory (64kB split in two chips)
65,536 x 4-bit DRAM port
256 x 4-bit serial access
IC69
MB8461-12
IC70
RA21
RA22
R_Network08_US
Megadrive VDP
patreon.com/jotego
JOTEGO
Sheet: /MegaDrive VDP/
File: vdp.kicad_sch
Title: SEGA System 18 MODEL 837-7178
Size: A4
Date: 2022-03-18
Rev: José Tejada
KiCad E.D.A. 8.0.4
Id: 11/26

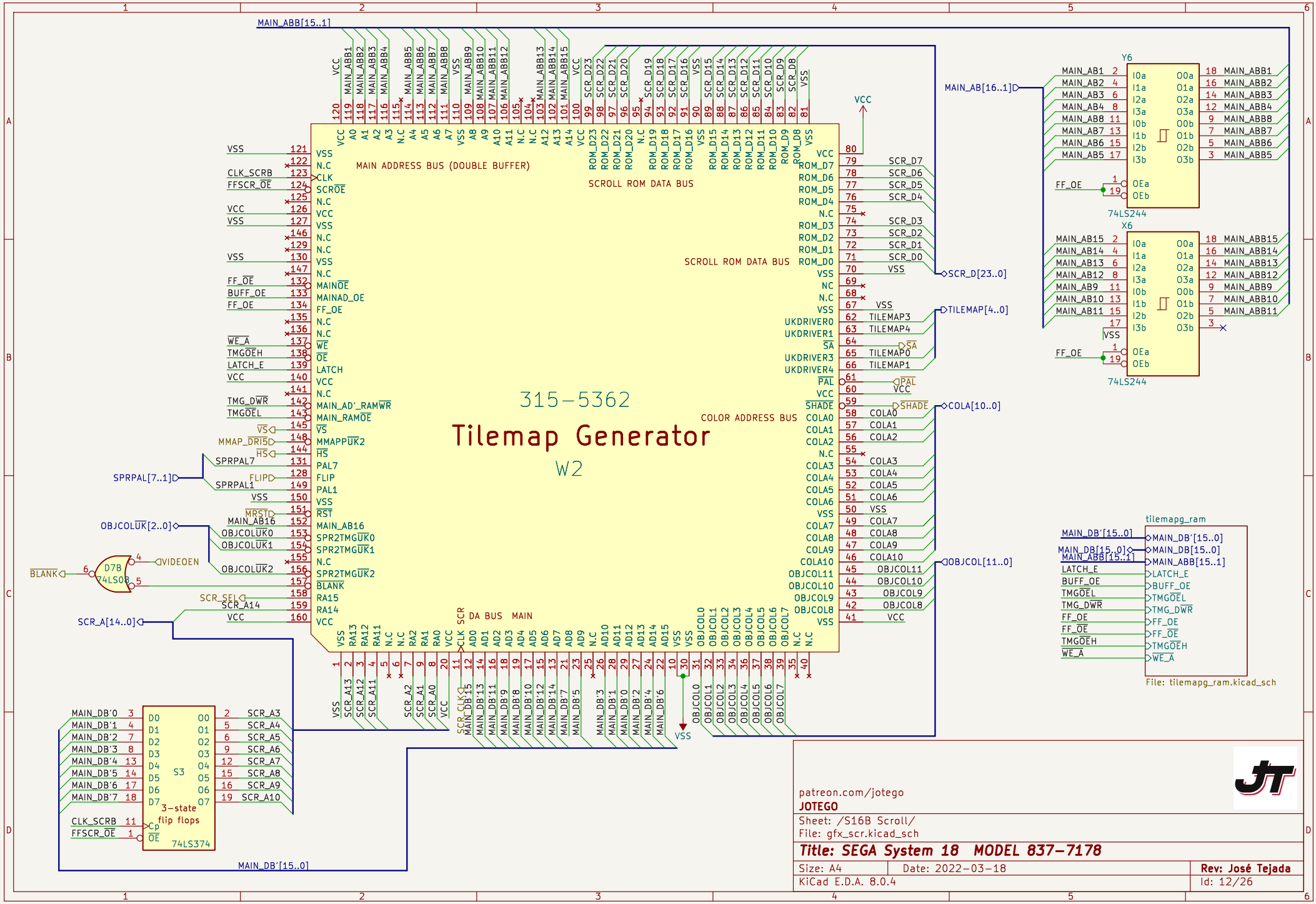
315-5362
Tilemap Generator
W2
MAIN ADDRESS BUS (DOUBLE BUFFER)
SCROLL ROM DATA BUS
COLOR ADDRESS BUS
DA BUS MAIN
MAIN_ABB[15..1]
MAIN_AB[16..1]
SCR_D[23..0]
TILEMAP[4..0]
COLA[10..0]
OBJCOL[11..0]
SPRPAL[7..1]
OBJCOLUK[2..0]
SCR_A[14..0]
MAIN_DB'[15..0]
Y6
X6
74LS244
tilemapg_ram
File: tilemapg_ram.kicad_sch
D7B
74LS08
S3
3-state
flip flops
74LS374
patreon.com/jotego
JOTEGO
Sheet: /S16B Scroll/
File: gfx_scr.kicad_sch
Title: SEGA System 18 MODEL 837-7178
Size: A4
Date: 2022-03-18
Rev: José Tejada
KiCad E.D.A. 8.0.4
Id: 12/26

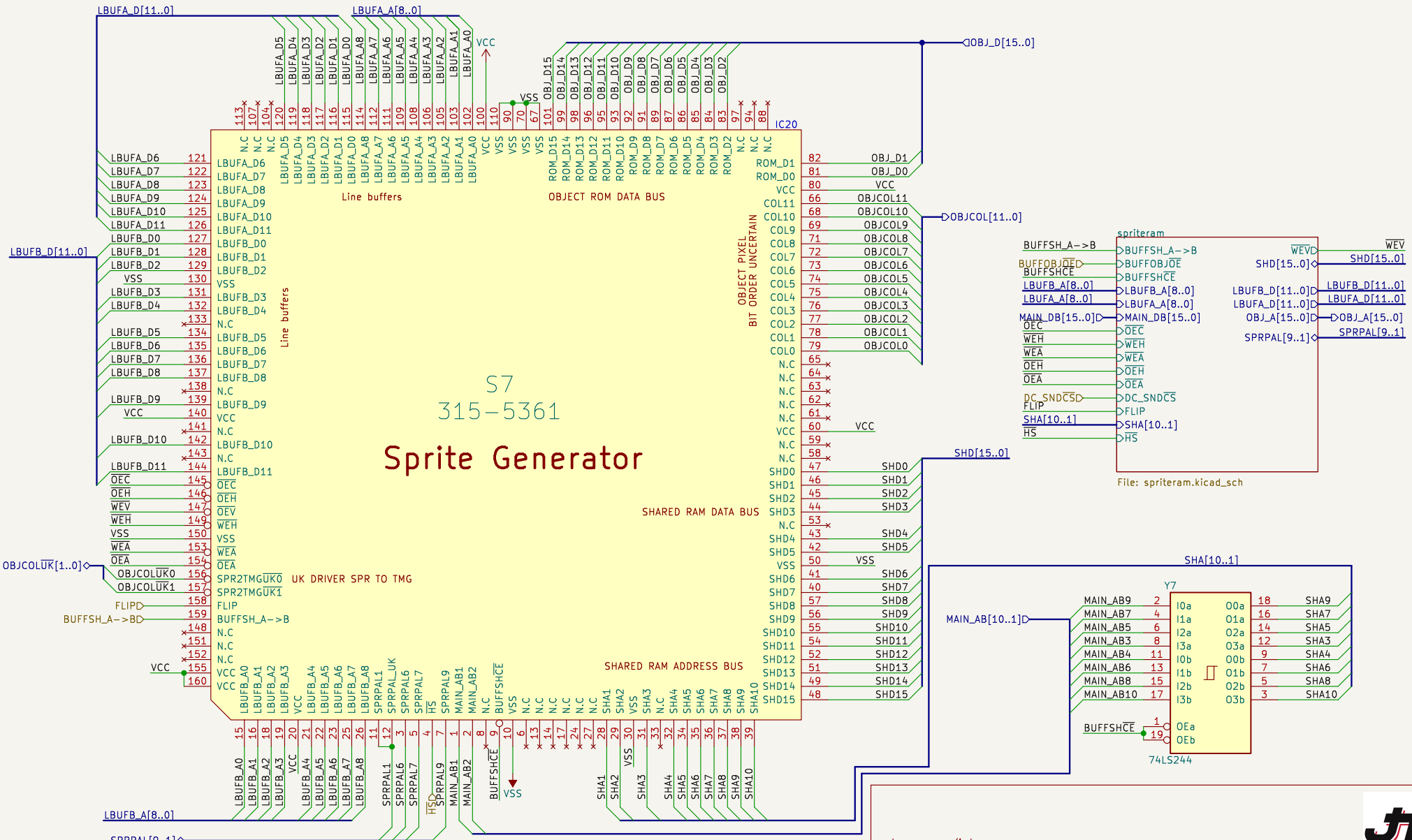

patreon.com/jotego

JOTEGO

Sheet: /S16B Ojects/

File: gfx_obj.kicad_sch

Title: SEGA System 18 MODEL 837-7178

Size: A4	Date: 2022-03-18	**Rev: José Tejada**
KiCad E.D.A. 8.0.4		Id: 13/26

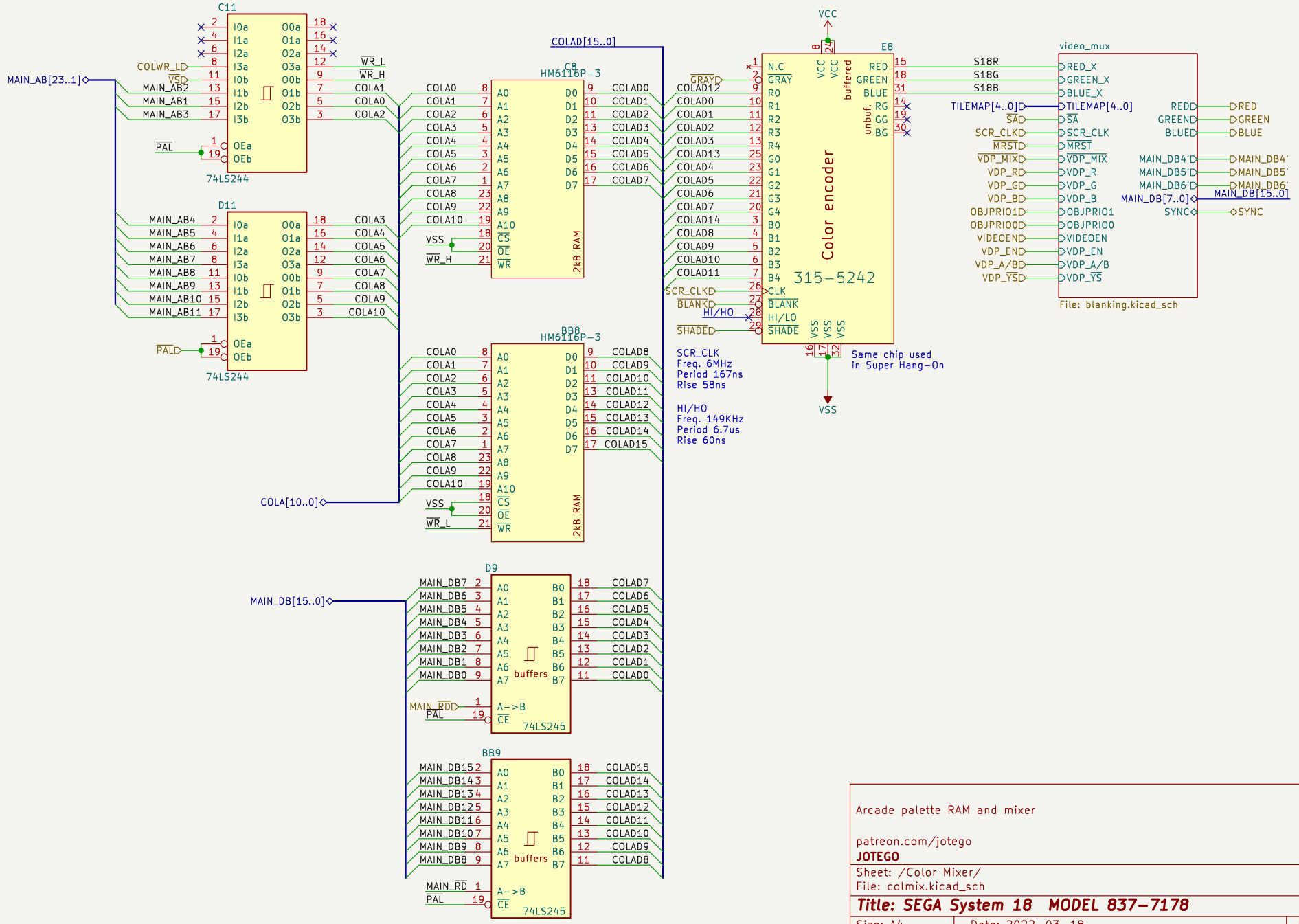

Arcade palette RAM and mixer

patreon.com/jotego

JOTEGO

Sheet: /Color Mixer/
File: colmix.kicad_sch

Title: SEGA System 18 MODEL 837-7178

Size: A4	Date: 2022-03-18	**Rev: José Tejada**
KiCad E.D.A. 8.0.4		Id: 14/26

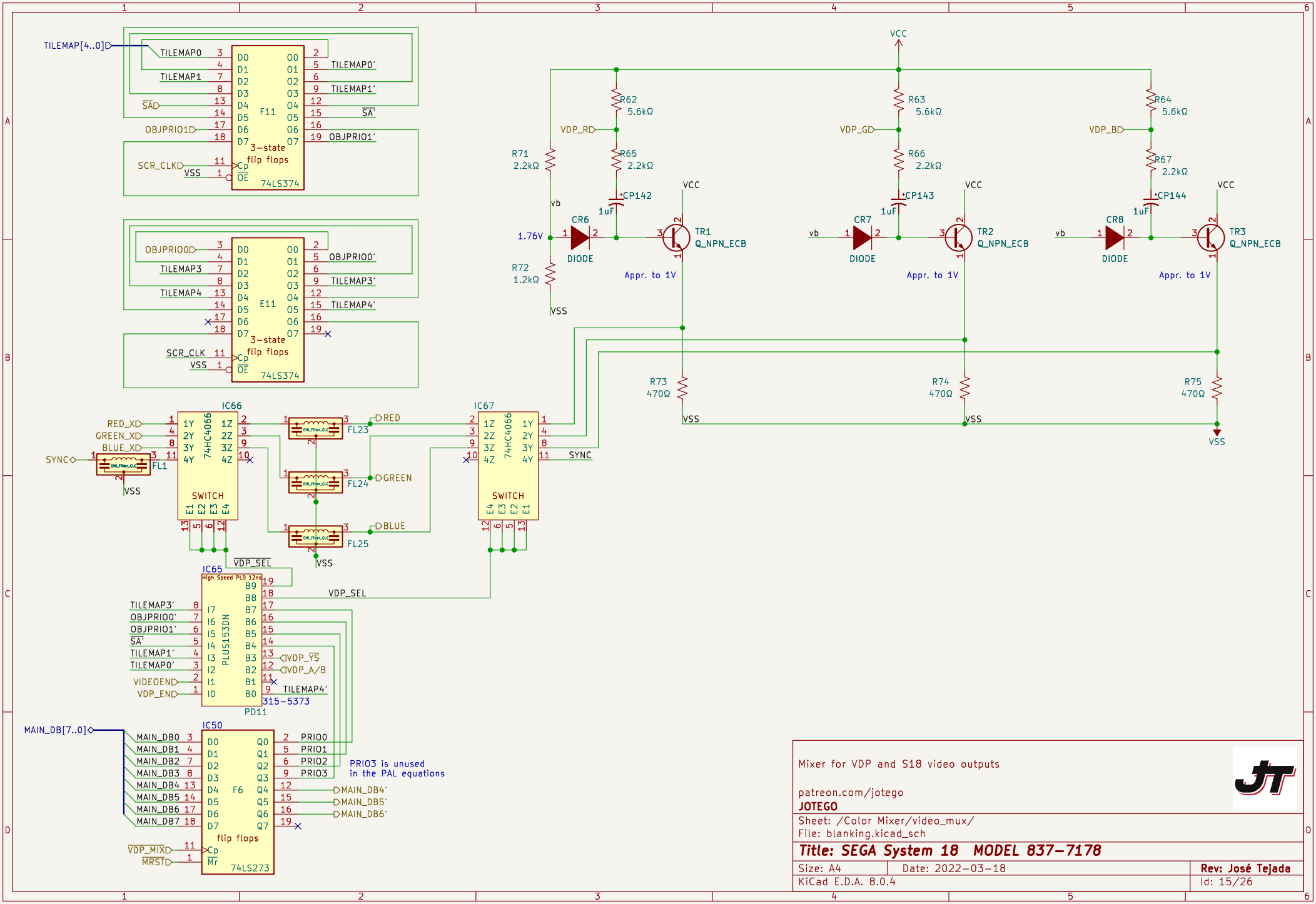
TILEMAP[4..0]
TILEMAP0
TILEMAP1
SA
OBJPRIO1
SCR_CLK
VSS
F11
3-state flip flops
74LS374
TILEMAP0'
TILEMAP1'
SA'
OBJPRIO1'
OBJPRIO0
TILEMAP3
TILEMAP4
E11
OBJPRIO0'
TILEMAP3'
TILEMAP4'
VCC
R62 5.6kΩ
R63 5.6kΩ
R64 5.6kΩ
VDP_RD
VDP_GD
VDP_BD
R65 2.2kΩ
R66 2.2kΩ
R67 2.2kΩ
R71 2.2kΩ
R72 1.2kΩ
CP142 1uF
CP143 1uF
CP144 1uF
vb
1.76V
CR6
CR7
CR8
DIODE
TR1 Q_NPN_ECB
TR2 Q_NPN_ECB
TR3 Q_NPN_ECB
Appr. to 1V
R73 470Ω
R74 470Ω
R75 470Ω
IC66
IC67
74HC4066
SWITCH
RED_X
GREEN_X
BLUE_X
SYNC
FL1
FL23
FL24
FL25
RED
GREEN
BLUE
VDP_SEL
IC65
High Speed PLD 12ns
PLUS153DN
PD11
315-5373
VDP_YS
VDP_A/B
VIDEOEN
VDP_EN
MAIN_DB[7..0]
IC50
F6
flip flops
74LS273
MAIN_DB0
MAIN_DB1
MAIN_DB2
MAIN_DB3
MAIN_DB4
MAIN_DB5
MAIN_DB6
MAIN_DB7
PRIO0
PRIO1
PRIO2
PRIO3
PRIO3 is unused in the PAL equations
MAIN_DB4'
MAIN_DB5'
MAIN_DB6'
VDP_MIX
MRST
Mixer for VDP and S18 video outputs
patreon.com/jotego
JOTEGO
Sheet: /Color Mixer/video_mux/
File: blanking.kicad_sch
Title: SEGA System 18 MODEL 837-7178
Size: A4
Date: 2022-03-18
Rev: José Tejada
KiCad E.D.A. 8.0.4
Id: 15/26

patreon.com/jotego

JOTEGO

Sheet: /Capacitors/

File: capacitors.kicad_sch

Title: SEGA System 18 MODEL 837-7178

Size: A4	Date: 2022-03-18	**Rev: José Tejada**
KiCad E.D.A. 8.0.4		Id: 16/26

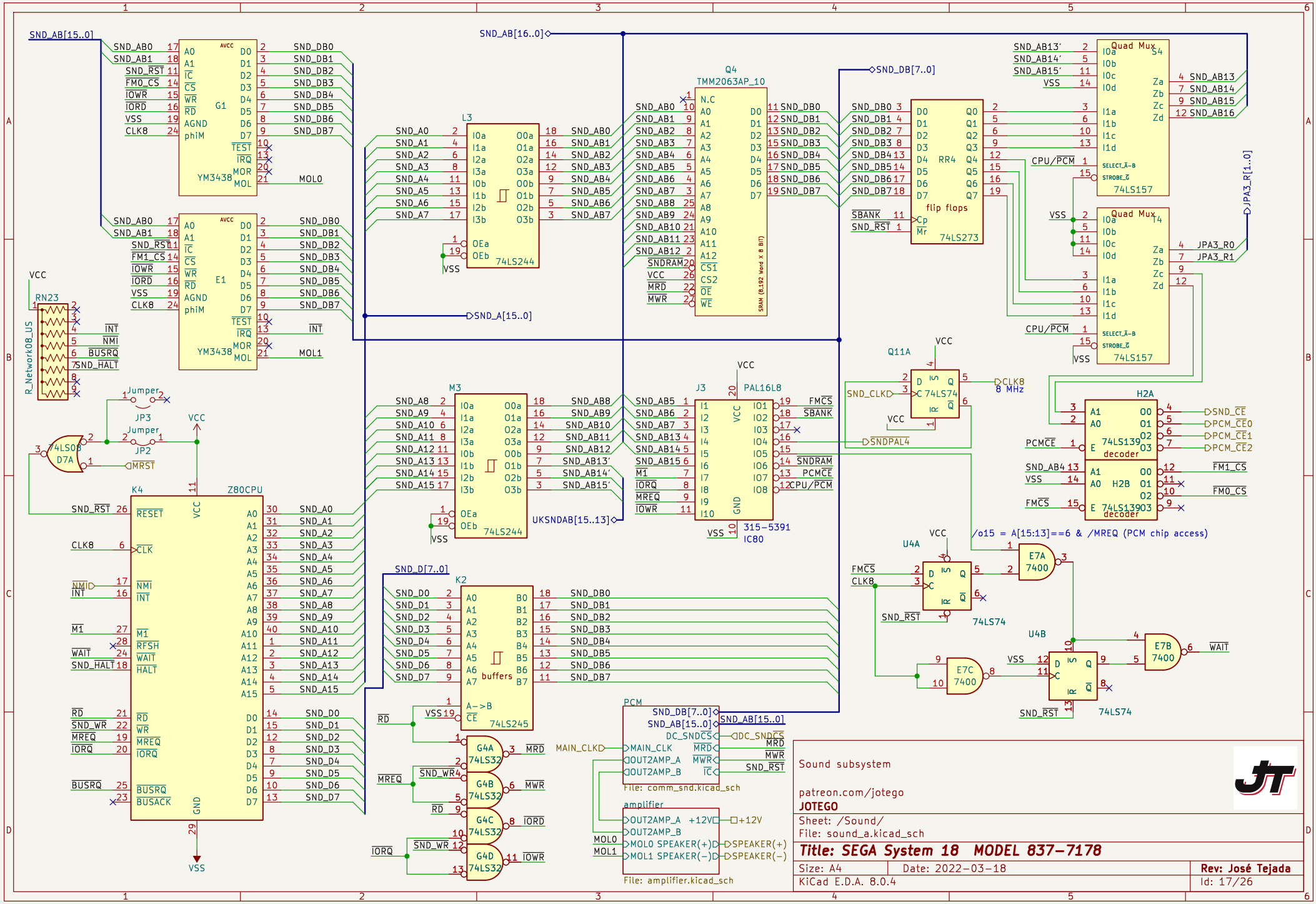
SND_AB[15..0]
SND_AB[16..0]
G1
YM3438
E1
YM3438
L3
74LS244
Q4
TMM2063AP_10
SRAM (8,192 Word X 8 Bit)
SND_A[15..0]
SND_DB[7..0]
RR4
flip flops
74LS273
Quad Mux
74LS157
Quad Mux
74LS157
JPA3_R[1..0]
RN23
R_Network08_US
VCC
Jumper
JP3
JP2
74LS08
D7A
MRST
K4
Z80CPU
M3
74LS244
J3
PAL16L8
315-5391
IC80
UKSNDAB[15..13]
Q11A
74LS74
CLK8
8 MHz
SNDPAL4
H2A
74LS139
decoder
H2B
74LS139
decoder
/o15 = A[15:13]==6 & /MREQ (PCM chip access)
U4A
74LS74
E7A
7400
E7C
7400
U4B
74LS74
E7B
7400
SND_D[7..0]
K2
buffers
74LS245
G4A
74LS32
G4B
74LS32
G4C
74LS32
G4D
74LS32
PCM
File: comm_snd.kicad_sch
amplifier
File: amplifier.kicad_sch
Sound subsystem
patreon.com/jotego
JOTEGO
Sheet: /Sound/
File: sound_a.kicad_sch
Title: SEGA System 18 MODEL 837-7178
Size: A4
Date: 2022-03-18
KiCad E.D.A. 8.0.4
Rev: José Tejada
Id: 17/26

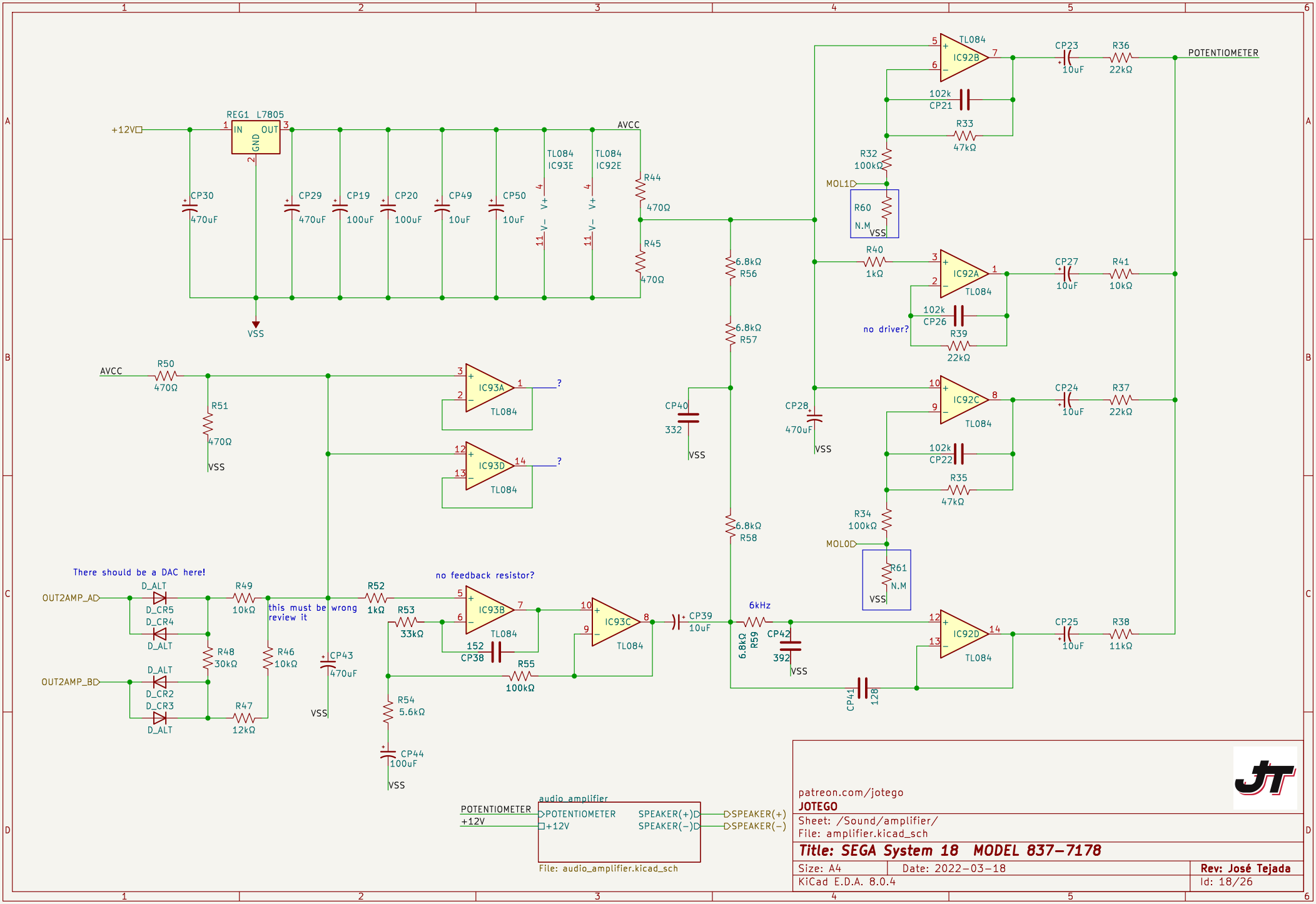
+12V
REG1 L7805
IN
OUT
GND
CP30 470uF
CP29 470uF
CP19 100uF
CP20 100uF
CP49 10uF
CP50 10uF
TL084 IC93E
TL084 IC92E
AVCC
R44 470Ω
R45 470Ω
VSS
R50 470Ω
R51 470Ω
IC93A TL084
IC93D TL084
?
6.8kΩ R56
6.8kΩ R57
6.8kΩ R58
CP40 332
CP28 470uF
TL084 IC92B
CP23 10uF
R36 22kΩ
POTENTIOMETER
102k CP21
R33 47kΩ
R32 100kΩ
MOL1
R60 N.M
R40 1kΩ
IC92A TL084
CP27 10uF
R41 10kΩ
102k CP26
no driver?
R39 22kΩ
IC92C TL084
CP24 10uF
R37 22kΩ
102k CP22
R35 47kΩ
R34 100kΩ
MOL0
R61 N.M
IC92D TL084
CP25 10uF
R38 11kΩ
CP41 128
There should be a DAC here!
OUT2AMP_A
OUT2AMP_B
D_ALT
D_CR5
D_CR4
D_CR2
D_CR3
R49 10kΩ
R48 30kΩ
R46 10kΩ
R47 12kΩ
this must be review it
wrong
R52 1kΩ
R53 33kΩ
no feedback resistor?
IC93B TL084
152 CP38
R55 100kΩ
CP43 470uF
R54 5.6kΩ
CP44 100uF
IC93C TL084
CP39 10uF
6kHz
6.8kΩ R59
CP42 392
audio amplifier
POTENTIOMETER
+12V
SPEAKER(+)
SPEAKER(−)
File: audio_amplifier.kicad_sch
patreon.com/jotego
JOTEGO
Sheet: /Sound/amplifier/
File: amplifier.kicad_sch
Title: SEGA System 18 MODEL 837-7178
Size: A4
Date: 2022-03-18
Rev: José Tejada
KiCad E.D.A. 8.0.4
Id: 18/26

MOTHER AND DAUGHTER PCB CONNECTORS

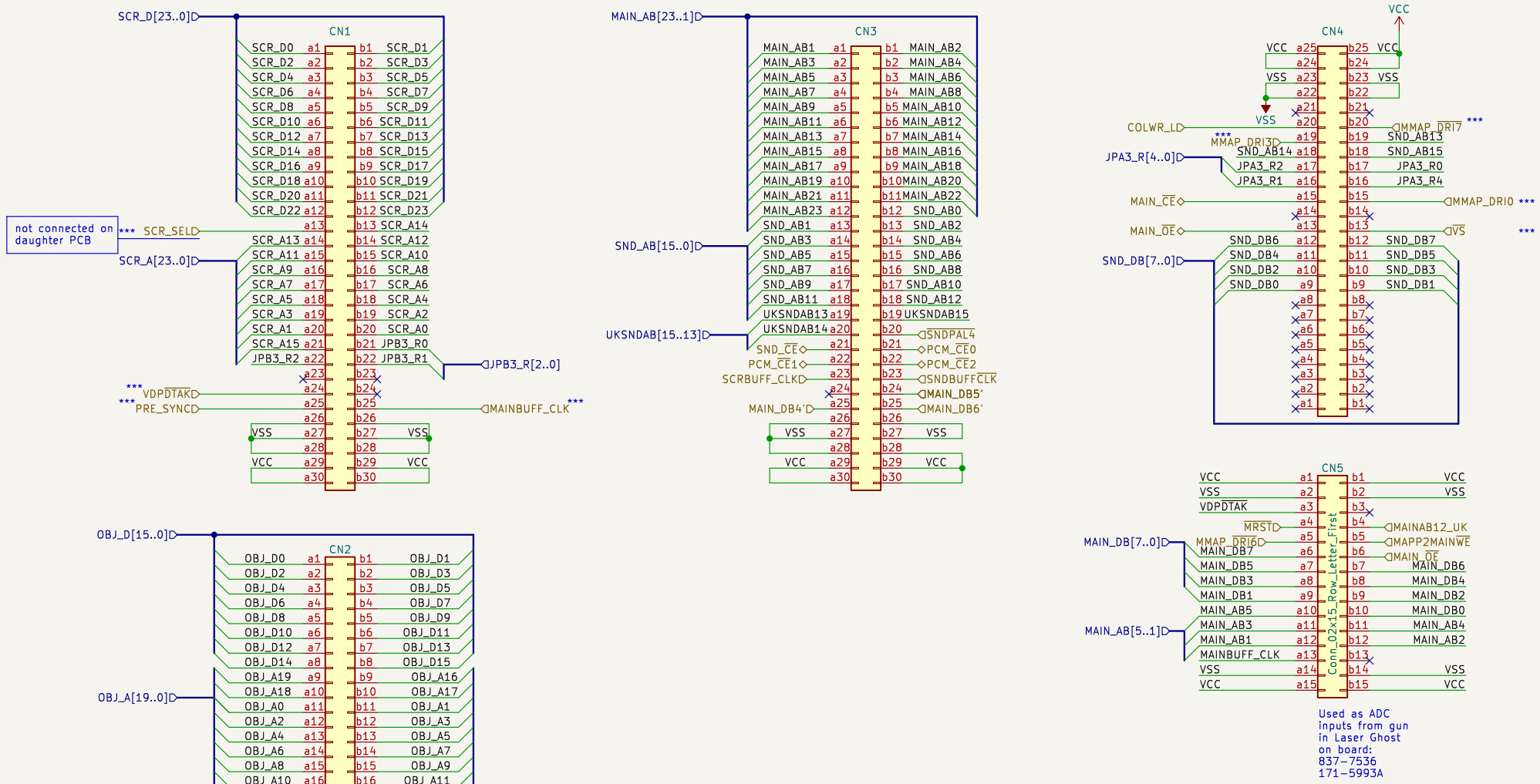

patreon.com/jotego
JOTEGO

Sheet: /Connectors/
File: top _connectors.kicad_sch

Title: SEGA System 18 MODEL 837-7178

Size: A4	Date: 2022-03-18	**Rev: José Tejada**
KiCad E.D.A. 8.0.4		Id: 19/26

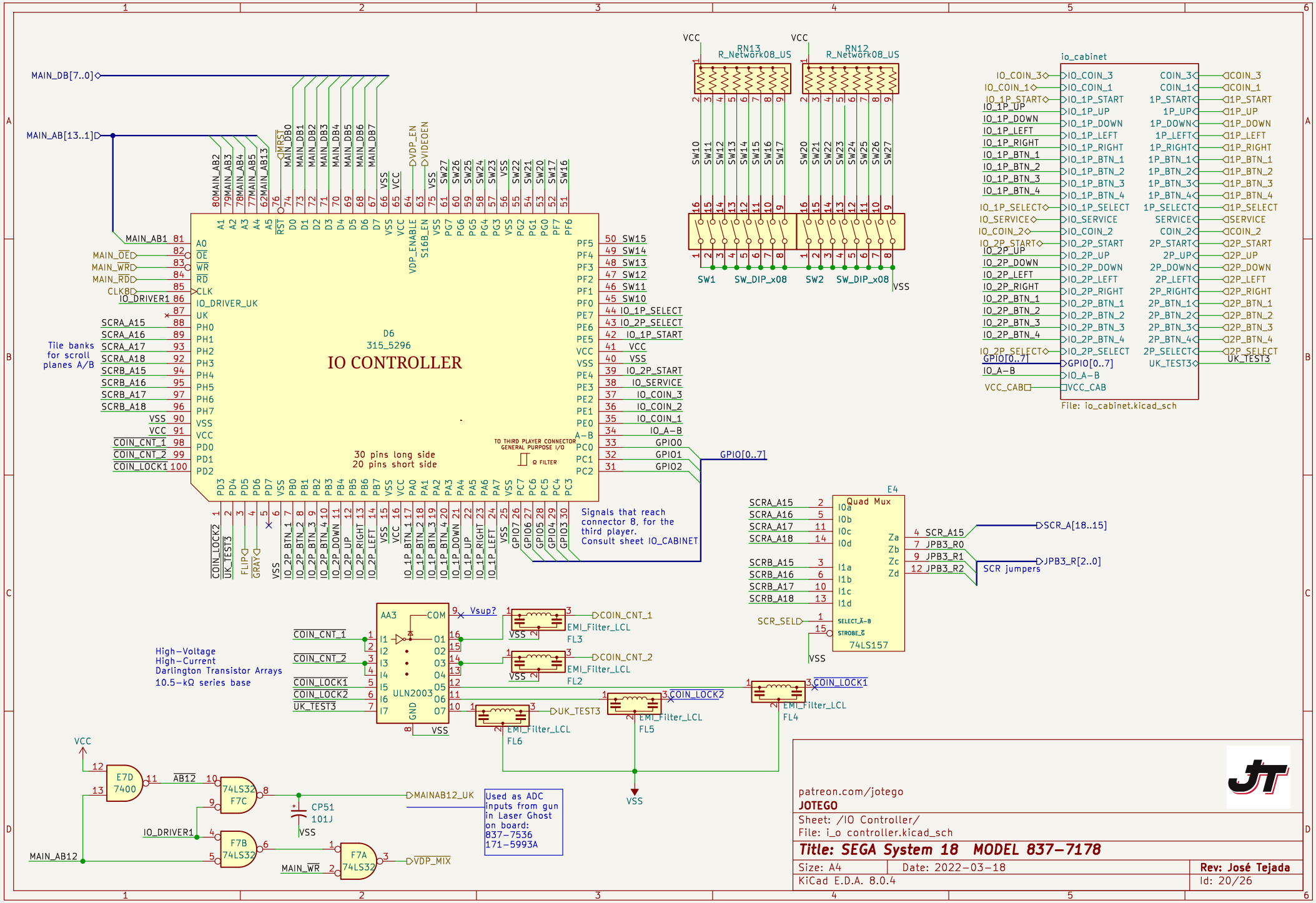
D6
315_5296
IO CONTROLLER
30 pins long side
20 pins short side
Tile banks for scroll planes A/B
TO THIRD PLAYER CONNECTOR GENERAL PURPOSE I/O
Q FILTER
Signals that reach connector 8, for the third player. Consult sheet IO_CABINET
GPIO[0..7]
MAIN_DB[7..0]
MAIN_AB[13..1]
RN13 R_Network08_US
RN12 R_Network08_US
SW1 SW_DIP_x08
SW2 SW_DIP_x08
io_cabinet
File: io_cabinet.kicad_sch
E4 Quad Mux 74LS157
SCR_A[18..15]
JPB3_R[2..0]
SCR jumpers
AA3 ULN2003
High-Voltage
High-Current
Darlington Transistor Arrays
10.5-kΩ series base
EMI_Filter_LCL
E7D 7400
74LS32 F7C
F7B 74LS32
F7A 74LS32
CP51 101J
MAINAB12_UK
Used as ADC inputs from gun in Laser Ghost on board: 837-7536 171-5993A
VDP_MIX
patreon.com/jotego
JOTEGO
Sheet: /IO Controller/
File: i_o controller.kicad_sch
Title: SEGA System 18 MODEL 837-7178
Size: A4
Date: 2022-03-18
Rev: José Tejada
KiCad E.D.A. 8.0.4
Id: 20/26

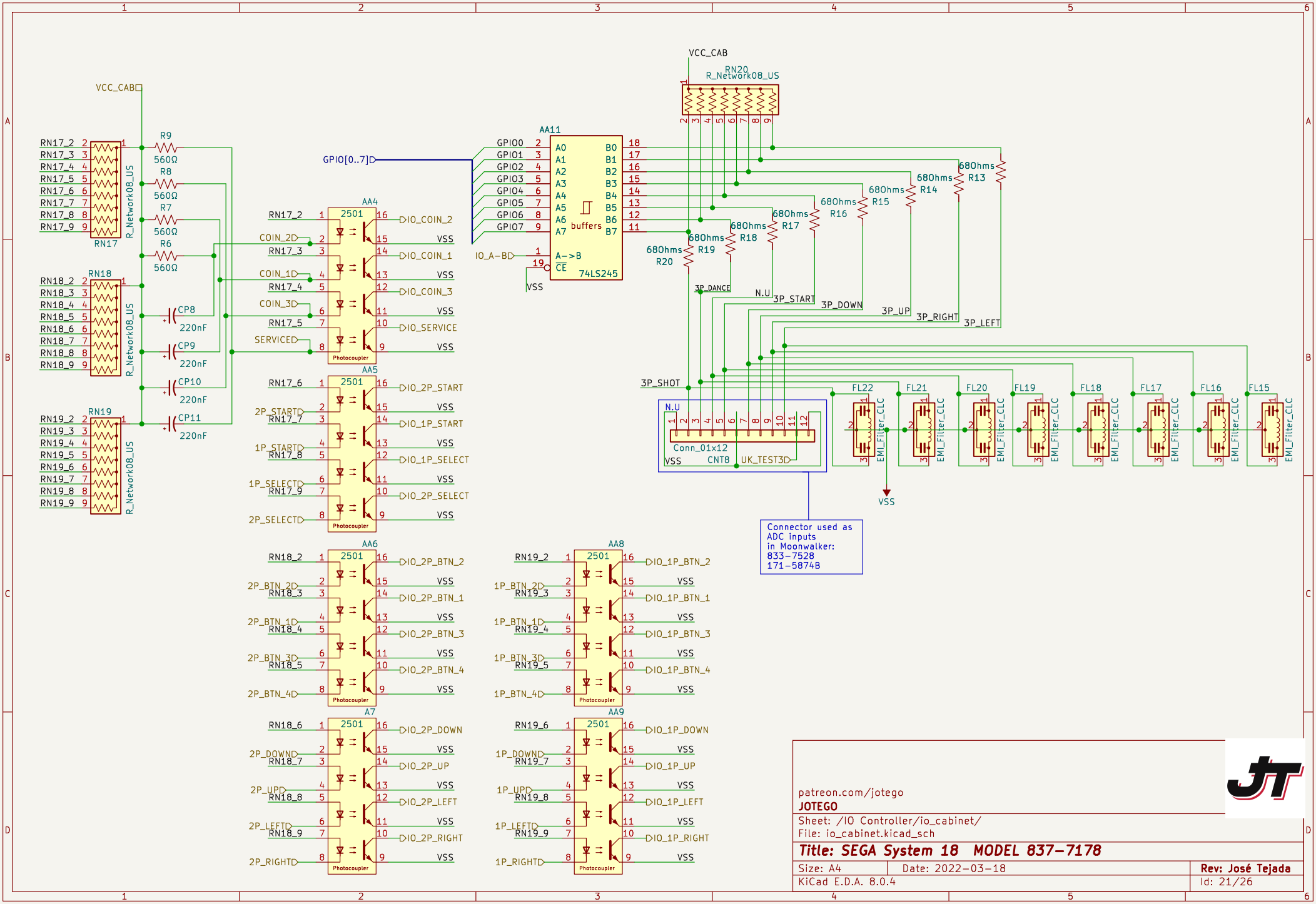

patreon.com/jotego

JOTEGO

Sheet: /IO Controller/io_cabinet/

File: io_cabinet.kicad_sch

Title: SEGA System 18 MODEL 837-7178

Size: A4	Date: 2022-03-18	**Rev: José Tejada**
KiCad E.D.A. 8.0.4		Id: 21/26

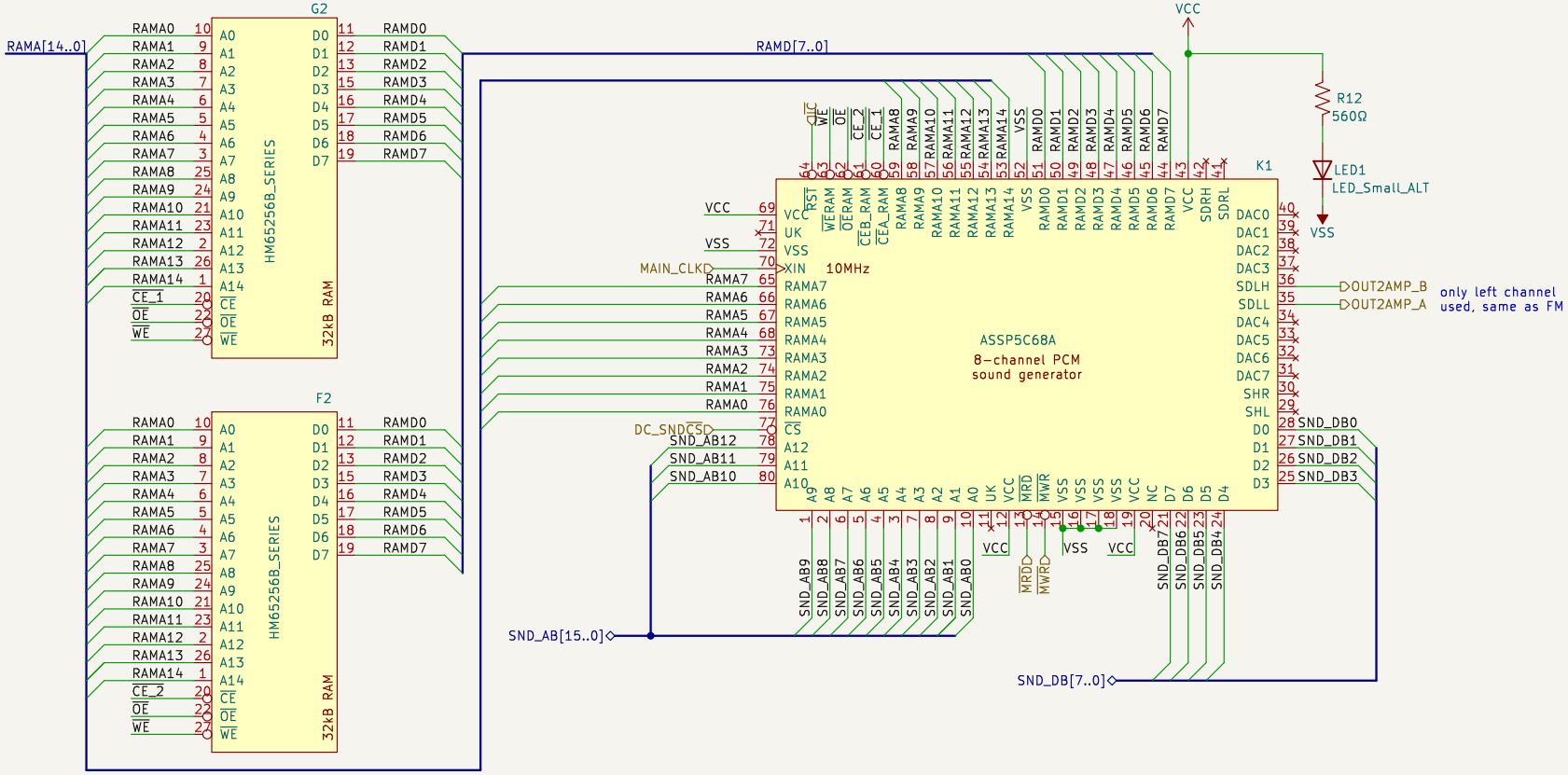

PCM sound generator

patreon.com/jotego

JOTEGO

Sheet: /Sound/PCM/

File: comm_snd.kicad_sch

Title: SEGA System 18 MODEL 837-7178

Size: A4	Date: 2022-03-18	**Rev: José Tejada**
KiCad E.D.A. 8.0.4		Id: 22/26

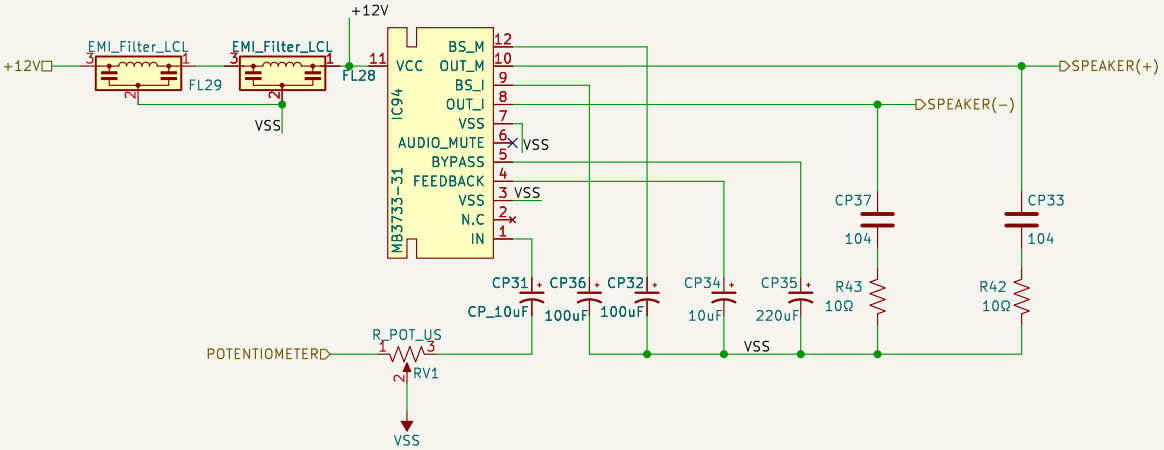

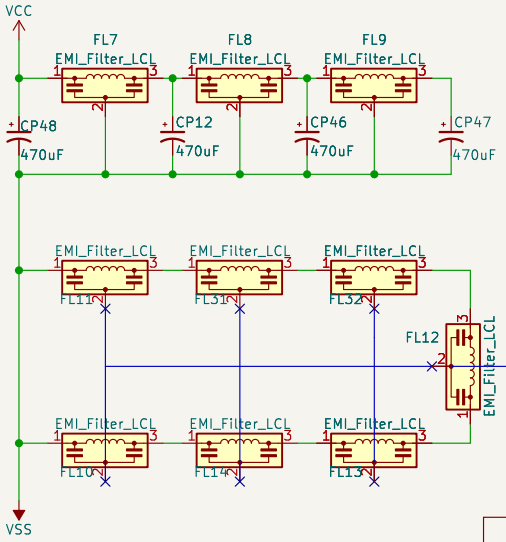

Leaded EMIFI
Three-terminal Capacitor type
DSS6NE52A222p
2200pF 80/-20%
100Vdc 6A -25 to +85°C

A kind of a track is observed between the two PCB layers, as if it were another layer, but there is no certainty about that.
The track seems to be used to delimit or isolate the EMI (ElectroMagnetic Interference) filters.
They may have wanted to isolate the noise between digital and analog devices.

patreon.com/jotego
JOTEGO

Sheet: /Sound/amplifier/audio_amplifier/
File: audio_amplifier.kicad_sch

Title: SEGA System 18 MODEL 837-7178

Size: A4	Date: 2022-03-18	Rev: José Tejada
KiCad E.D.A. 8.0.4		Id: 23/26

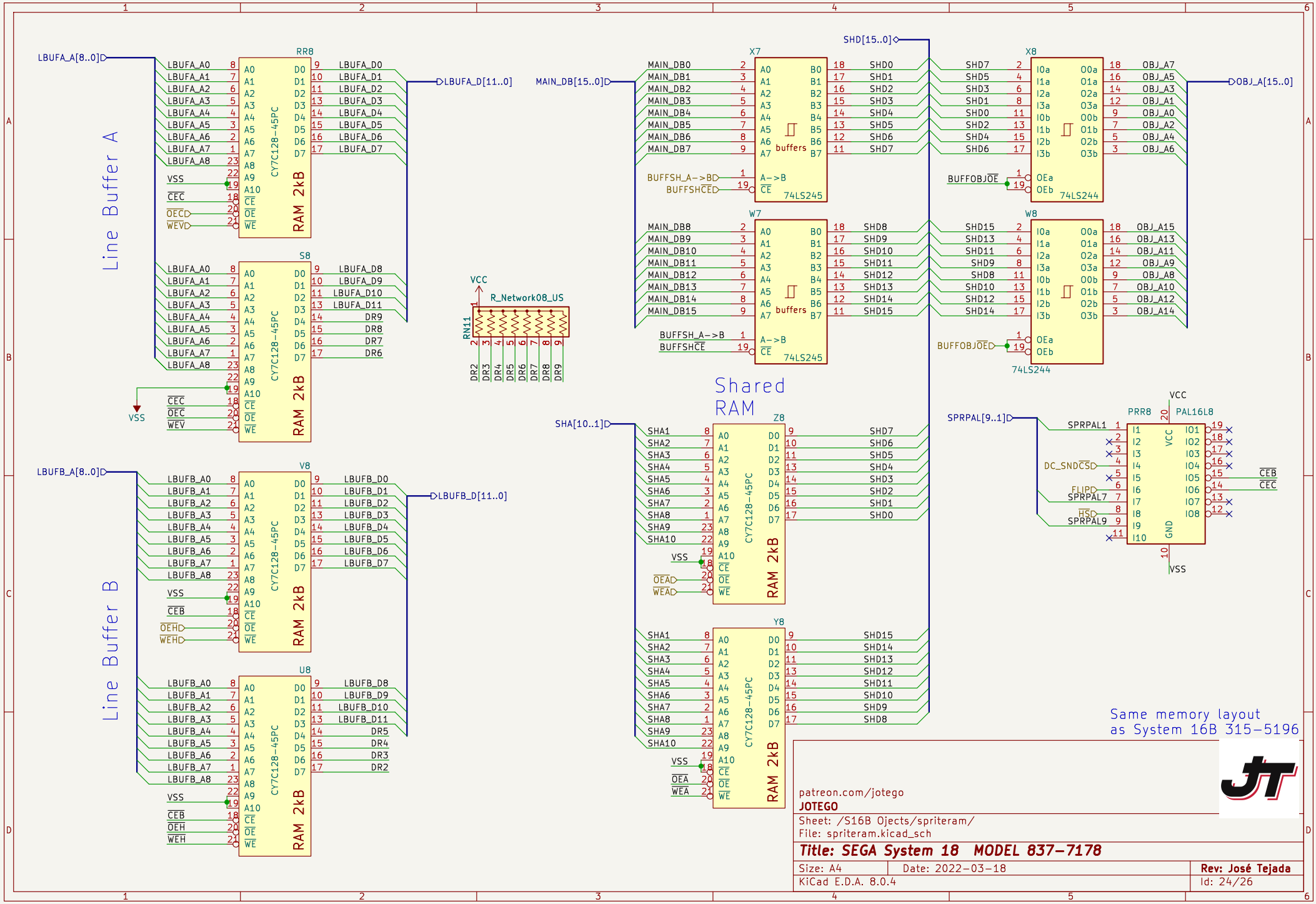
Line Buffer A
Line Buffer B
Shared RAM
RR8
S8
V8
U8
X7
W7
X8
W8
Z8
Y8
PRR8
PAL16L8
RN11
R_Network08_US
CY7C128-45PC
RAM 2kB
74LS245
74LS244
buffers
LBUFA_A[8..0]
LBUFA_D[11..0]
LBUFB_A[8..0]
LBUFB_D[11..0]
MAIN_DB[15..0]
SHD[15..0]
OBJ_A[15..0]
SHA[10..1]
SPRPAL[9..1]
BUFFSH_A->B
BUFFSHCE
BUFFOBJOE
DC_SNDCS
FLIP
HS
VCC
VSS
Same memory layout
as System 16B 315-5196
patreon.com/jotego
JOTEGO
Sheet: /S16B Ojects/spriteram/
File: spriteram.kicad_sch
Title: SEGA System 18 MODEL 837-7178
Size: A4
Date: 2022-03-18
Rev: José Tejada
KiCad E.D.A. 8.0.4
Id: 24/26

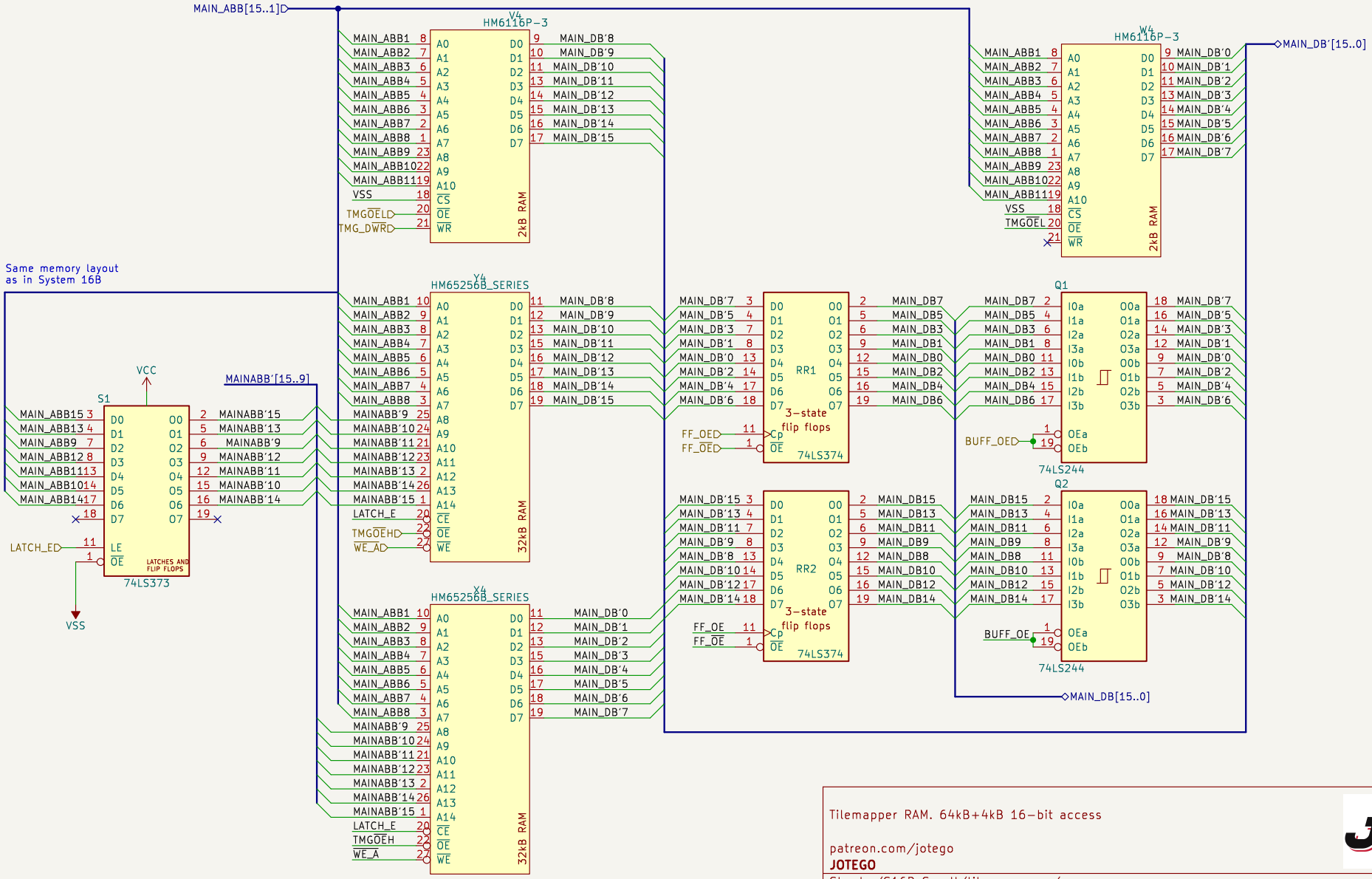

Tilemapper RAM. 64kB+4kB 16-bit access

patreon.com/jotego

JOTEGO

Sheet: /S16B Scroll/tilemapg_ram/

File: tilemapg_ram.kicad_sch

Title: SEGA System 18 MODEL 837-7178

Size: A4	Date: 2022-03-18	**Rev: José Tejada**
KiCad E.D.A. 8.0.4		Id: 25/26

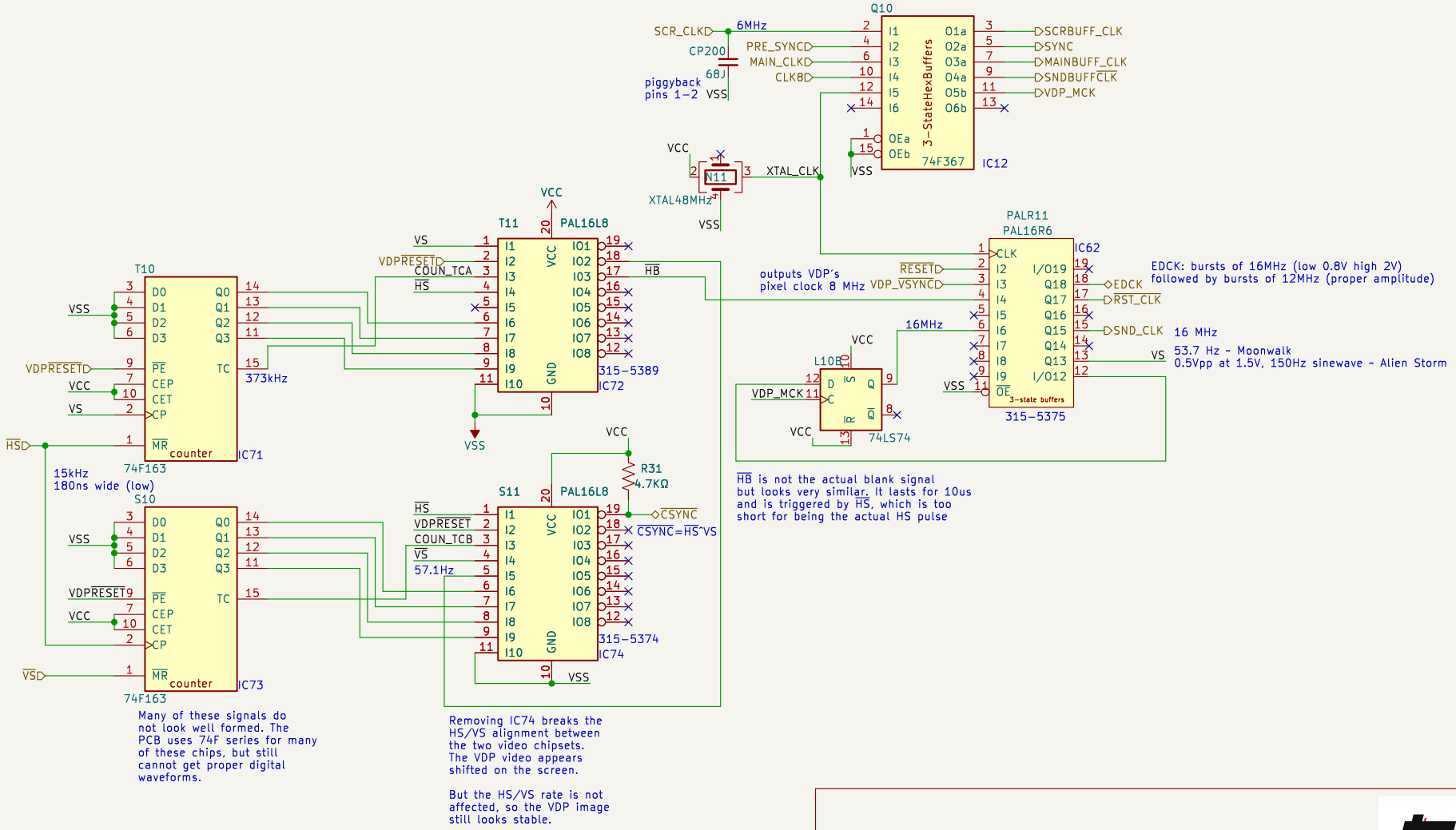

VDP pixel clock and csync generation
patreon.com/jotego
JOTEGO

Sheet: /Video Sync/
File: buffers.kicad_sch

Title: SEGA System 18 MODEL 837-7178

Size: A4	Date: 2022-03-18	**Rev: José Tejada**
KiCad E.D.A. 8.0.4		Id: 26/26