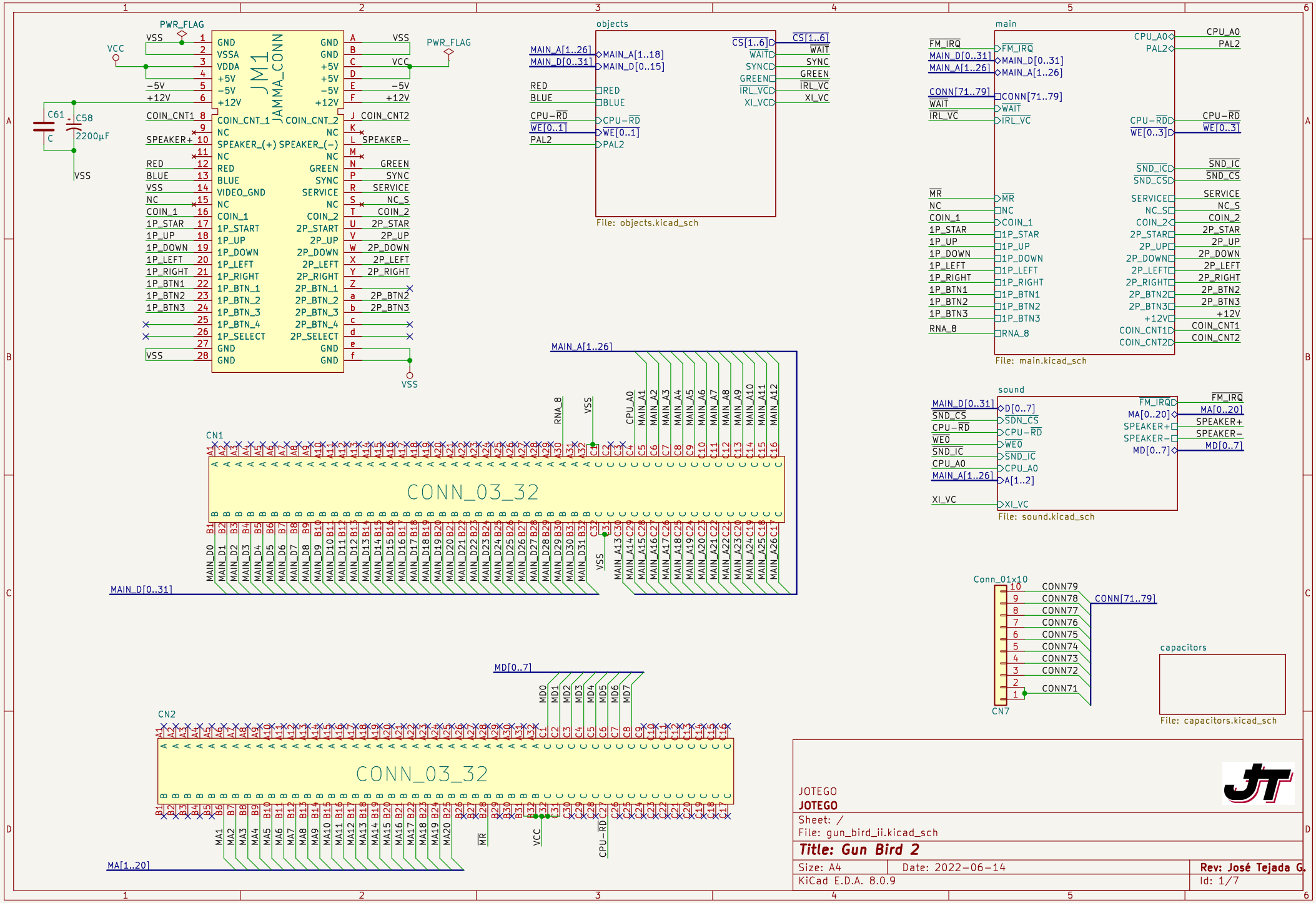
PWR_FLAG
VCC
VSS
C61
C58
C
2200µF
JM1
JAMMA_CONN
GND
VSSA
VDDA
+5V
−5V
+12V
COIN_CNT1
COIN_CNT2
NC
SPEAKER_(+)
SPEAKER_(−)
SPEAKER+
SPEAKER−
RED
BLUE
VIDEO_GND
GREEN
SYNC
SERVICE
NC_S
COIN_1
COIN_2
1P_START
2P_START
1P_UP
2P_UP
1P_DOWN
2P_DOWN
1P_LEFT
2P_LEFT
1P_RIGHT
2P_RIGHT
1P_BTN1
2P_BTN1
1P_BTN2
2P_BTN2
1P_BTN3
2P_BTN3
1P_BTN4
2P_BTN4
1P_SELECT
2P_SELECT
objects
MAIN_A[1..26]
MAIN_D[0..31]
MAIN_A[1..18]
MAIN_D[0..15]
CPU−RD
WE[0..1]
PAL2
CS[1..6]
WAIT
IRL_VC
XI_VC
File: objects.kicad_sch
main
FM_IRQ
CONN[71..79]
CPU_A0
SND_IC
SND_CS
MR
RNA_8
File: main.kicad_sch
sound
D[0..7]
SDN_CS
WE0
A[1..2]
MA[0..20]
MD[0..7]
File: sound.kicad_sch
CN1
CONN_03_32
CN2
Conn_01x10
CN7
CONN71
CONN72
CONN73
CONN74
CONN75
CONN76
CONN77
CONN78
CONN79
capacitors
File: capacitors.kicad_sch
JOTEGO
JOTEGO
Sheet: /
File: gun_bird_ii.kicad_sch
Title: Gun Bird 2
Size: A4
Date: 2022−06−14
Rev: José Tejada G.
KiCad E.D.A. 8.0.9
Id: 1/7

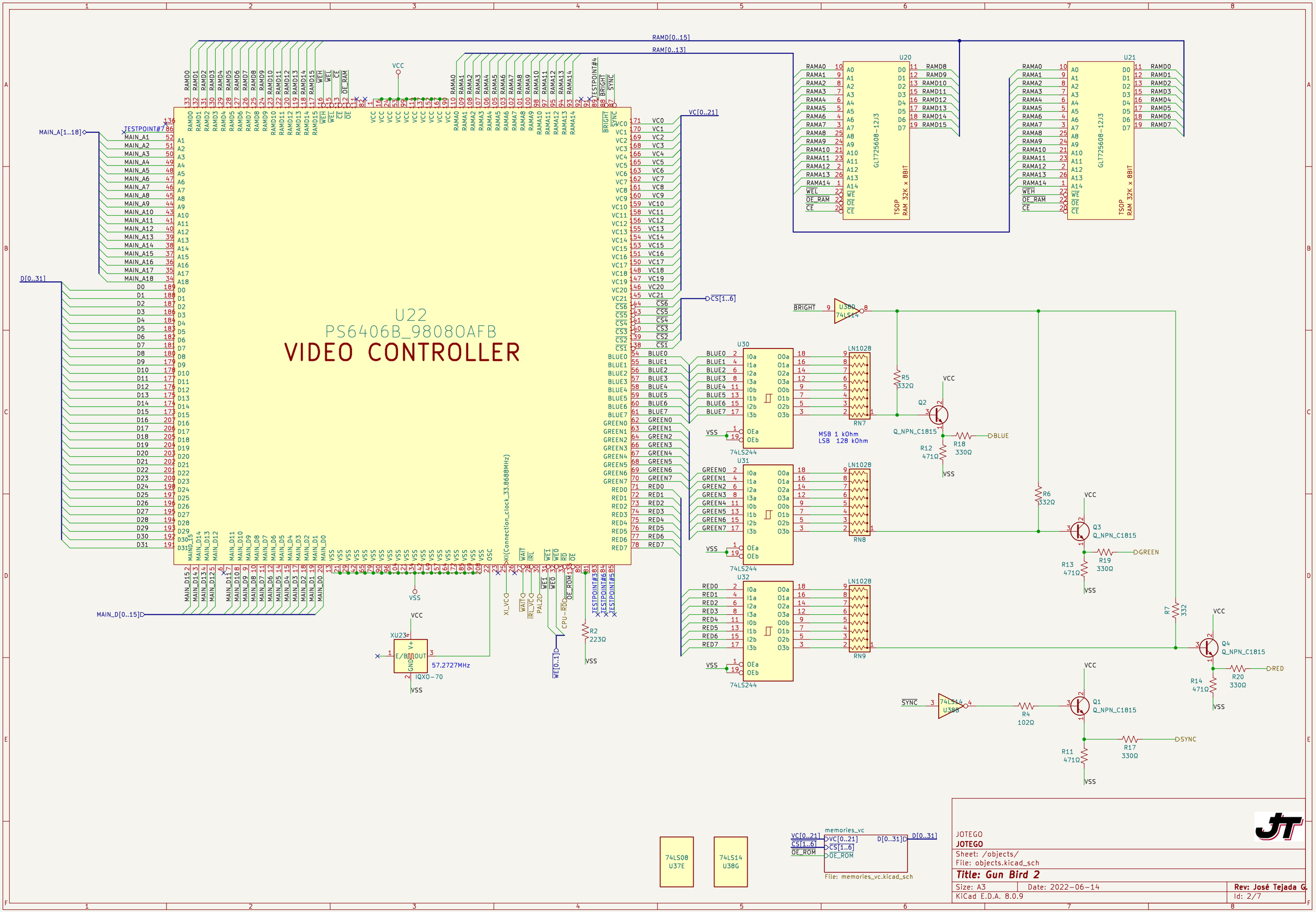
U22
PS6406B_98080AFB
VIDEO CONTROLLER
U20
U21
GLT725608-12J3
TSOP
RAM 32K x 8BIT
RAMD[0..15]
RAM[0..13]
MAIN_A[1..18]
D[0..31]
MAIN_D[0..15]
VC[0..21]
CS[1..6]
XI(Connection_clock_33.8688MHz)
XU23
E/B
IOUT
GND
V+
IQXO-70
57.2727MHz
U30
U31
U32
74LS244
LN1028
RN7
RN8
RN9
MSB 1 kOhm
LSB 128 kOhm
R5
332Ω
R6
332Ω
R7
332
R2
223Ω
R12
471Ω
R13
471Ω
R14
471Ω
R11
471Ω
R18
330Ω
R19
330Ω
R20
330Ω
R17
330Ω
R4
102Ω
Q1
Q2
Q3
Q4
Q_NPN_C1815
BLUE
GREEN
RED
SYNC
BRIGHT
U38D
74LS14
U38B
74LS08
U37E
memories_vc
File: memories_vc.kicad_sch
JOTEGO
Sheet: /objects/
File: objects.kicad_sch
Title: Gun Bird 2
Size: A3
Date: 2022-06-14
Rev: José Tejada G.
KiCad E.D.A. 8.0.9
Id: 2/7

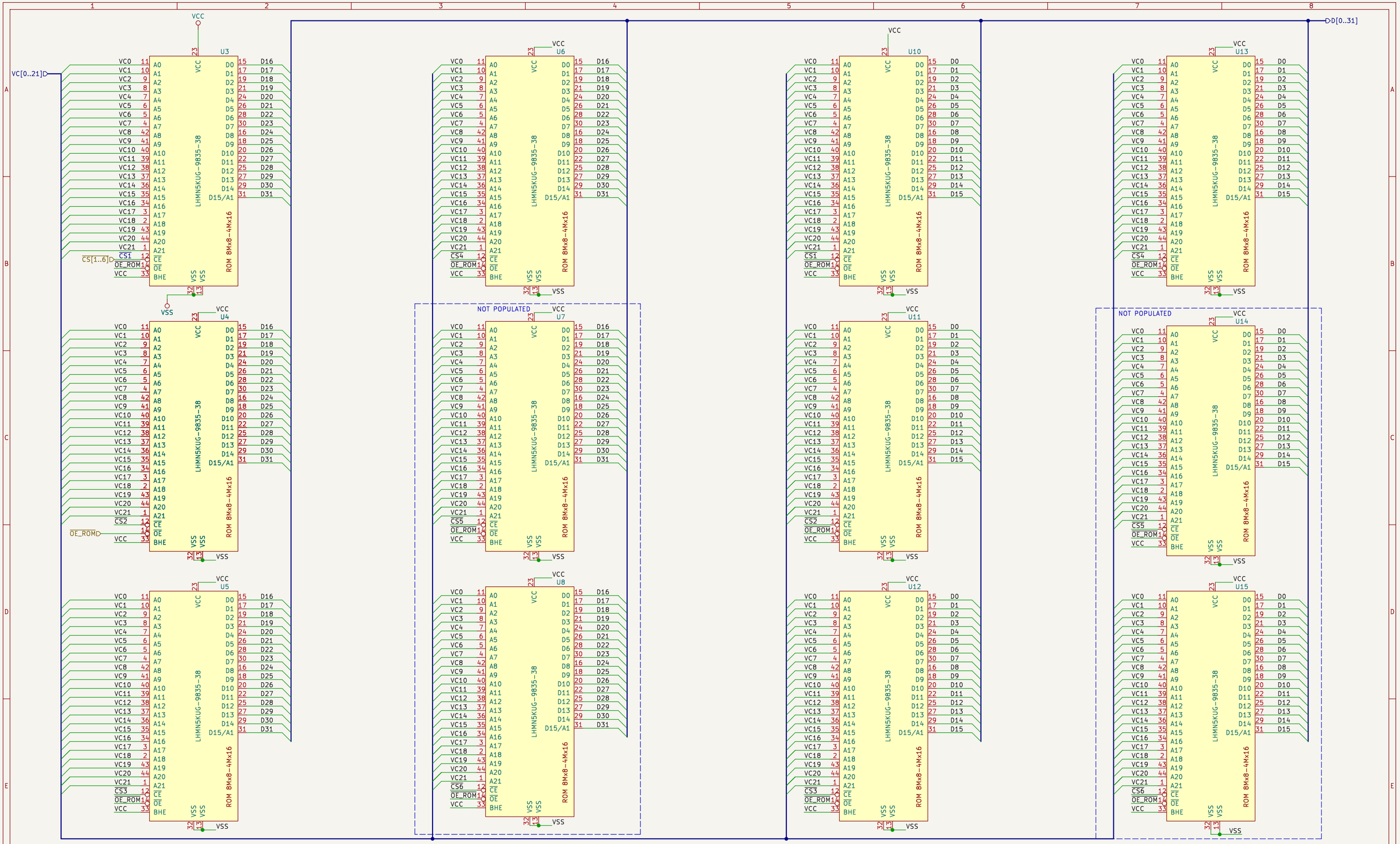

JOTEGO
JOTEGO

Sheet: /objects/memories_vc/
File: memories_vc.kicad_sch

Title: Gun Bird 2

Size: A3	Date: 2022-06-14	**Rev: José Tejada G.**
KiCad E.D.A. 8.0.9		Id: 3/7

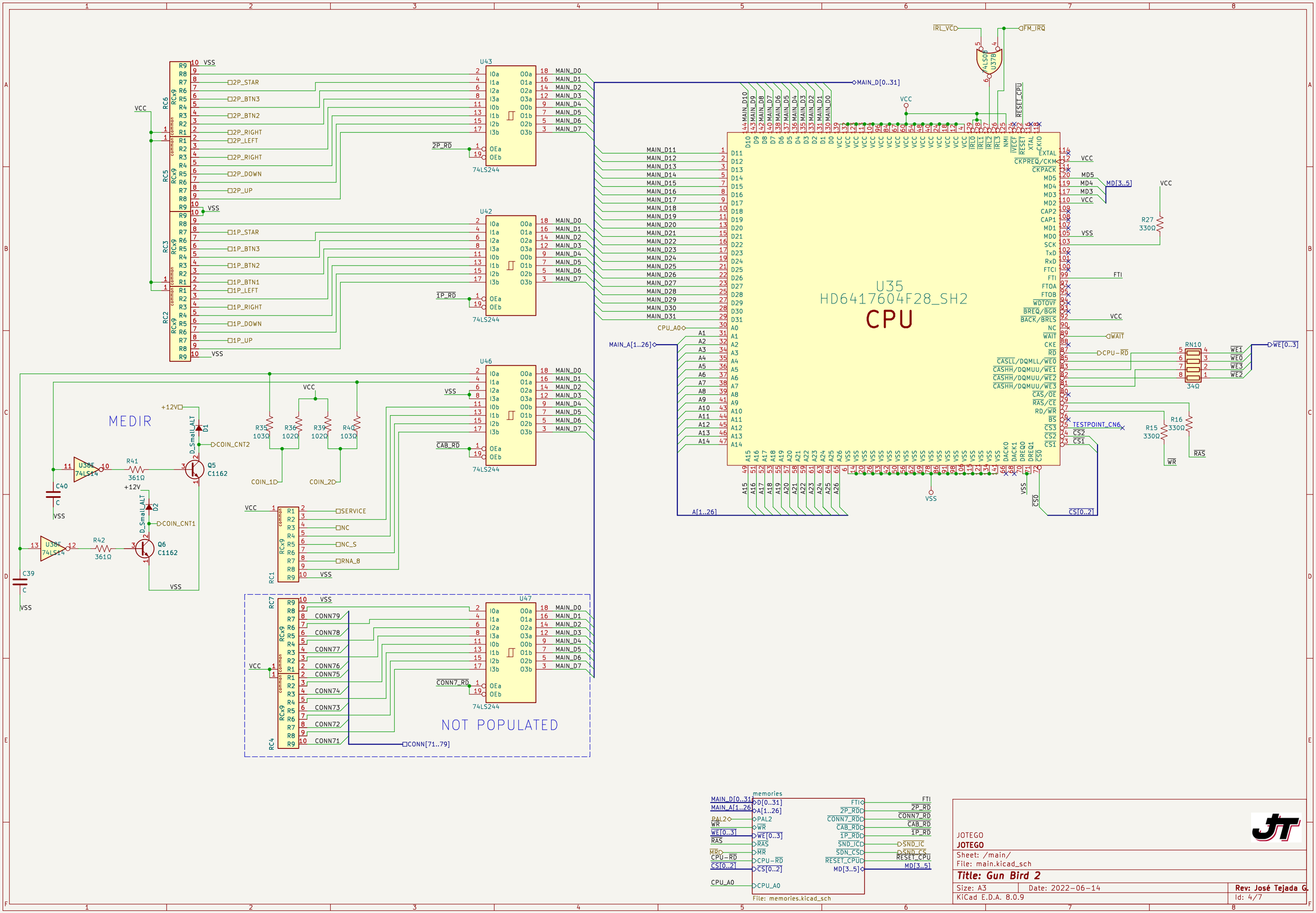

JOTEGO
JOTEGO
Sheet: /main/
File: main.kicad_sch

Title: Gun Bird 2

Size: A3	Date: 2022-06-14	**Rev: José Tejada G.**
KiCad E.D.A. 8.0.9		Id: 4/7

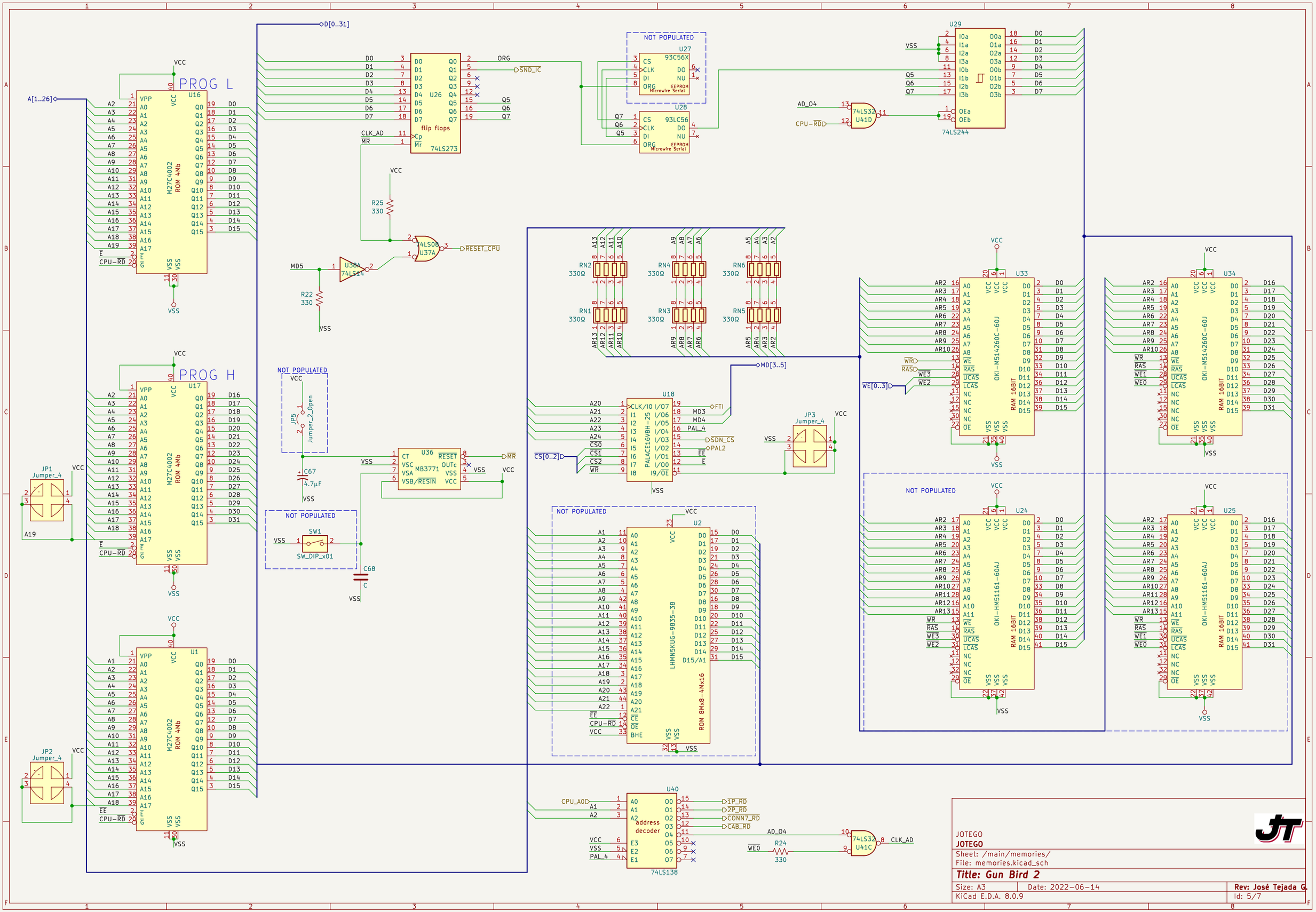

JOTEGO
JOTEGO

Sheet: /main/memories/
File: memories.kicad_sch

Title: Gun Bird 2

Size: A3	Date: 2022-06-14	Rev: José Tejada G.
KiCad E.D.A. 8.0.9		Id: 5/7

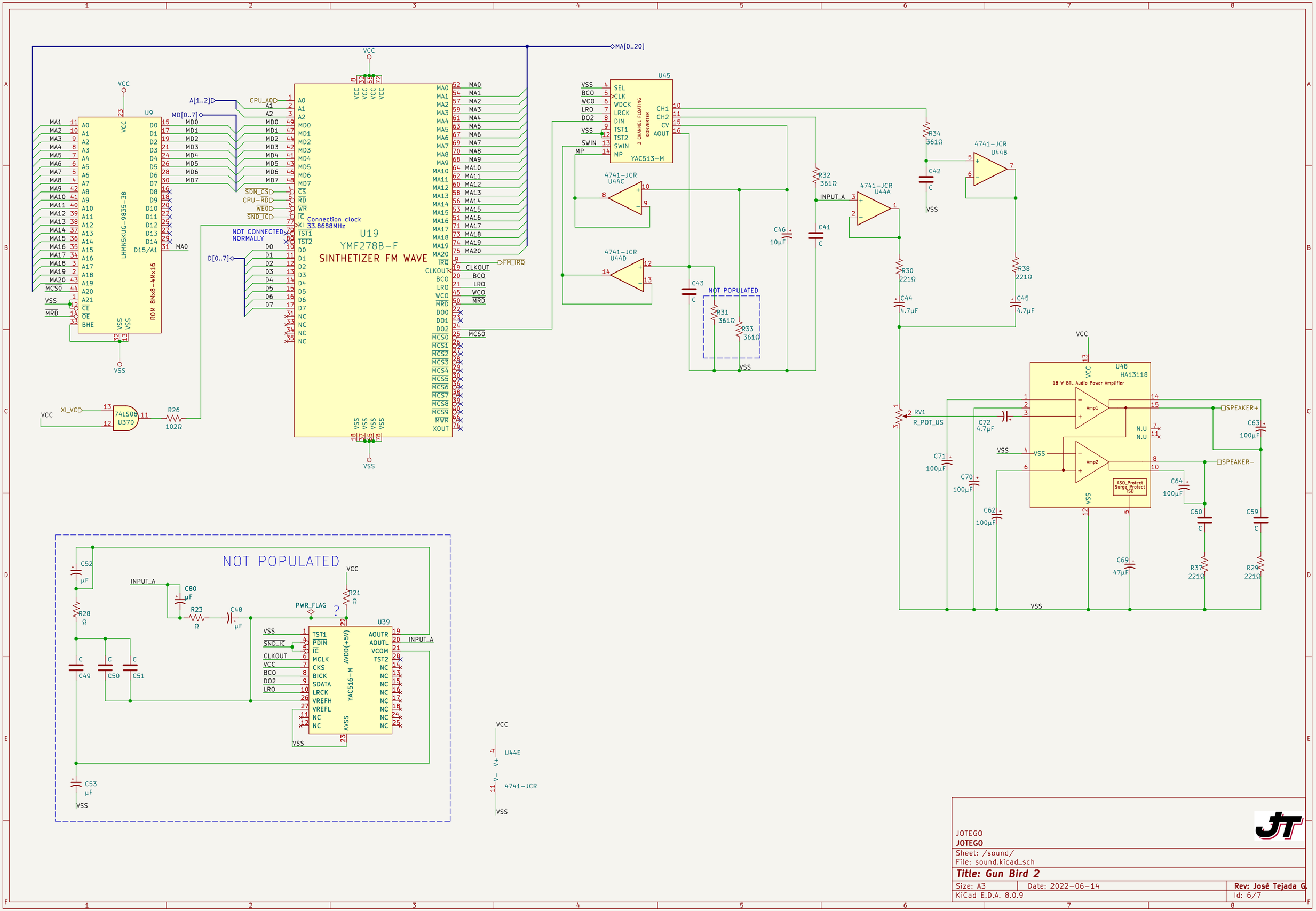

JOTEGO
JOTEGO
Sheet: /sound/
File: sound.kicad_sch

Title: Gun Bird 2

Size: A3	Date: 2022-06-14	**Rev: José Tejada G.**
KiCad E.D.A. 8.0.9		Id: 6/7

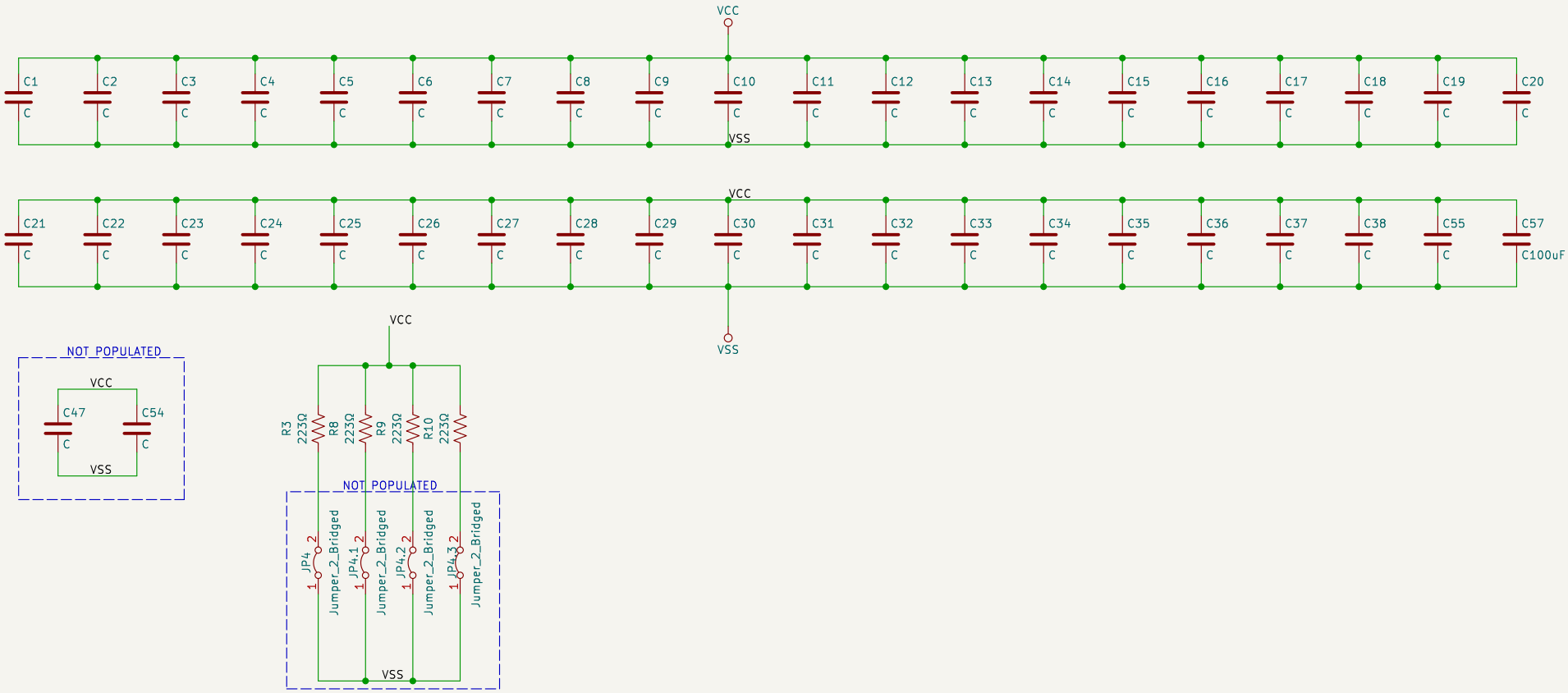

JOTEGO

JOTEGO

Sheet: /capacitors/

File: capacitors.kicad_sch

Title: Gun Bird 2

Size: A4	Date: 2022-06-14	**Rev: José Tejada G.**
KiCad E.D.A. 8.0.9		Id: 7/7