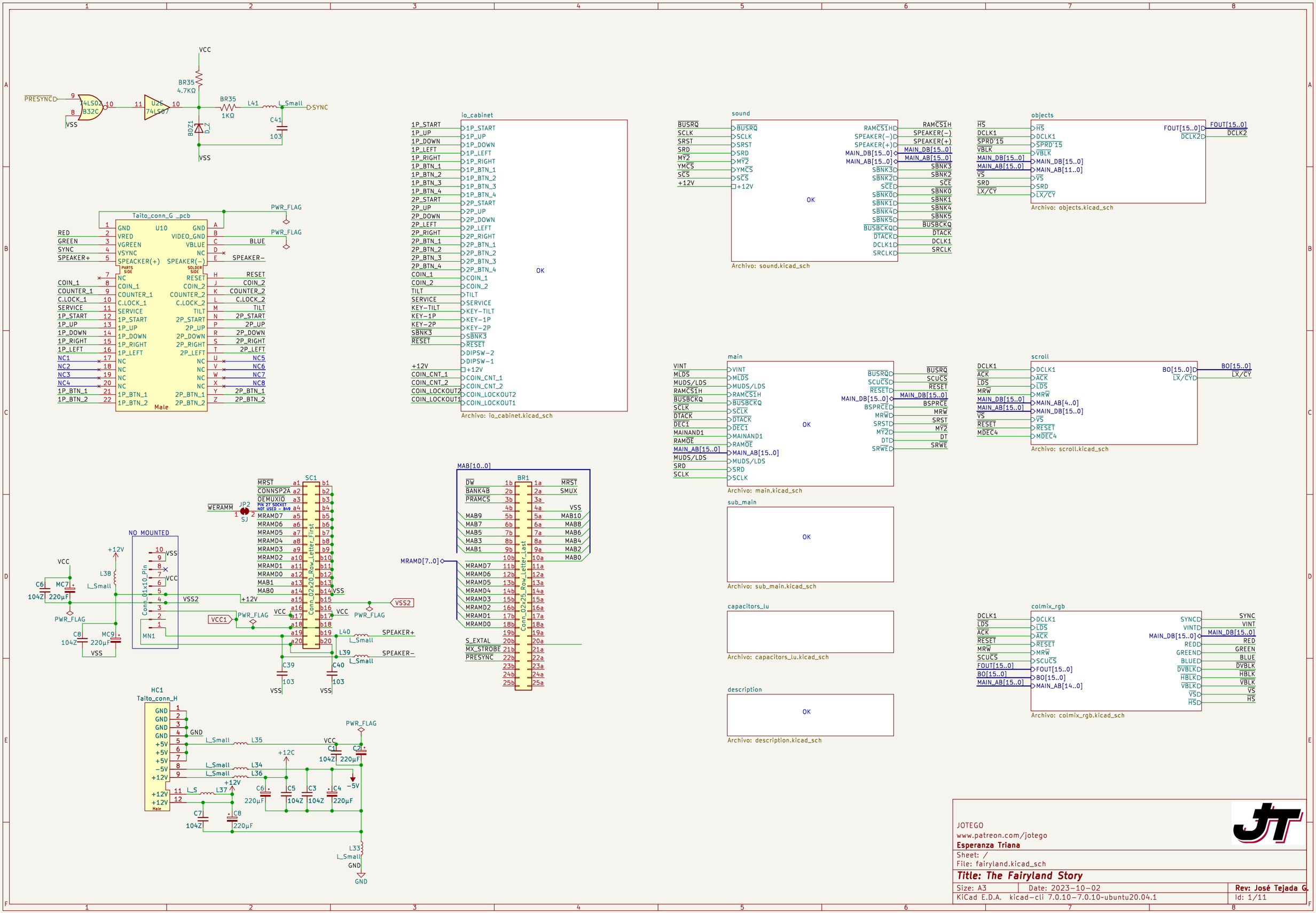
PRESYNC
74LS02 B32C
VSS
VCC
BR35 4.7KΩ
U26 74LS07
BR35 1KΩ
L41
L_Small
SYNC
C41 103
BDZ1 D_Z
Taito_conn_G _pcb
U10
PWR_FLAG
RED
GREEN
SYNC
SPEAKER+
COIN_1
COUNTER_1
C.LOCK_1
SERVICE
1P_START
1P_UP
1P_DOWN
1P_RIGHT
1P_LEFT
NC1
NC2
NC3
NC4
1P_BTN_1
1P_BTN_2
GND
VRED
VGREEN
VSYNC
SPEACKER(+)
VIDEO_GND
VBLUE
SPEAKER(−)
RESET
COIN_2
COUNTER_2
C.LOCK_2
TILT
2P_START
2P_UP
2P_DOWN
2P_RIGHT
2P_LEFT
NC5
NC6
NC7
NC8
2P_BTN_1
2P_BTN_2
Male
io_cabinet
OK
Archivo: io_cabinet.kicad_sch
sound
BUSRQ
SCLK
SRST
SRD
MY2
YMCS
SCS
+12V
RAMCS1H
SPEAKER(−)
SPEAKER(+)
MAIN_DB[15..0]
MAIN_AB[15..0]
SBNK3
SBNK2
SCE
SBNK0
SBNK1
SBNK4
SBNK5
BUSBCKQ
DTACK
DCLK1
SRCLK
Archivo: sound.kicad_sch
objects
HS
VBLK
VS
FOUT[15..0]
DCLK2
MAIN_AB[11..0]
LX/CY
Archivo: objects.kicad_sch
main
VINT
MLDS
MUDS/LDS
RAMCS1H
BUSBCKQ
SCLK
DTACK
DEC1
MAINAND1
RAMOE
MAIN_AB[15..0]
SRD
SCUCS
RESET
BSPRCE
MRW
DT
SRWE
Archivo: main.kicad_sch
scroll
ACK
LDS
MDEC4
BO[15..0]
LX/CY
Archivo: scroll.kicad_sch
sub_main
Archivo: sub_main.kicad_sch
capacitors_lu
Archivo: capacitors_lu.kicad_sch
description
Archivo: description.kicad_sch
colmix_rgb
SYNC
VINT
RED
GREEN
BLUE
DVBLK
HBLK
Archivo: colmix_rgb.kicad_sch
NO MOUNTED
Conn_01x10_Pin
MN1
L38
C6 104Z
MC7 220µF
C8 104Z
MC9 220µF
VSS2
VCC1
WERAMM
JP2
SJ
PIN 27 SOCKET NOT USED - B49
SC1
Conn_02x20_Row_Letter_First
MRST
CONNSP2A
OEMUXIO
MRAMD7
MRAMD6
MRAMD5
MRAMD4
MRAMD3
MRAMD2
MRAMD1
MRAMD0
MAB1
MAB0
L40
L39
C39 103
C40 103
MAB[10..0]
BR1
Conn_02x25_Row_Letter_Last
DW
BANK4B
PRAMCS
MAB9
MAB7
MAB5
MAB3
MAB1
MRAMD[7..0]
S_EXTAL
MX_STROBE
PRESYNC
SMUX
MAB10
MAB8
MAB6
MAB4
MAB2
HC1
Taito_conn_H
+5V
−5V
L35
L34
L36
L37
C1 104Z
C2 220µF
C3 104Z
C4 220µF
C5 104Z
C6 220µF
C7 104Z
C8 220µF
L33
JOTEGO
www.patreon.com/jotego
Esperanza Triana
Sheet: /
File: fairyland.kicad_sch
Title: The Fairyland Story
Size: A3
Date: 2023-10-02
Rev: José Tejada G.
KiCad E.D.A. kicad-cli 7.0.10-7.0.10~ubuntu20.04.1
Id: 1/11

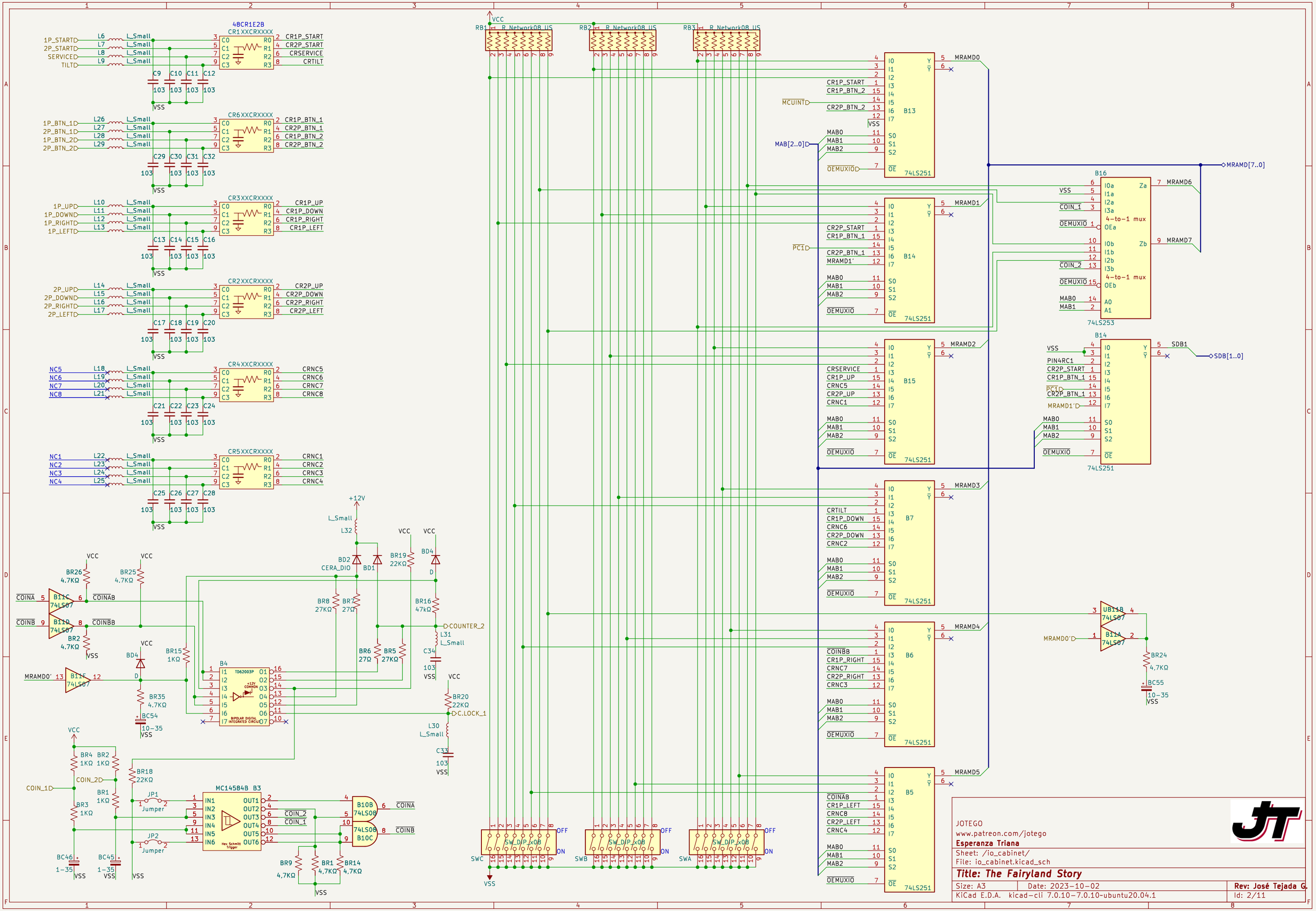

JOTEGO
www.patreon.com/jotego
Esperanza Triana
Sheet: /io_cabinet/
File: io_cabinet.kicad_sch

Title: The Fairyland Story

Size: A3	Date: 2023-10-02	**Rev: José Tejada G.**
KiCad E.D.A. kicad-cli 7.0.10-7.0.10-ubuntu20.04.1		Id: 2/11

JOTEGO
www.patreon.com/jotego
Esperanza Triana

Sheet: /scroll/
File: scroll.kicad_sch

Title: The Fairyland Story

Size: A3	Date: 2023-10-02	**Rev: José Tejada G.**
KiCad E.D.A. kicad-cli 7.0.10-7.0.10~ubuntu20.04.1		Id: 3/11

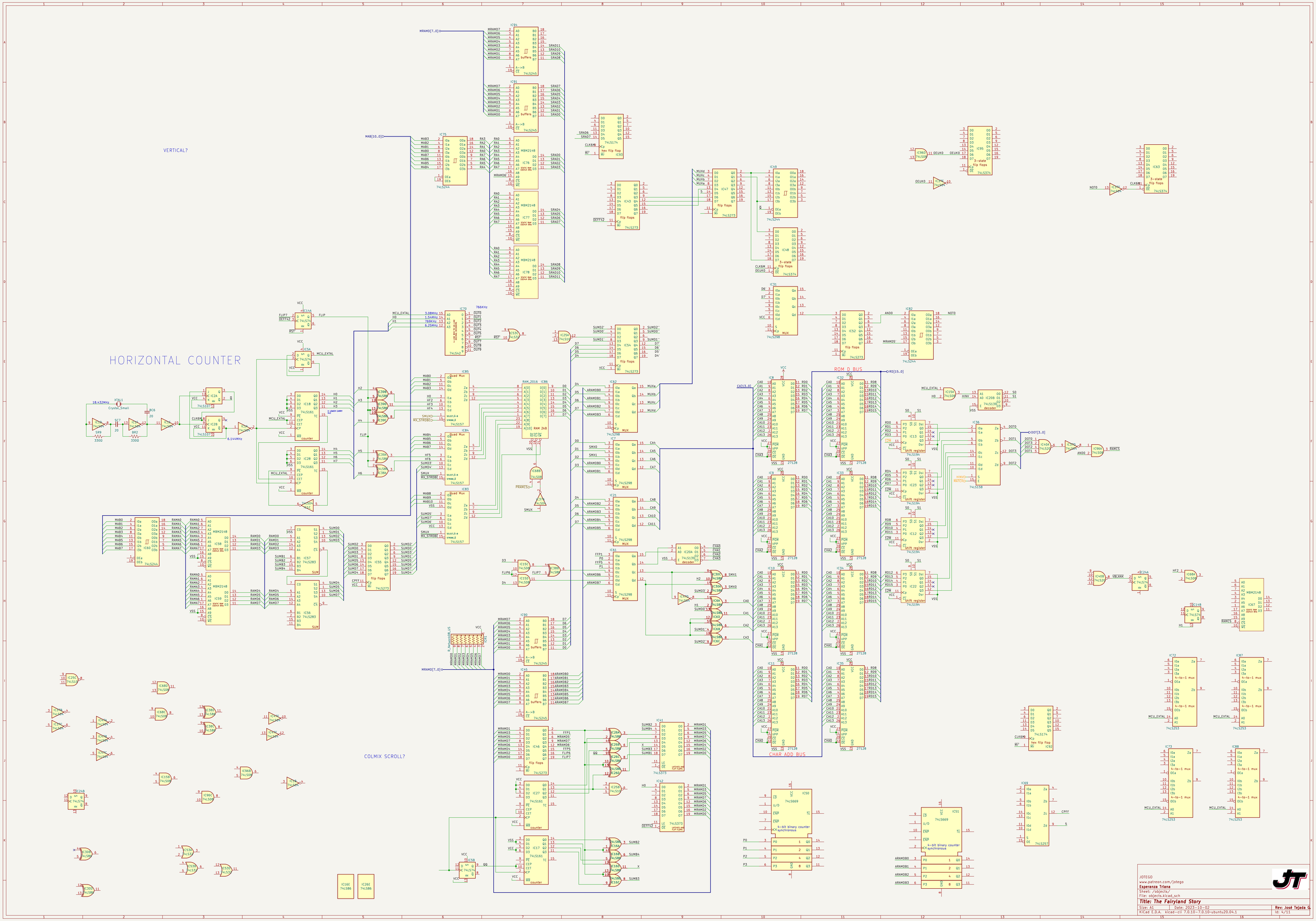
VERTICAL?
HORIZONTAL COUNTER
COLMIX SCROLL?
ROM_D_BUS
CHAR ADD_BUS
MRAMD[7..0]
MAB[10..0]
MCU_EXTAL
RAMCS
DOT[3..0]
RD[15..0]
CA[13..0]
VBLANK
JOTEGO
www.patreon.com/jotego
Esperanza Triana
Sheet: /objects/
File: objects.kicad_sch
Title: The Fairyland Story
Size: A1
Date: 2023-10-02
Rev: José Tejada G.
KiCad E.D.A. kicad-cli 7.0.10-7.0.10-ubuntu20.04-1
Id: 4/11

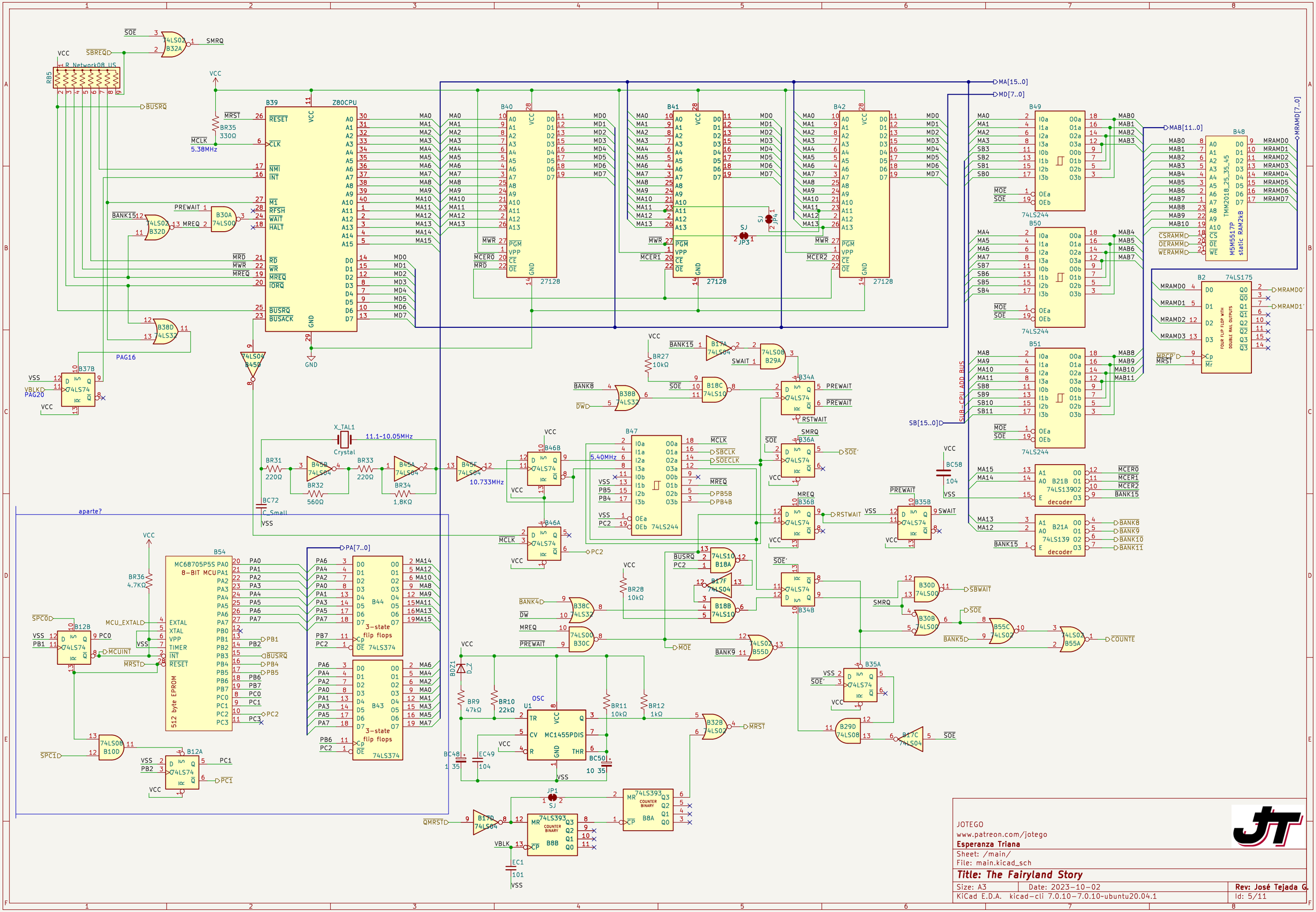
B39
Z80CPU
B40
B41
B42
27128
B49
B50
B51
74LS244
B48
TMM2018_25_35_45
M5M5517P
static RAM2kB
B2
74LS175
FOUR FLIP FLOP WITH DOUBLE RAIL OUTPUTS
B47
74LS244
B54
MC68705P5S
8-BIT MCU
512 byte EPROM
B44
B43
3-state flip flops
74LS374
X_TAL1
Crystal
11.1-10.05MHz
10.733MHz
5.40MHz
5.38MHz
aparte?
OSC
U1
MC1455PDIS
B8A
B8B
74LS393
COUNTER BINARY
MA[15..0]
MD[7..0]
MAB[11..0]
MRAMD[7..0]
SUB-CPU ADD BUS
SB[15..0]
PA[7..0]
PAG16
PAG20
JOTEGO
www.patreon.com/jotego
Esperanza Triana
Sheet: /main/
File: main.kicad_sch
Title: The Fairyland Story
Size: A3
Date: 2023-10-02
Rev: José Tejada G.
KiCad E.D.A. kicad-cli 7.0.10-7.0.10~ubuntu20.04.1
Id: 5/11

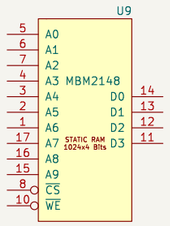

JOTEGO
www.patreon.com/jotego
Esperanza Triana

Sheet: /colmix_rgb/
File: colmix_rgb.kicad_sch

Title: The Fairyland Story

Size: A3	Date: 2023-10-02	**Rev: José Tejada G.**
KiCad E.D.A. kicad-cli 7.0.10-7.0.10~ubuntu20.04.1		Id: 6/11

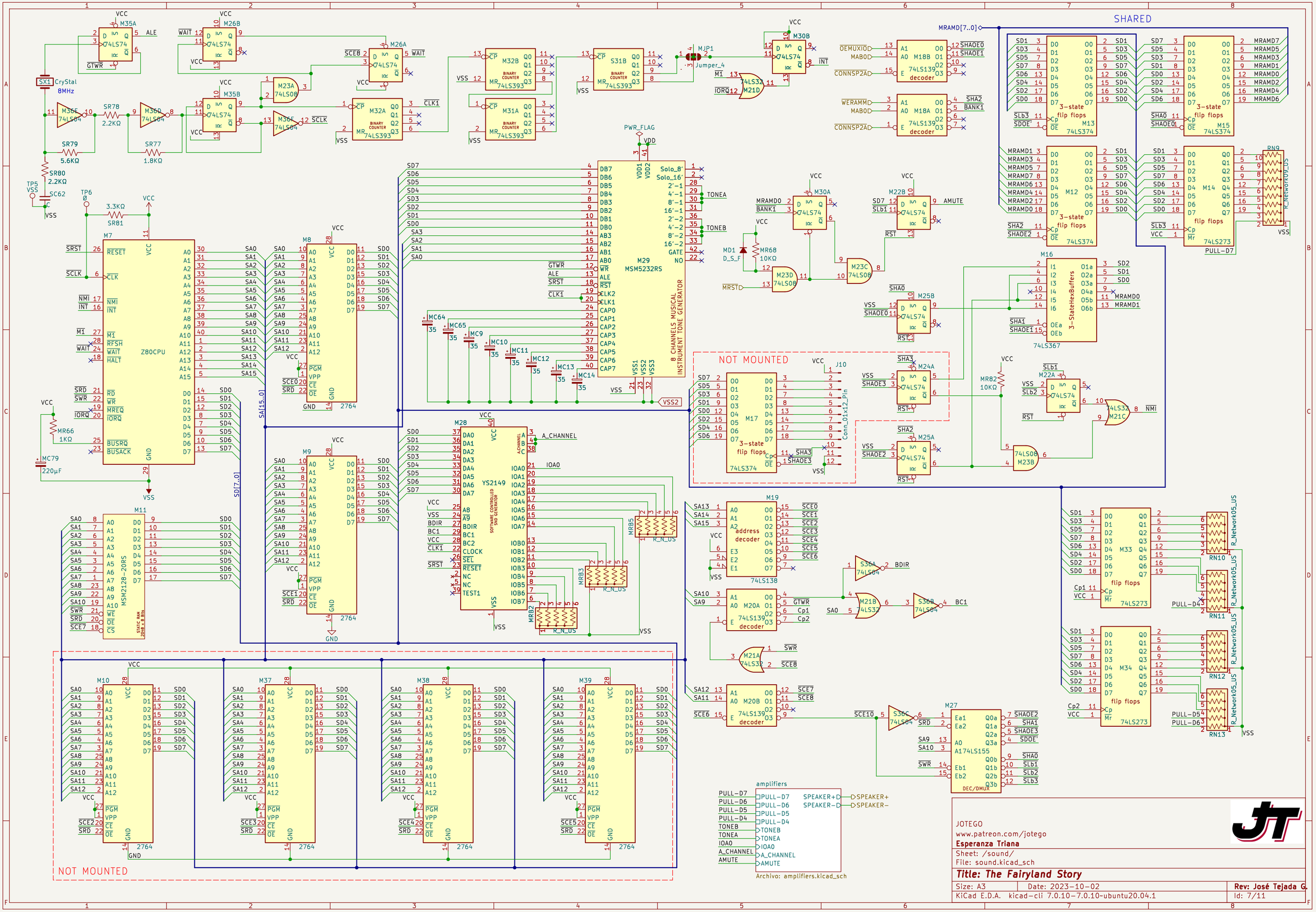
SHARED
NOT MOUNTED
M7 Z80CPU
M29 MSM5232RS
8 CHANNELS MUSICAL INSTRUMENT TONE GENERATOR
M28 YS2149
M11 MSM2128-20RS
M8 2764
M9 2764
M10 2764
M37 2764
M38 2764
M39 2764
M17 3-state flip flops 74LS374
M12 3-state flip flops 74LS374
M13 3-state flip flops 74LS374
M14 flip flops 74LS273
M15 flip flops 74LS273
M16 3-StateHexBuffers 74LS367
M19 address decoder 74LS138
M33 flip flops 74LS273
M34 flip flops 74LS273
M27 A174LS155 DEC/DMUX
amplifiers
Archivo: amplifiers.kicad_sch
JOTEGO
www.patreon.com/jotego
Esperanza Triana
Sheet: /sound/
File: sound.kicad_sch
Title: The Fairyland Story
Size: A3
Date: 2023-10-02
Rev: José Tejada G.
KiCad E.D.A. kicad-cli 7.0.10-7.0.10-ubuntu20.04.1
Id: 7/11

JOTEGO
www.patreon.com/jotego
Esperanza Triana

Sheet: /capacitors_lu/
File: capacitors_lu.kicad_sch

Title: The Fairyland Story

Size: A3	Date: 2023-10-02	**Rev: José Tejada G.**
KiCad E.D.A. kicad-cli 7.0.10-7.0.10~ubuntu20.04.1		Id: 8/11

The Fairyland Story

The Fairyland Story[a] is a platform arcade video game developed and published by Taito in 1985. In the game, the player controls the witch Ptolemy, with the objective being to clear the screen of all enemies. Ptolemy can use her wand to turn the enemies into large cakes, which she can then push off of platforms onto other enemies, which will squash them and award bonus points. Various Items that increase Ptolemy's projectile radius, as well as kill multiple enemies at the SBme time, will also appear throughout the stages.

Gameplay has been compared to later Taito platform games, such as Bubble Bobble and The NewZealand Story. A Japanese MSX version developed and published by Hot-B was released in 1987, while an X68000 port was developed and published in 1991 by SPS. The Fairyland Story would be included in the arcade game collections Taito Legends 2, Taito Memories Jokan, Taito Memories Pocket, and Taito Legends Power-Up. A 2003 port for Japanese mobile phones was made available through the I-mode and EZweb network services. Around 2020, the game was later re-released on Nintendo Switch and PlayStation 4 via Arcade Archives.

Main CPU : Z80 @ 5.3665MHz
Sound CPU : Z80 @ 4MHz
Sound chip : AY-3-8910 @ 2MHz + MSM5232 @ 2MHz + DAC
Additional CPU : M68705 @ 2MHz (used for protection)

Source: https://en.wikipedia.org/wiki/The_Fairyland_Story
http://www.system16.com/hardware.php?id=640&page=1#1558

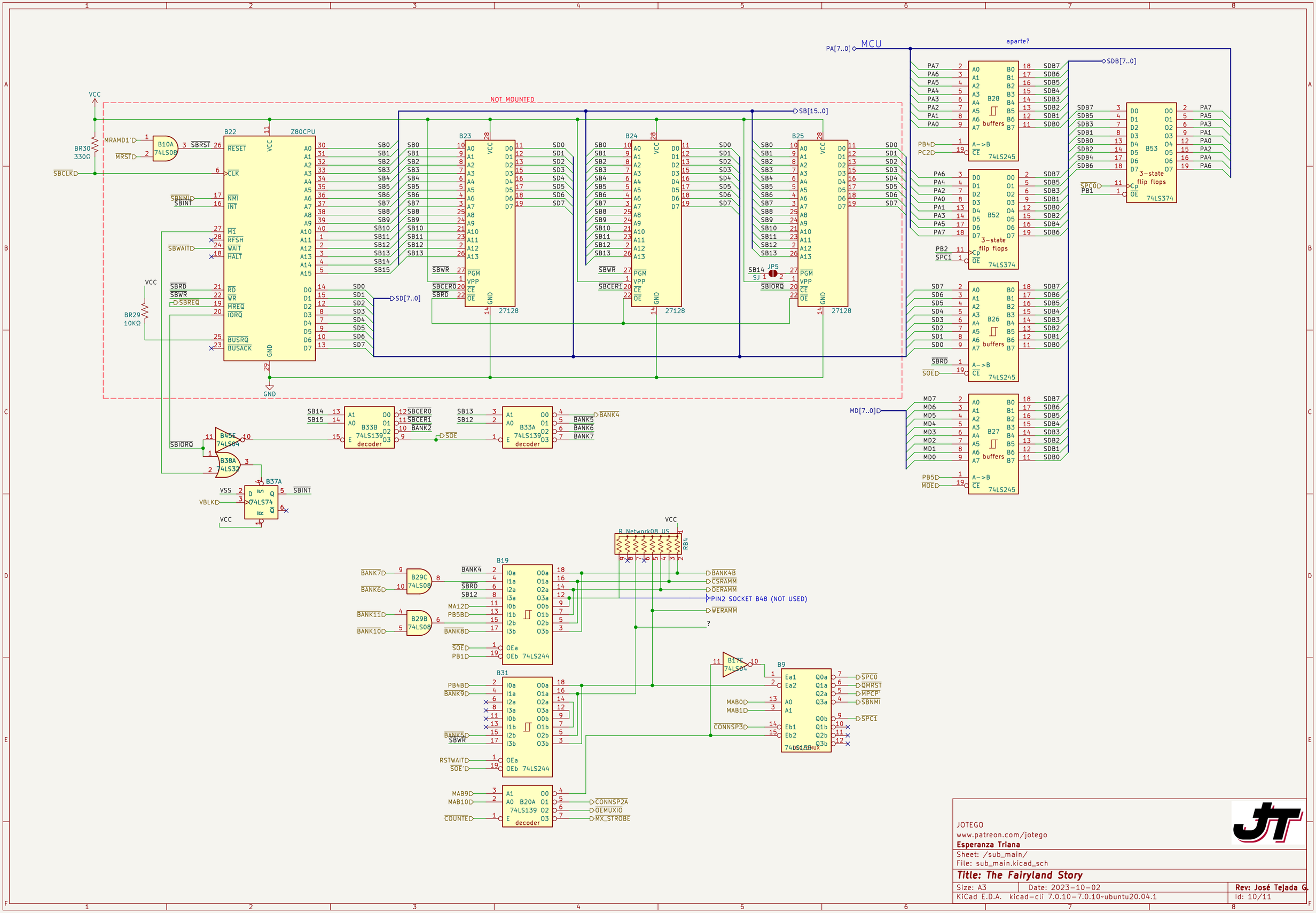

JOTEGO
www.patreon.com/jotego
Esperanza Triana

Sheet: /sub_main/
File: sub_main.kicad_sch

Title: The Fairyland Story

Size: A3	Date: 2023-10-02	**Rev: José Tejada G.**
KiCad E.D.A. kicad-cli 7.0.10-7.0.10~ubuntu20.04.1		Id: 10/11

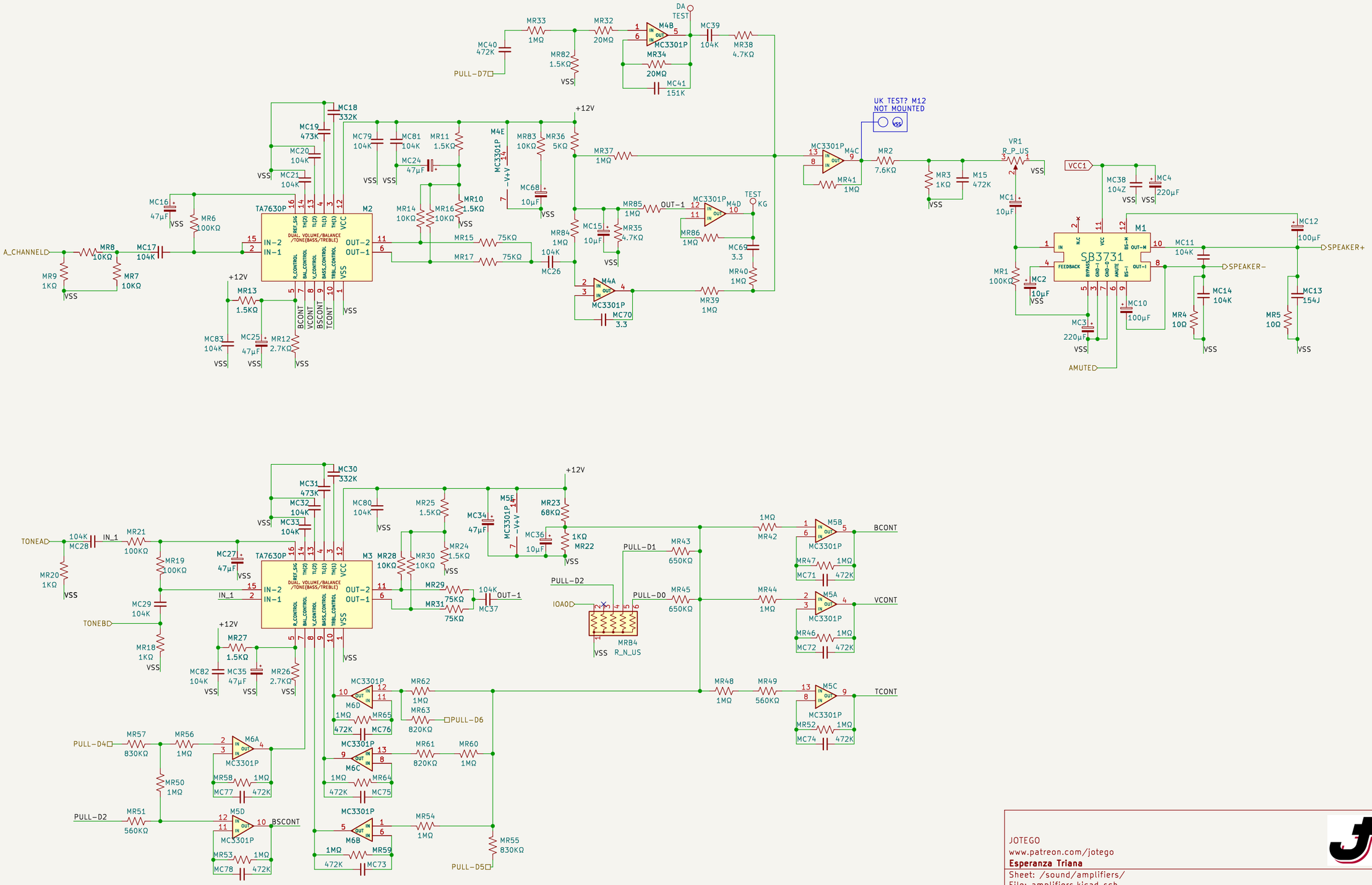

JOTEGO
www.patreon.com/jotego
Esperanza Triana

Sheet: /sound/amplifiers/
File: amplifiers.kicad_sch

Title: The Fairyland Story

Size: A3	Date: 2023-10-02	**Rev: José Tejada G.**
KiCad E.D.A. kicad-cli 7.0.10-7.0.10~ubuntu20.04.1		Id: 11/11