PSAC

File: psac.kicad_sch

pcm

File: pcm.kicad_sch

JOTEGO

Sheet: /

File: rungun.kicad_sch

Title:

Size: A3	Date:	Rev:
KiCad E.D.A. 8.0.9		Id: 1/4

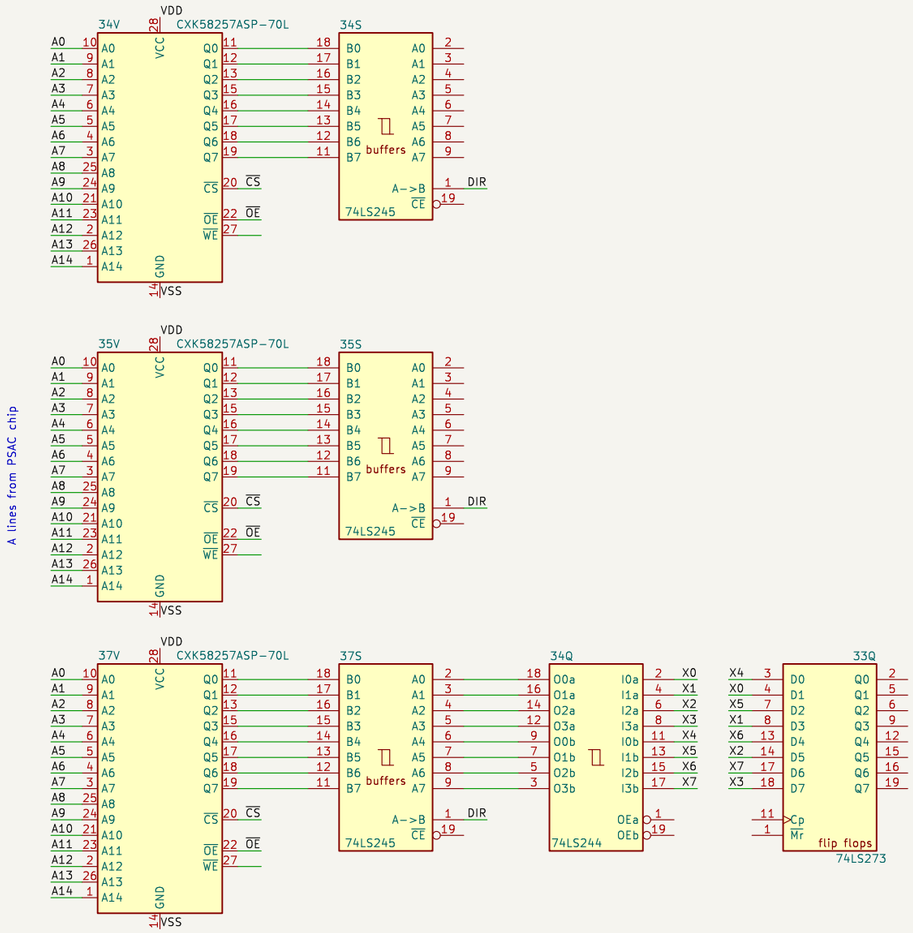

JOTEGO

Sheet: /PSAC/

File: psac.kicad_sch

Title:

Size: A3	Date:	Rev:
KiCad E.D.A. 8.0.9		Id: 2/4

K054539

File: k054539.kicad_sch

JOTEGO

Sheet: /pcm/

File: pcm.kicad_sch

Title:

Size: A3	Date:	Rev:
KiCad E.D.A. 8.0.9		Id: 3/4

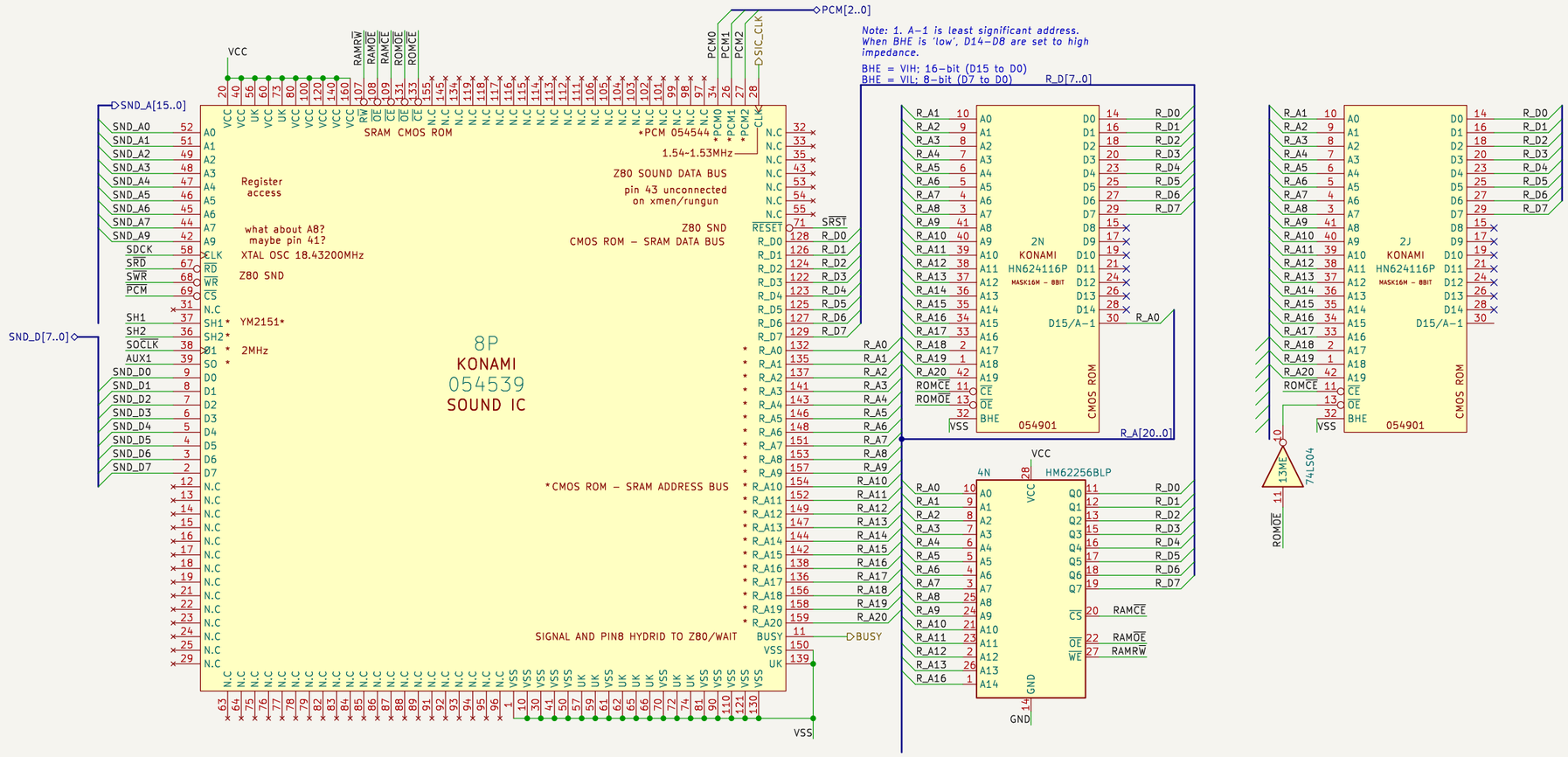

JOTEGO

Sheet: /pcm/K054539/

File: k054539.kicad_sch

Title:

Size: A3	Date:	Rev:
KiCad E.D.A. 8.0.9		Id: 4/4