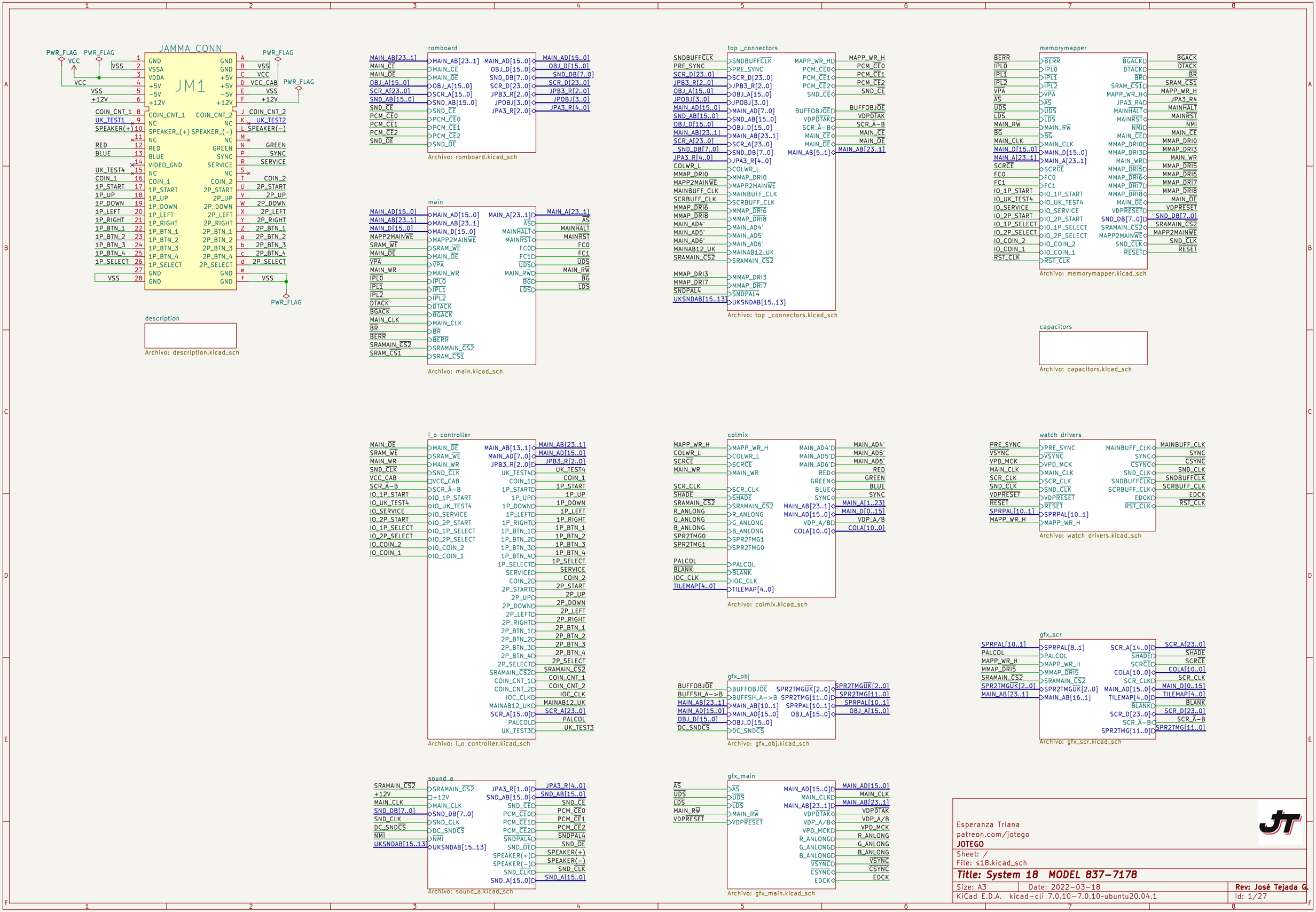

Esperanza Triana
patreon.com/jotego
JOTEGO

Sheet: /
File: s18.kicad_sch

Title: System 18 MODEL 837-7178

Size: A3	Date: 2022-03-18	Rev: José Tejada G.
KiCad E.D.A. kicad-cli 7.0.10-7.0.10~ubuntu20.04.1		Id: 1/27

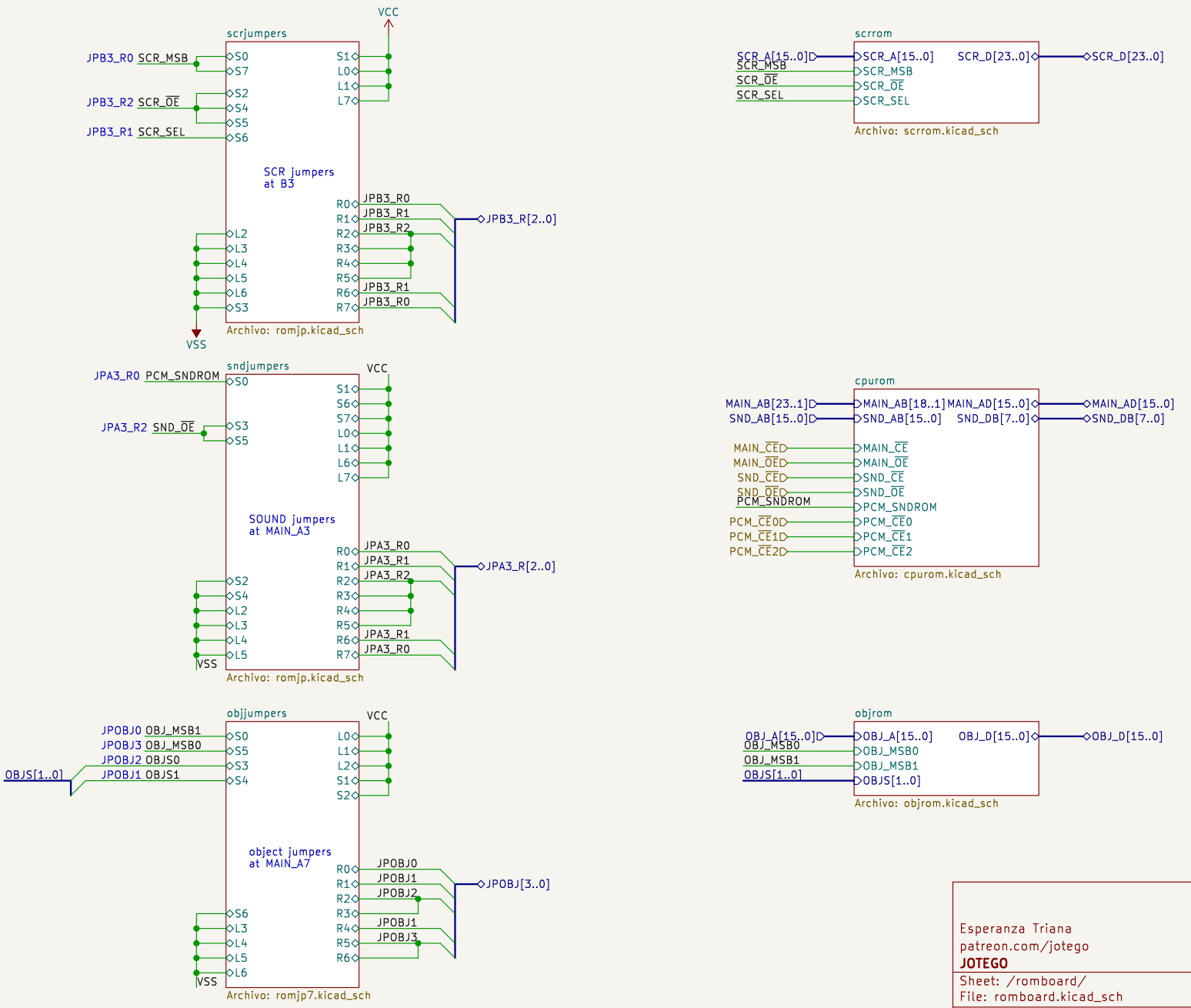

Esperanza Triana
patreon.com/jotego
JOTEGO

Sheet: /romboard/
File: romboard.kicad_sch

Title: System 18 MODEL 837-7178

Size: A4	Date: 2022-03-18	**Rev: José Tejada G.**
KiCad E.D.A. kicad-cli 7.0.10-7.0.10~ubuntu20.04.1		Id: 2/27

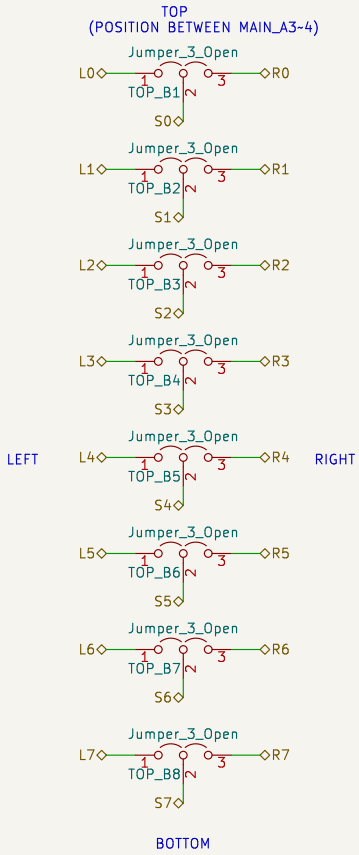

Esperanza Triana
patreon.com/jotego
JOTEGO

Sheet: /romboard/scrjumpers/
File: romjp.kicad_sch

Title: System 18 MODEL 837-7178

Size: A4	Date: 2022-03-18	**Rev: José Tejada G.**
KiCad E.D.A. kicad-cli 7.0.10-7.0.10~ubuntu20.04.1		Id: 3/27

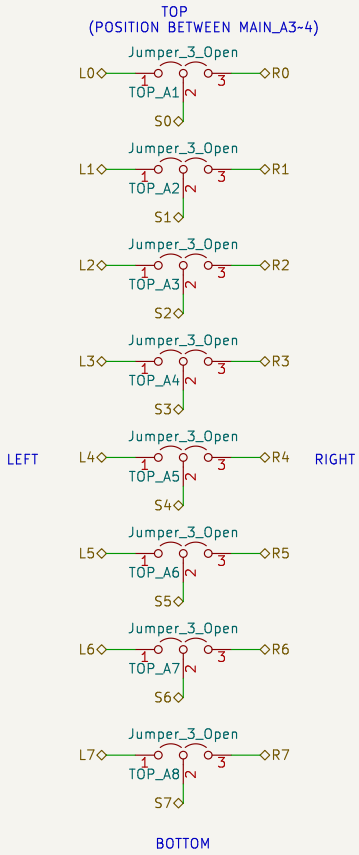

Esperanza Triana
patreon.com/jotego
JOTEGO

Sheet: /romboard/sndjumpers/
File: romjp.kicad_sch

Title: System 18 MODEL 837-7178

Size: A4	Date: 2022-03-18	**Rev: José Tejada G.**
KiCad E.D.A. kicad-cli 7.0.10-7.0.10~ubuntu20.04.1		Id: 4/27

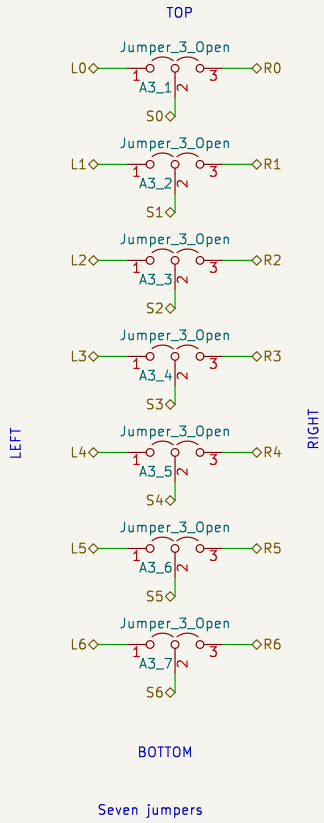

Seven jumpers

Esperanza Triana
patreon.com/jotego
JOTEGO

Sheet: /romboard/objjumpers/
File: romjp7.kicad_sch

Title: System 18 MODEL 837-7178

Size: A4	Date: 2022-03-18	**Rev: José Tejada G.**
KiCad E.D.A. kicad-cli 7.0.10-7.0.10~ubuntu20.04.1		Id: 5/27

SCROLL ROM

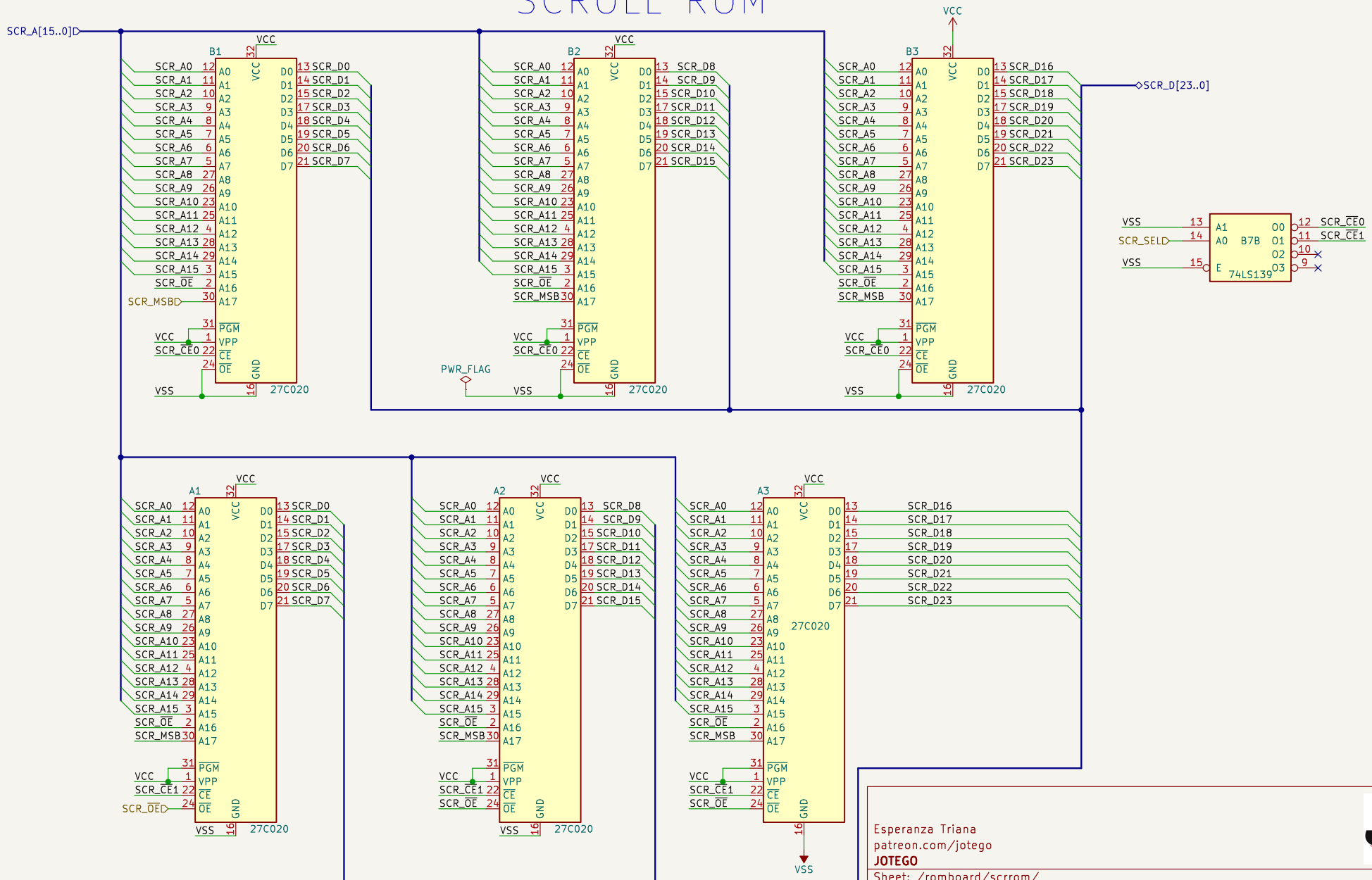

Esperanza Triana
patreon.com/jotego
JOTEGO

Sheet: /romboard/scrrom/
File: scrrom.kicad_sch

Title: System 18 MODEL 837-7178

Size: A4	Date: 2022-03-18	Rev: José Tejada G.
KiCad E.D.A. kicad-cli 7.0.10-7.0.10~ubuntu20.04.1		Id: 6/27

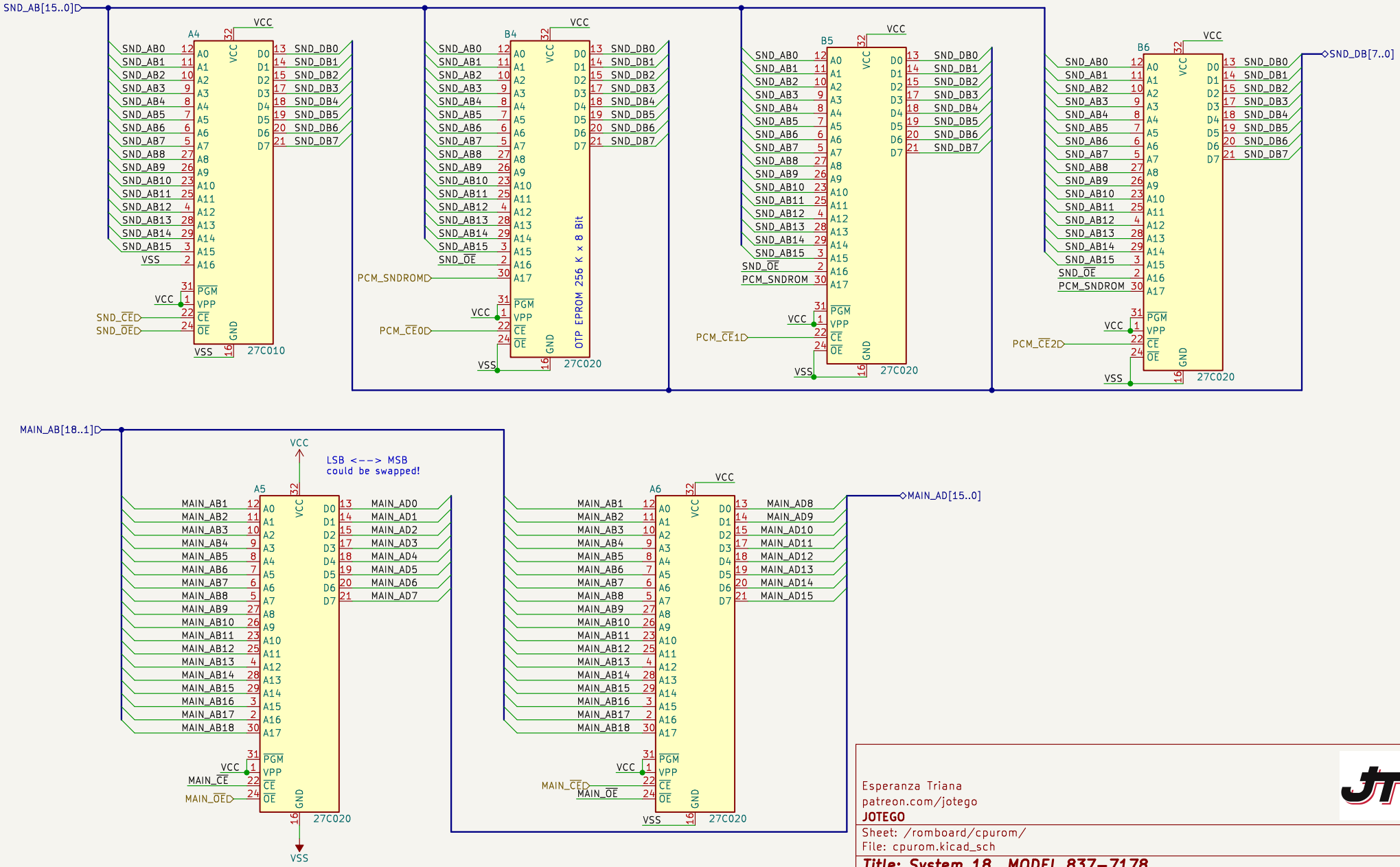

Esperanza Triana
patreon.com/jotego
JOTEGO

Sheet: /romboard/cpurom/
File: cpurom.kicad_sch

Title: System 18 MODEL 837-7178

Size: A4	Date: 2022-03-18	Rev: José Tejada G.
KiCad E.D.A. kicad-cli 7.0.10-7.0.10~ubuntu20.04.1		Id: 7/27

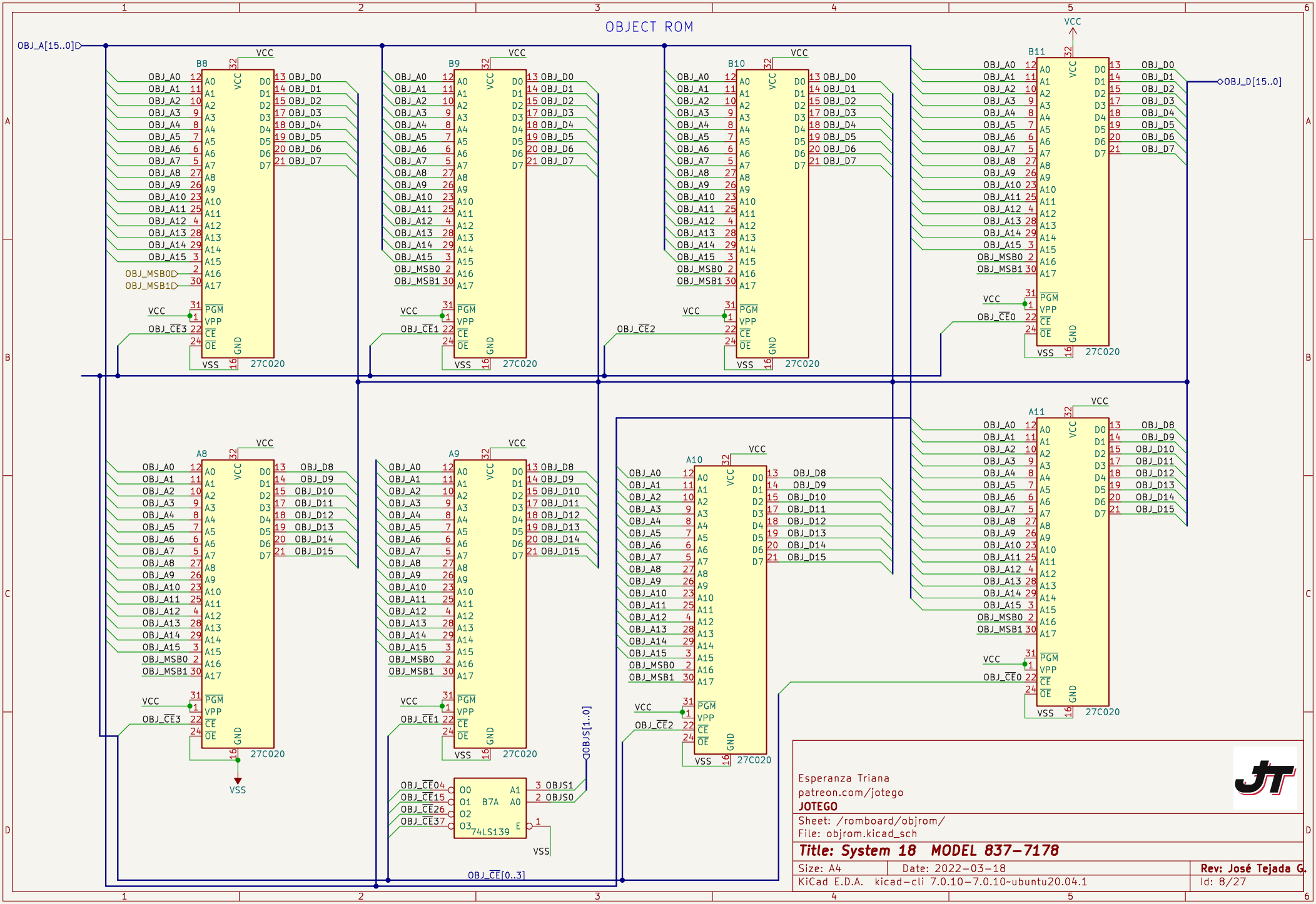
OBJECT ROM
OBJ_A[15..0]
OBJ_D[15..0]
B8
B9
B10
B11
A8
A9
A10
A11
27C020
B7A
74LS139
OBJS[1..0]
OBJ_CE[0..3]
OBJ_CE0
OBJ_CE1
OBJ_CE2
OBJ_CE3
OBJ_MSB0
OBJ_MSB1
VCC
VSS
Esperanza Triana
patreon.com/jotego
JOTEGO
Sheet: /romboard/objrom/
File: objrom.kicad_sch
Title: System 18 MODEL 837-7178
Size: A4
Date: 2022-03-18
Rev: José Tejada G.
KiCad E.D.A. kicad-cli 7.0.10-7.0.10~ubuntu20.04.1
Id: 8/27

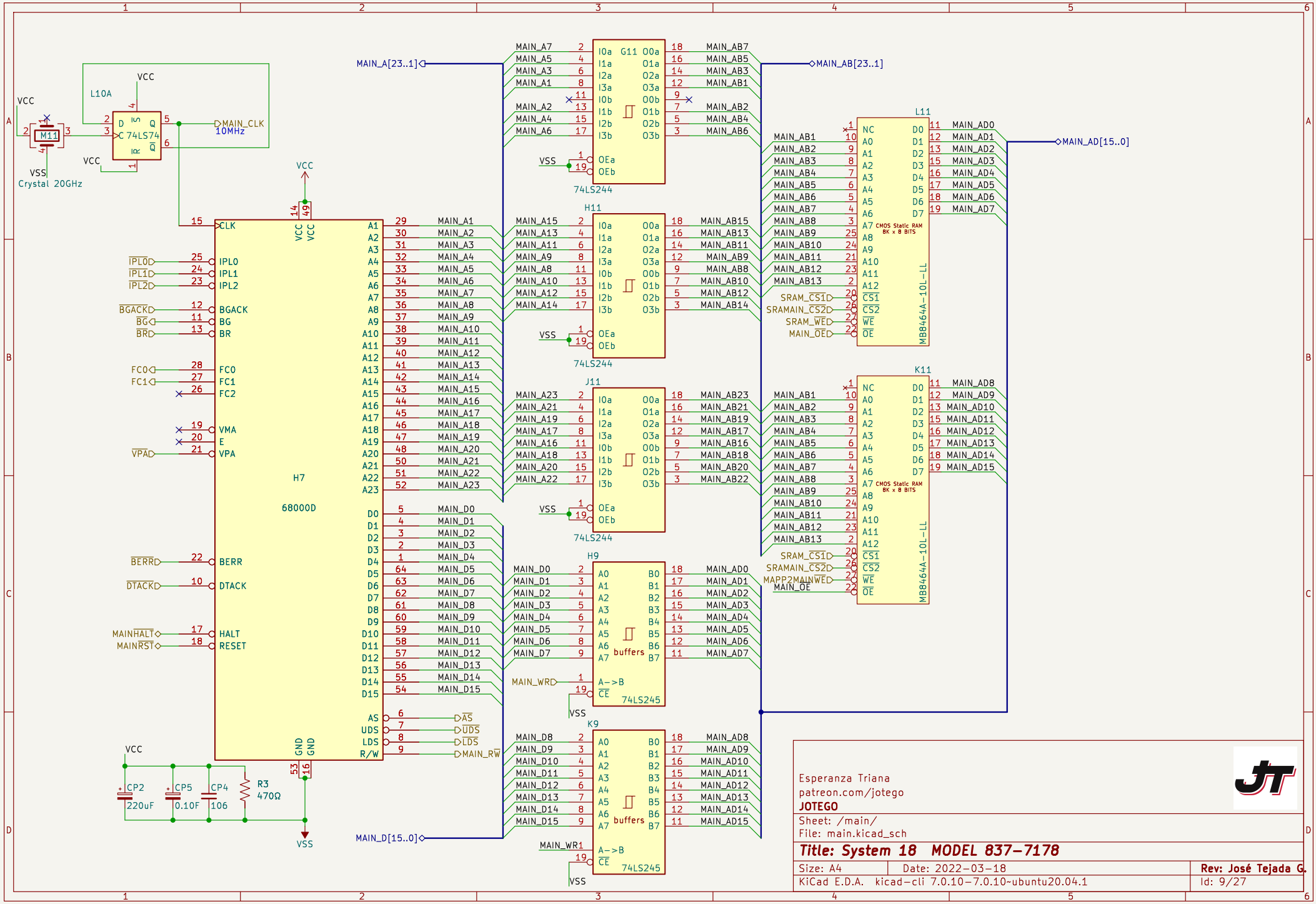
L10A
74LS74
M11
Crystal 20GHz
MAIN_CLK
10MHz
VCC
VSS
H7
68000D
CLK
IPL0
IPL1
IPL2
BGACK
BG
BR
FC0
FC1
FC2
VMA
E
VPA
BERR
DTACK
HALT
RESET
MAIN_A[23..1]
MAIN_D[15..0]
MAIN_RW
AS
UDS
LDS
CP2
220uF
CP5
0.10F
CP4
106
R3
470Ω
H11
J11
H9
K9
74LS244
74LS245
buffers
MAIN_WR
MAIN_WR1
MAIN_AB[23..1]
L11
K11
MB8464A-10L-LL
CMOS Static RAM
8K x 8 BITS
SRAM_CS1
SRAMAIN_CS2
SRAM_WE
MAIN_OE
MAPP2MAINWE
MAIN_AD[15..0]
Esperanza Triana
patreon.com/jotego
JOTEGO
Sheet: /main/
File: main.kicad_sch
Title: System 18 MODEL 837-7178
Size: A4
Date: 2022-03-18
Rev: José Tejada G.
KiCad E.D.A. kicad-cli 7.0.10-7.0.10~ubuntu20.04.1
Id: 9/27

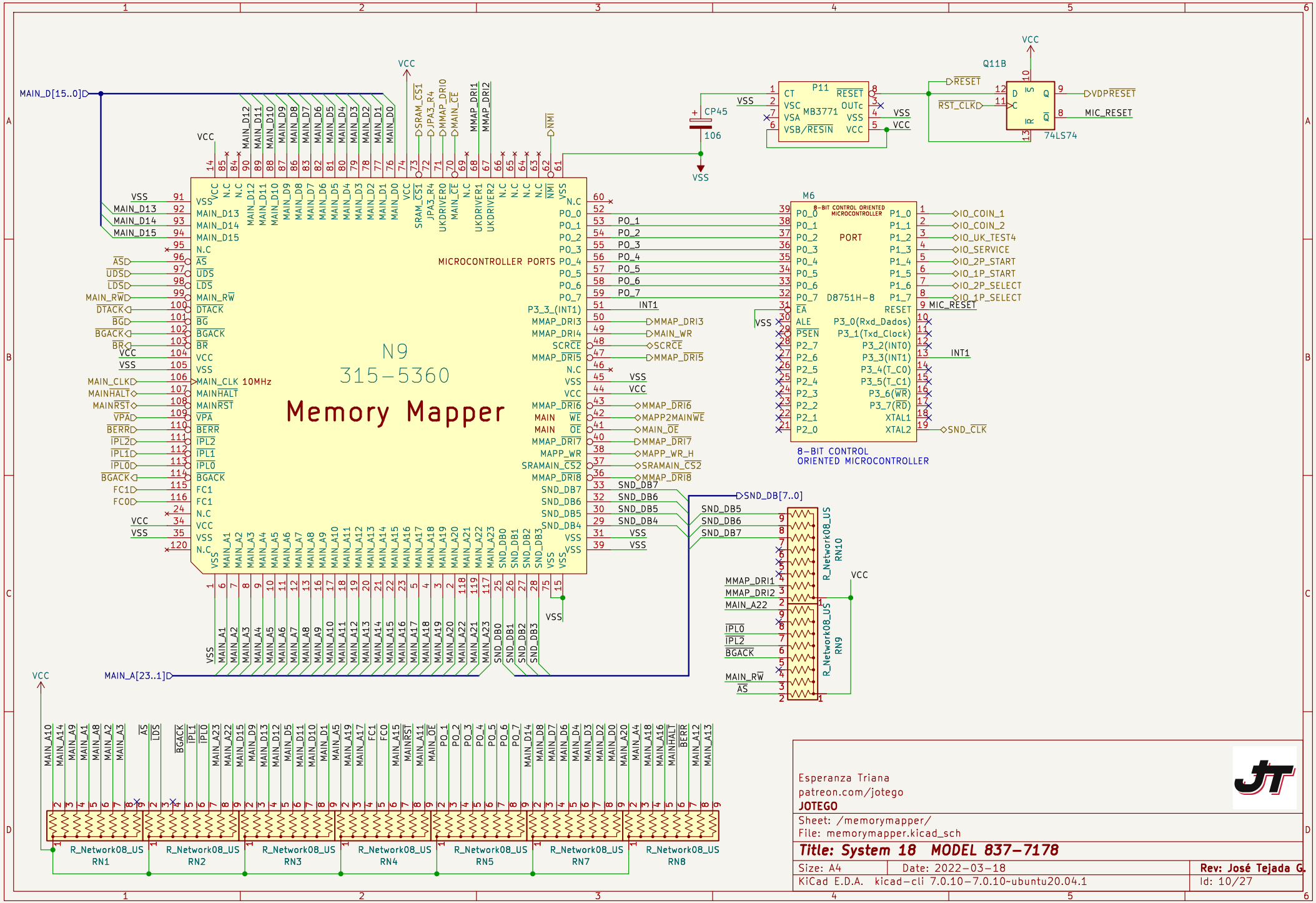

Esperanza Triana
patreon.com/jotego
JOTEGO

Sheet: /memorymapper/
File: memorymapper.kicad_sch

Title: System 18 MODEL 837-7178

Size: A4	Date: 2022-03-18	**Rev: José Tejada G.**
KiCad E.D.A. kicad-cli 7.0.10-7.0.10~ubuntu20.04.1		Id: 10/27

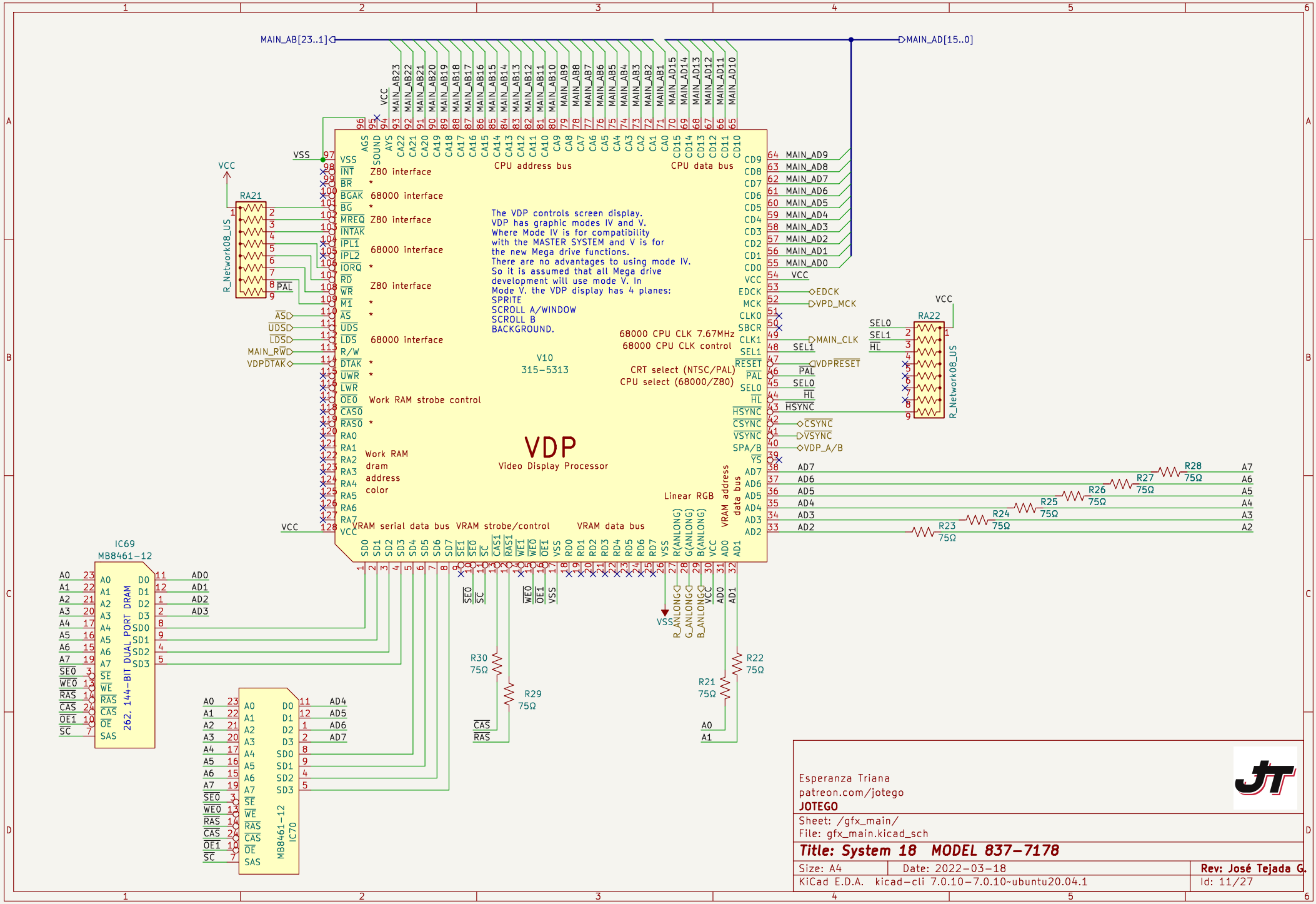

Esperanza Triana
patreon.com/jotego
JOTEGO

Sheet: /gfx_main/
File: gfx_main.kicad_sch

Title: System 18 MODEL 837-7178

Size: A4	Date: 2022-03-18	**Rev: José Tejada G.**
KiCad E.D.A. kicad-cli 7.0.10-7.0.10~ubuntu20.04.1		Id: 11/27

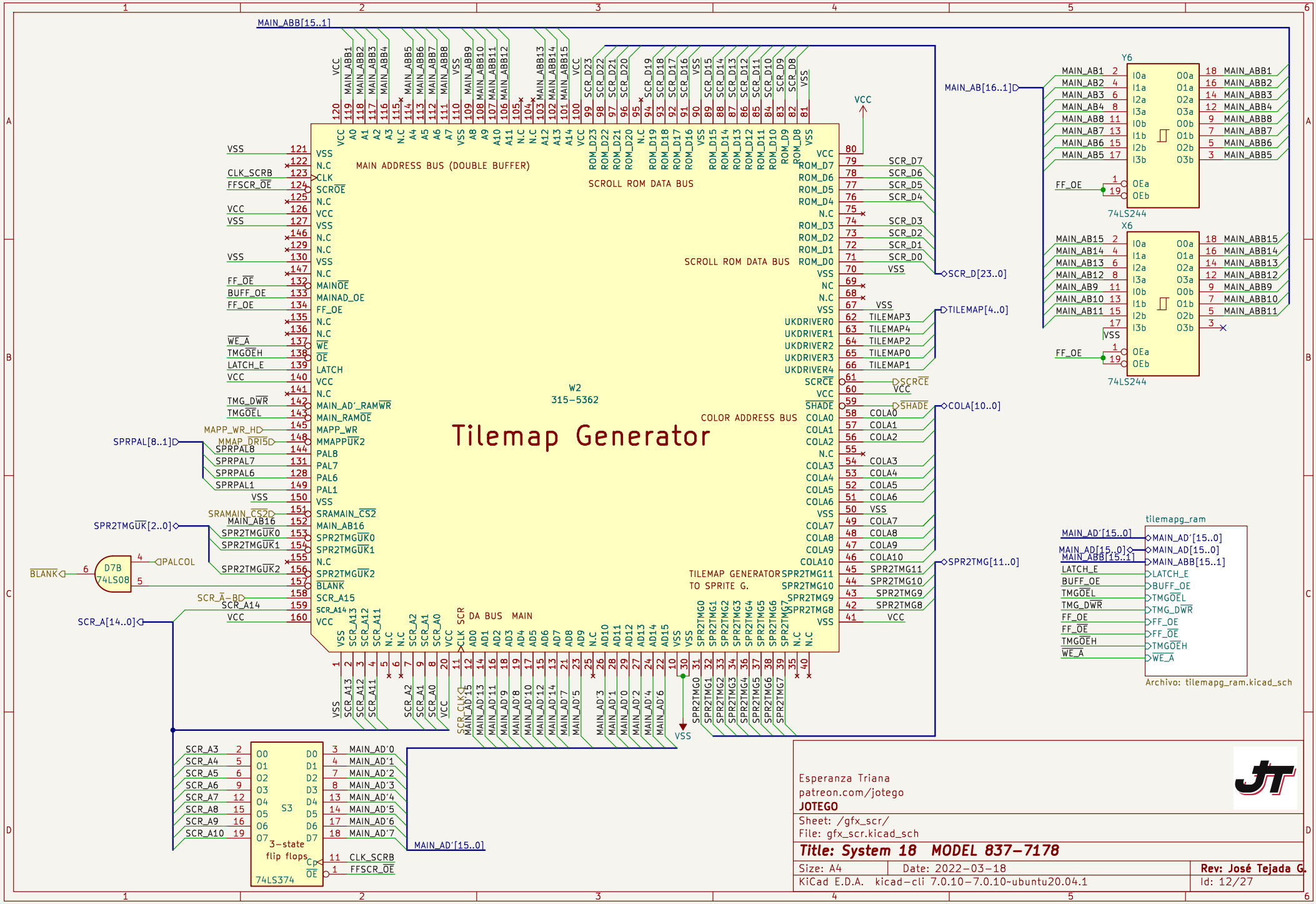
Tilemap Generator
W2
315-5362
MAIN ADDRESS BUS (DOUBLE BUFFER)
SCROLL ROM DATA BUS
COLOR ADDRESS BUS
TILEMAP GENERATOR TO SPRITE G.
DA BUS MAIN
MAIN_ABB[15..1]
MAIN_AB[16..1]
SCR_D[23..0]
TILEMAP[4..0]
COLA[10..0]
SPR2TMG[11..0]
SPRPAL[8..1]
SPR2TMGUK[2..0]
SCR_A[14..0]
MAIN_AD'[15..0]
Y6
74LS244
X6
74LS244
D7B
74LS08
S3
3-state flip flops
74LS374
tilemapg_ram
Archivo: tilemapg_ram.kicad_sch
Esperanza Triana
patreon.com/jotego
JOTEGO
Sheet: /gfx_scr/
File: gfx_scr.kicad_sch
Title: System 18 MODEL 837-7178
Size: A4
Date: 2022-03-18
Rev: José Tejada G.
KiCad E.D.A. kicad-cli 7.0.10-7.0.10~ubuntu20.04.1
Id: 12/27

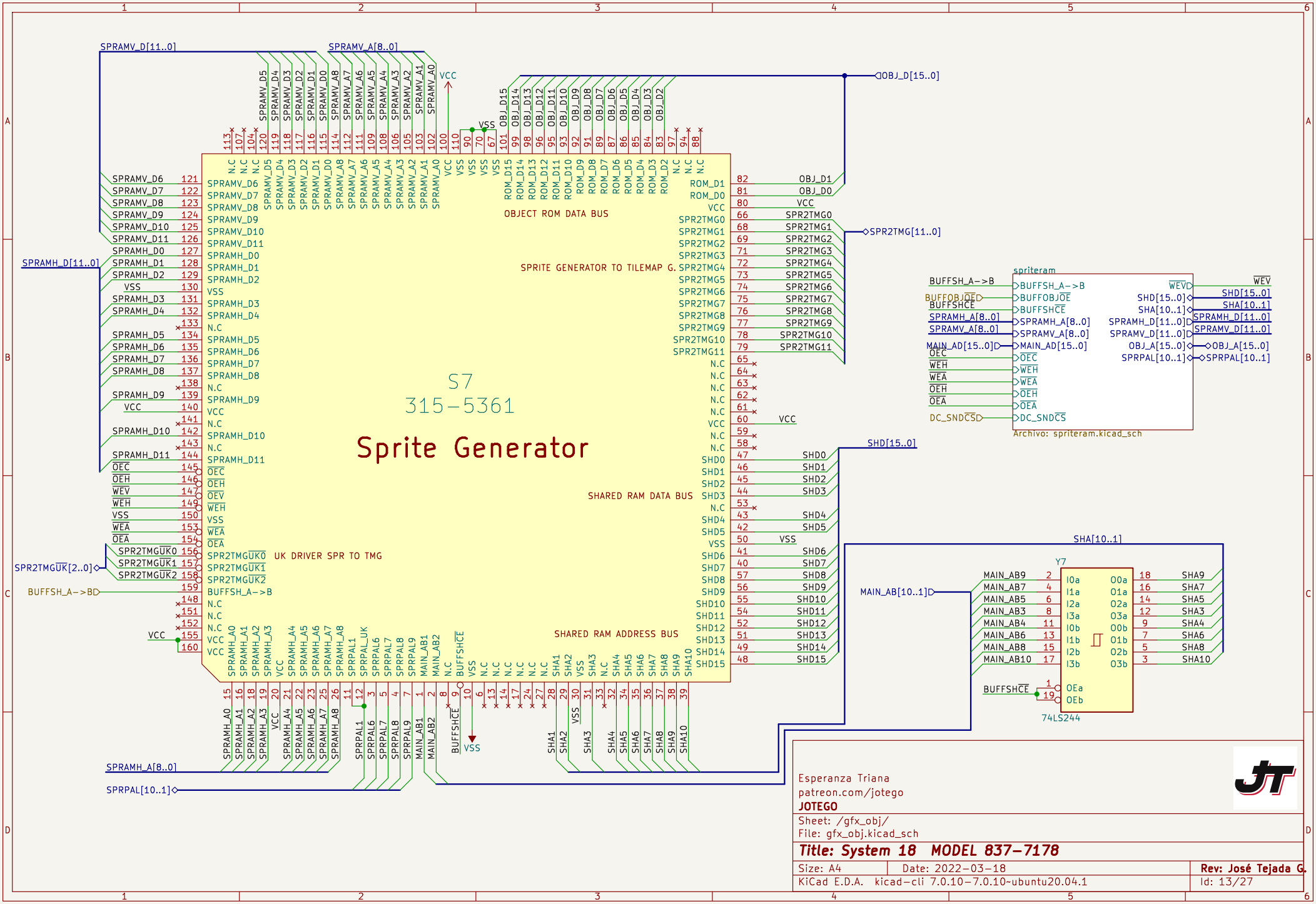
S7
315-5361
Sprite Generator
OBJECT ROM DATA BUS
SPRITE GENERATOR TO TILEMAP G.
SHARED RAM DATA BUS
SHARED RAM ADDRESS BUS
UK DRIVER SPR TO TMG
SPRAMV_D[11..0]
SPRAMV_A[8..0]
SPRAMH_D[11..0]
SPRAMH_A[8..0]
SPRPAL[10..1]
SPR2TMGUK[2..0]
BUFFSH_A->B
OBJ_D[15..0]
SPR2TMG[11..0]
SHD[15..0]
SHA[10..1]
MAIN_AB[10..1]
spriteram
Archivo: spriteram.kicad_sch
Y7
74LS244
Esperanza Triana
patreon.com/jotego
JOTEGO
Sheet: /gfx_obj/
File: gfx_obj.kicad_sch
Title: System 18 MODEL 837-7178
Size: A4
Date: 2022-03-18
Rev: José Tejada G.
KiCad E.D.A. kicad-cli 7.0.10-7.0.10~ubuntu20.04.1
Id: 13/27

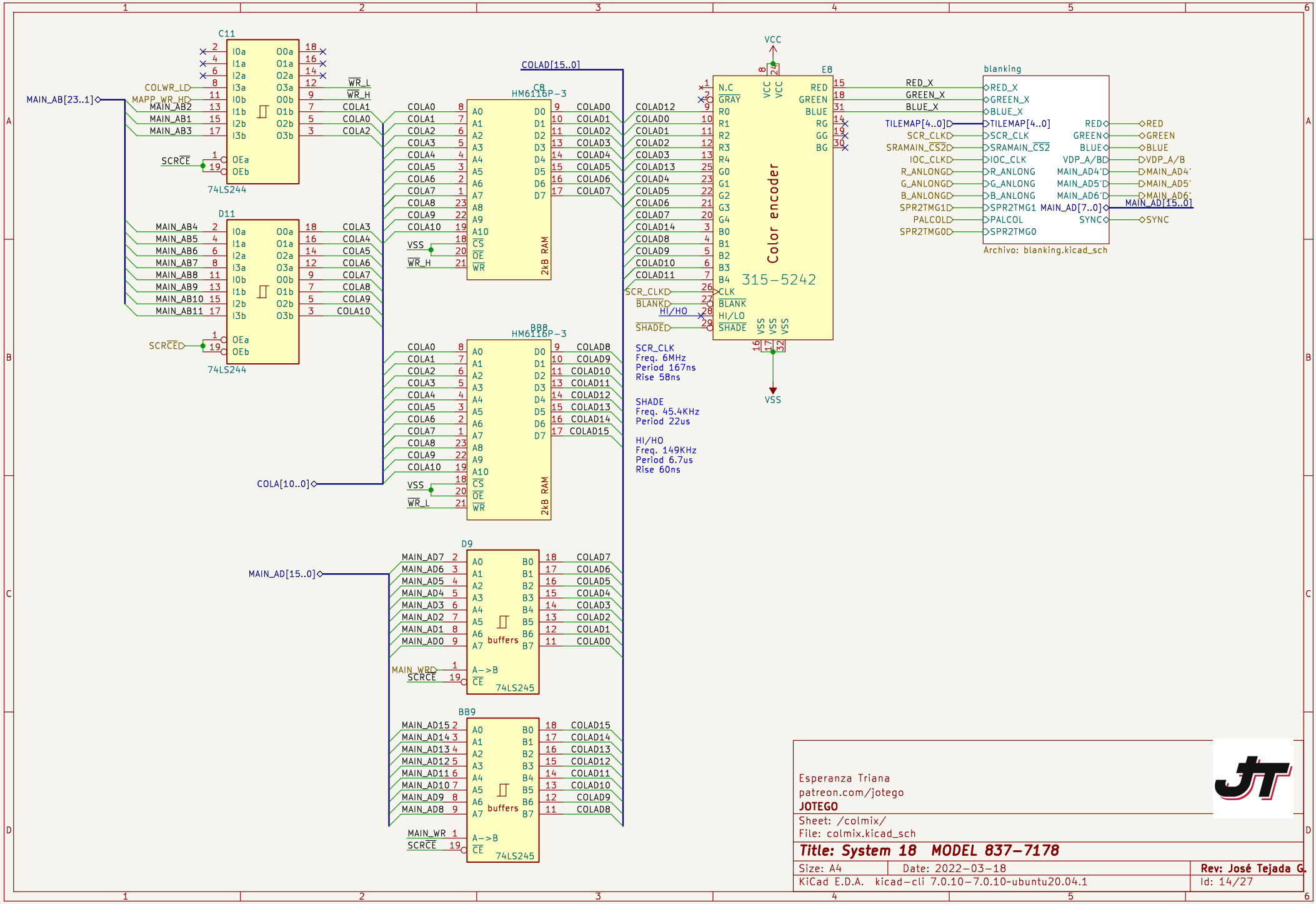
C11
74LS244
D11
74LS244
C8
HM6116P-3
2kB RAM
BB8
HM6116P-3
2kB RAM
D9
74LS245
BB9
74LS245
buffers
E8
Color encoder
315-5242
blanking
Archivo: blanking.kicad_sch
MAIN_AB[23..1]
COLWR_LD
MAPP_WR_HD
SCRCE
SCRCED
COLA[10..0]
COLAD[15..0]
MAIN_AD[15..0]
MAIN_WRD
MAIN_WR
VCC
VSS
SCR_CLK
Freq. 6MHz
Period 167ns
Rise 58ns
SHADE
Freq. 45.4KHz
Period 22us
HI/HO
Freq. 149KHz
Period 6.7us
Rise 60ns
Esperanza Triana
patreon.com/jotego
JOTEGO
Sheet: /colmix/
File: colmix.kicad_sch
Title: System 18 MODEL 837-7178
Size: A4
Date: 2022-03-18
Rev: José Tejada G.
KiCad E.D.A. kicad-cli 7.0.10-7.0.10~ubuntu20.04.1
Id: 14/27

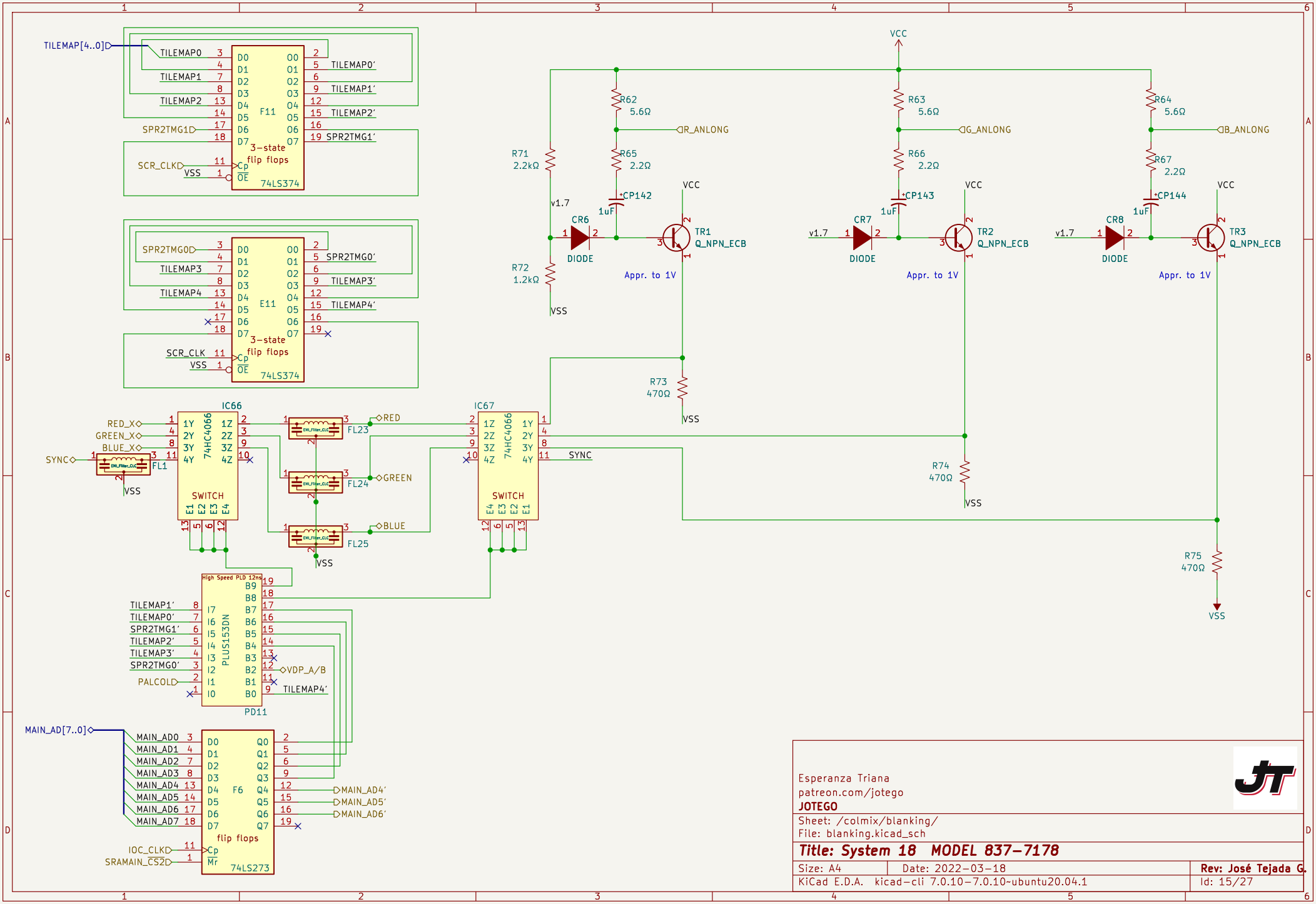

Esperanza Triana
patreon.com/jotego
JOTEGO

Sheet: /colmix/blanking/
File: blanking.kicad_sch

Title: System 18 MODEL 837-7178

Size: A4	Date: 2022-03-18	Rev: José Tejada G.
KiCad E.D.A. kicad-cli 7.0.10-7.0.10~ubuntu20.04.1		Id: 15/27

Esperanza Triana
patreon.com/jotego
JOTEGO

Sheet: /capacitors/
File: capacitors.kicad_sch

Title: System 18 MODEL 837-7178

Size: A4	Date: 2022-03-18	**Rev: José Tejada G.**
KiCad E.D.A. kicad-cli 7.0.10-7.0.10~ubuntu20.04.1		Id: 16/27

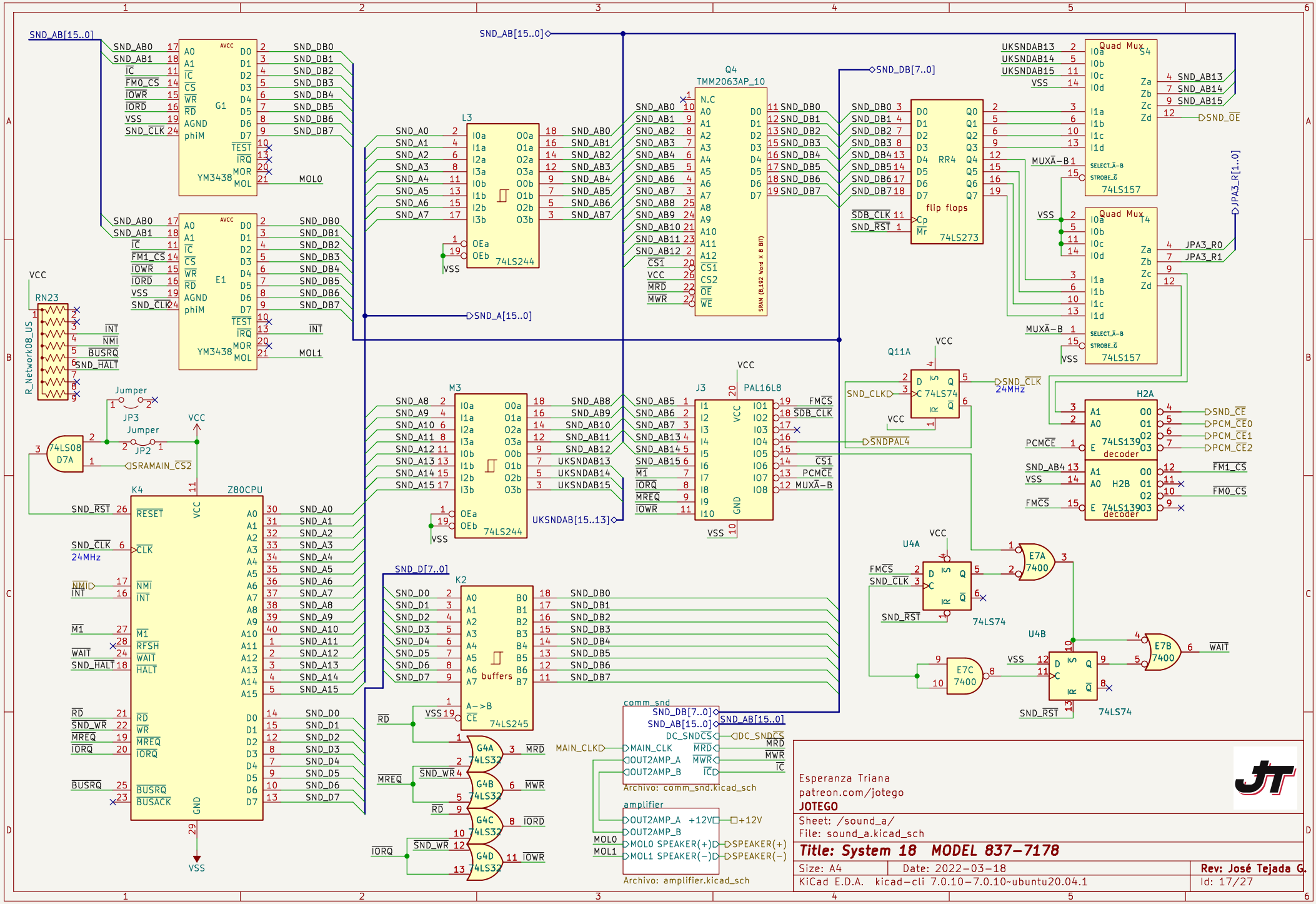
SND_AB[15..0]
G1
YM3438
E1
YM3438
L3
74LS244
Q4
TMM2063AP_10
SRAM (8,192 Word X 8 Bit)
SND_A[15..0]
SND_DB[7..0]
RR4
flip flops
74LS273
Quad Mux
74LS157
Quad Mux
74LS157
JPA3_R[1..0]
RN23
R_Network08_US
Jumper
JP3
JP2
74LS08
D7A
SRAMAIN_CS2
K4
Z80CPU
M3
74LS244
J3
PAL16L8
UKSNDAB[15..13]
Q11A
74LS74
24MHz
H2A
74LS139
decoder
H2B
74LS139
decoder
U4A
74LS74
E7A
7400
E7C
7400
U4B
74LS74
E7B
7400
K2
buffers
74LS245
SND_D[7..0]
G4A
74LS32
G4B
74LS32
G4C
74LS32
G4D
74LS32
comm_snd
Archivo: comm_snd.kicad_sch
amplifier
Archivo: amplifier.kicad_sch
Esperanza Triana
patreon.com/jotego
JOTEGO
Sheet: /sound_a/
File: sound_a.kicad_sch
Title: System 18 MODEL 837-7178
Size: A4
Date: 2022-03-18
Rev: José Tejada G.
KiCad E.D.A. kicad-cli 7.0.10-7.0.10~ubuntu20.04.1
Id: 17/27

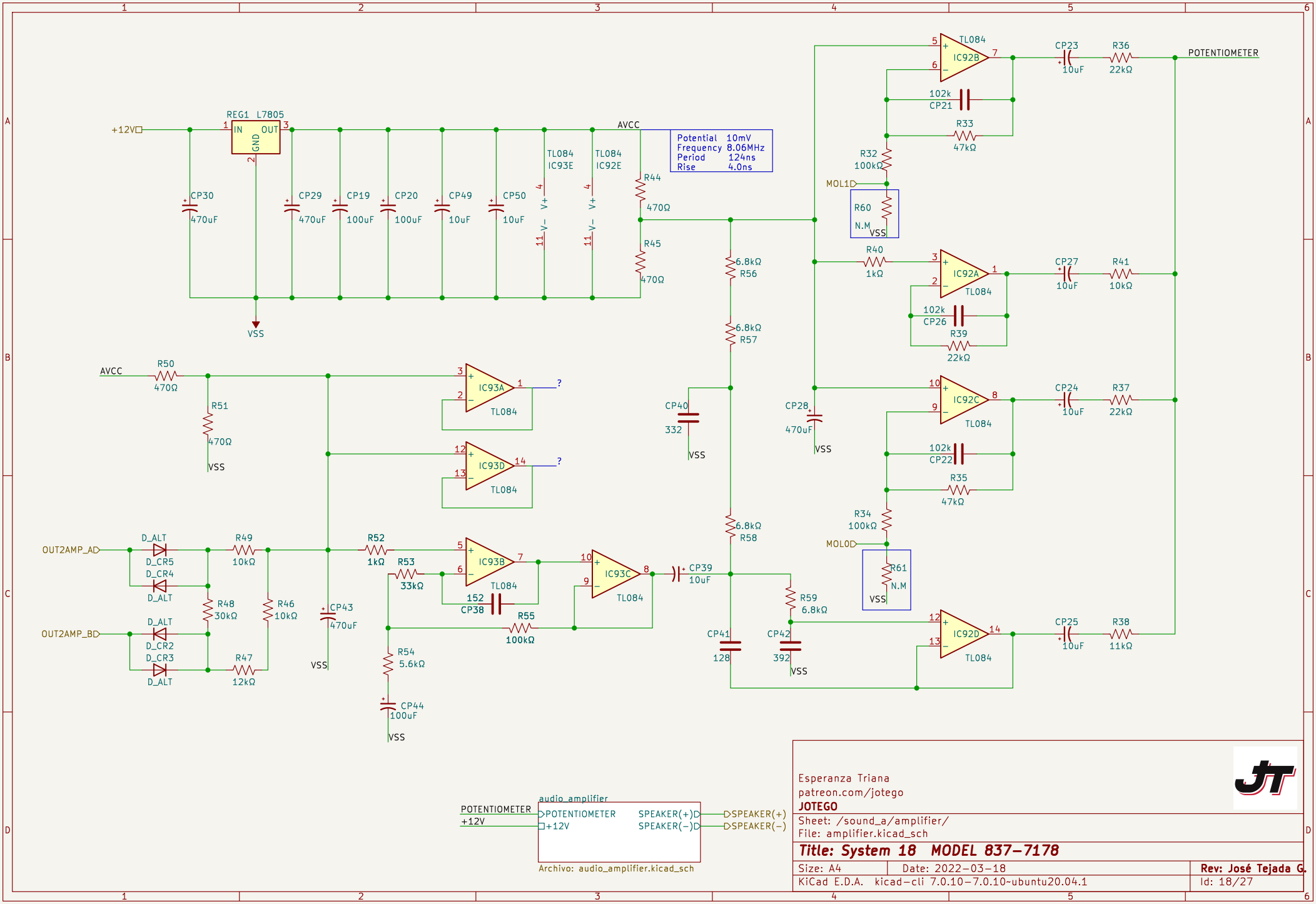
+12V
REG1 L7805
IN
OUT
GND
CP30 470uF
CP29 470uF
CP19 100uF
CP20 100uF
CP49 10uF
CP50 10uF
TL084 IC93E
TL084 IC92E
AVCC
Potential 10mV
Frequency 8.06MHz
Period 124ns
Rise 4.0ns
R44 470Ω
R45 470Ω
VSS
R50 470Ω
R51 470Ω
IC93A TL084
IC93D TL084
IC93B TL084
IC93C TL084
OUT2AMP_A
OUT2AMP_B
D_ALT
D_CR5
D_CR4
D_CR2
D_CR3
R49 10kΩ
R48 30kΩ
R46 10kΩ
R47 12kΩ
R52 1kΩ
R53 33kΩ
CP43 470uF
152 CP38
R55 100kΩ
R54 5.6kΩ
CP44 100uF
CP39 10uF
6.8kΩ R56
6.8kΩ R57
6.8kΩ R58
CP40 332
CP41 128
CP42 392
R59 6.8kΩ
CP28 470uF
IC92B TL084
IC92A TL084
IC92C TL084
IC92D TL084
102k CP21
R33 47kΩ
R32 100kΩ
MOL1
R60 N.M
R40 1kΩ
102k CP26
R39 22kΩ
102k CP22
R35 47kΩ
R34 100kΩ
MOL0
R61 N.M
CP23 10uF
R36 22kΩ
CP27 10uF
R41 10kΩ
CP24 10uF
R37 22kΩ
CP25 10uF
R38 11kΩ
POTENTIOMETER
audio_amplifier
POTENTIOMETER
+12V
SPEAKER(+)
SPEAKER(−)
Archivo: audio_amplifier.kicad_sch
Esperanza Triana
patreon.com/jotego
JOTEGO
Sheet: /sound_a/amplifier/
File: amplifier.kicad_sch
Title: System 18 MODEL 837-7178
Size: A4
Date: 2022-03-18
Rev: José Tejada G.
KiCad E.D.A. kicad-cli 7.0.10-7.0.10~ubuntu20.04.1
Id: 18/27

MOTHER AND DAUGHTER PCB CONNECTORS

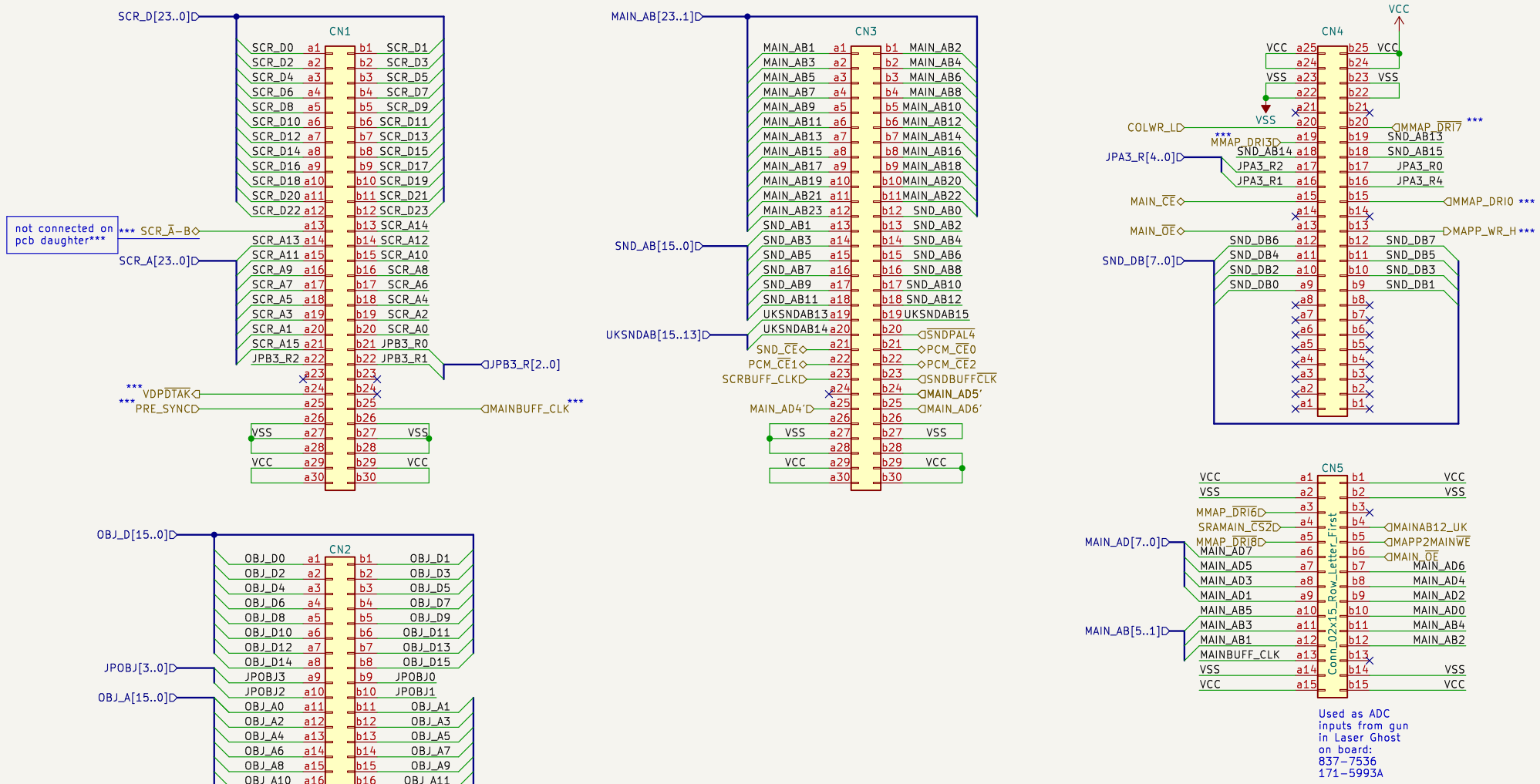

Esperanza Triana
patreon.com/jotego
JOTEGO

Sheet: /top _connectors/
File: top _connectors.kicad_sch

Title: System 18 MODEL 837-7178

Size: A4	Date: 2022-03-18	**Rev: José Tejada G.**
KiCad E.D.A. kicad-cli 7.0.10-7.0.10~ubuntu20.04.1		Id: 19/27

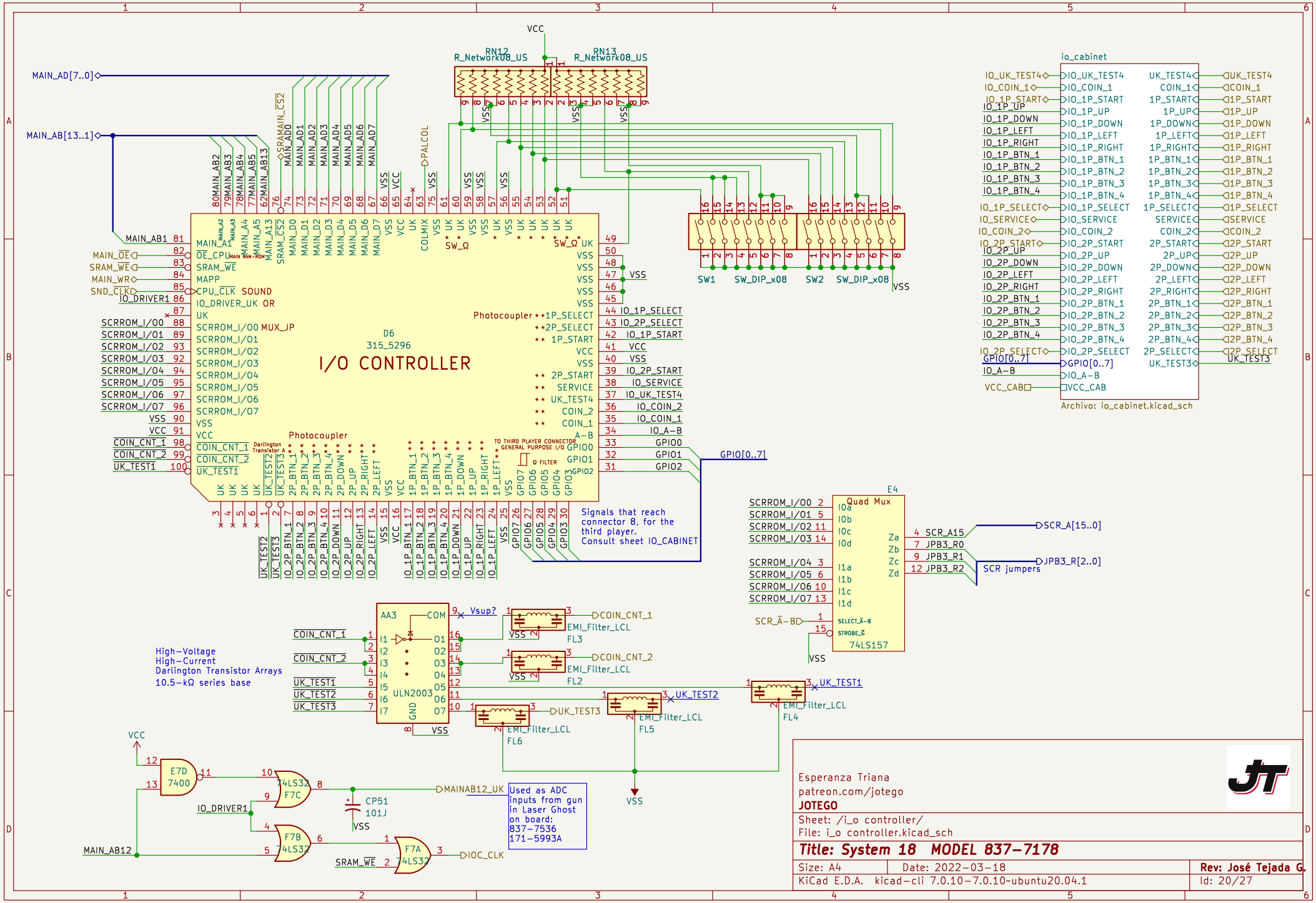
I/O CONTROLLER
D6
315_5296
RN12 R_Network08_US
RN13 R_Network08_US
io_cabinet
Archivo: io_cabinet.kicad_sch
SW1 SW_DIP_x08
SW2 SW_DIP_x08
Photocoupler
TO THIRD PLAYER CONNECTOR
GENERAL PURPOSE I/O
Ω FILTER
Signals that reach connector 8, for the third player. Consult sheet IO_CABINET
E4 Quad Mux 74LS157
SCR jumpers
AA3 ULN2003
High-Voltage
High-Current
Darlington Transistor Arrays
10.5-kΩ series base
EMI_Filter_LCL
E7D 7400
74LS32 F7C
F7B 74LS32
F7A 74LS32
CP51 101J
Used as ADC inputs from gun in Laser Ghost on board: 837-7536 171-5993A
Esperanza Triana
patreon.com/jotego
JOTEGO
Sheet: /i_o controller/
File: i_o controller.kicad_sch
Title: System 18 MODEL 837-7178
Size: A4
Date: 2022-03-18
Rev: José Tejada G.
KiCad E.D.A. kicad-cli 7.0.10-7.0.10~ubuntu20.04.1
Id: 20/27

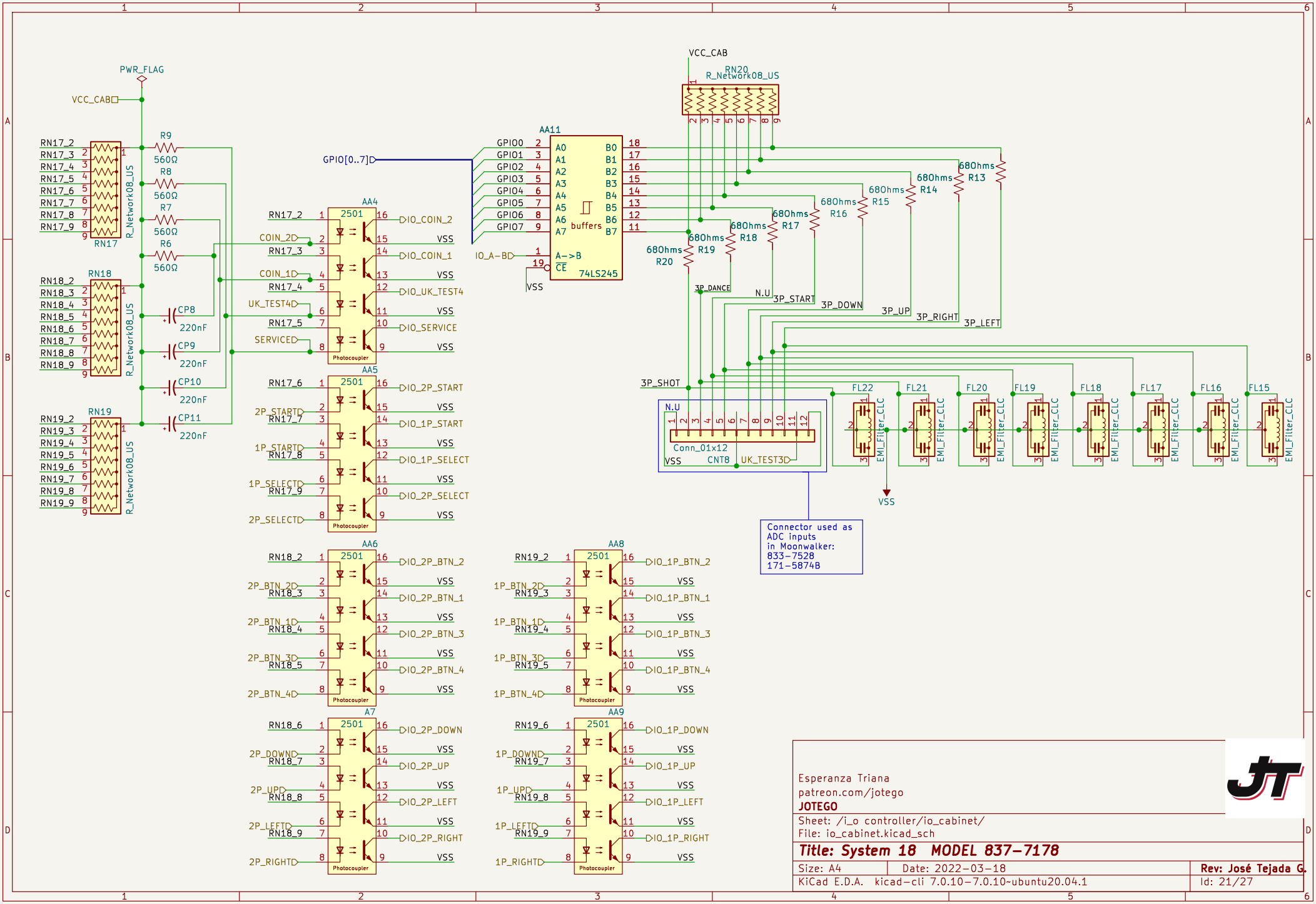

Esperanza Triana
patreon.com/jotego
JOTEGO

Sheet: /i_o controller/io_cabinet/
File: io_cabinet.kicad_sch

Title: System 18 MODEL 837–7178

Size: A4	Date: 2022–03–18	**Rev: José Tejada G.**
KiCad E.D.A. kicad–cli 7.0.10–7.0.10~ubuntu20.04.1		Id: 21/27

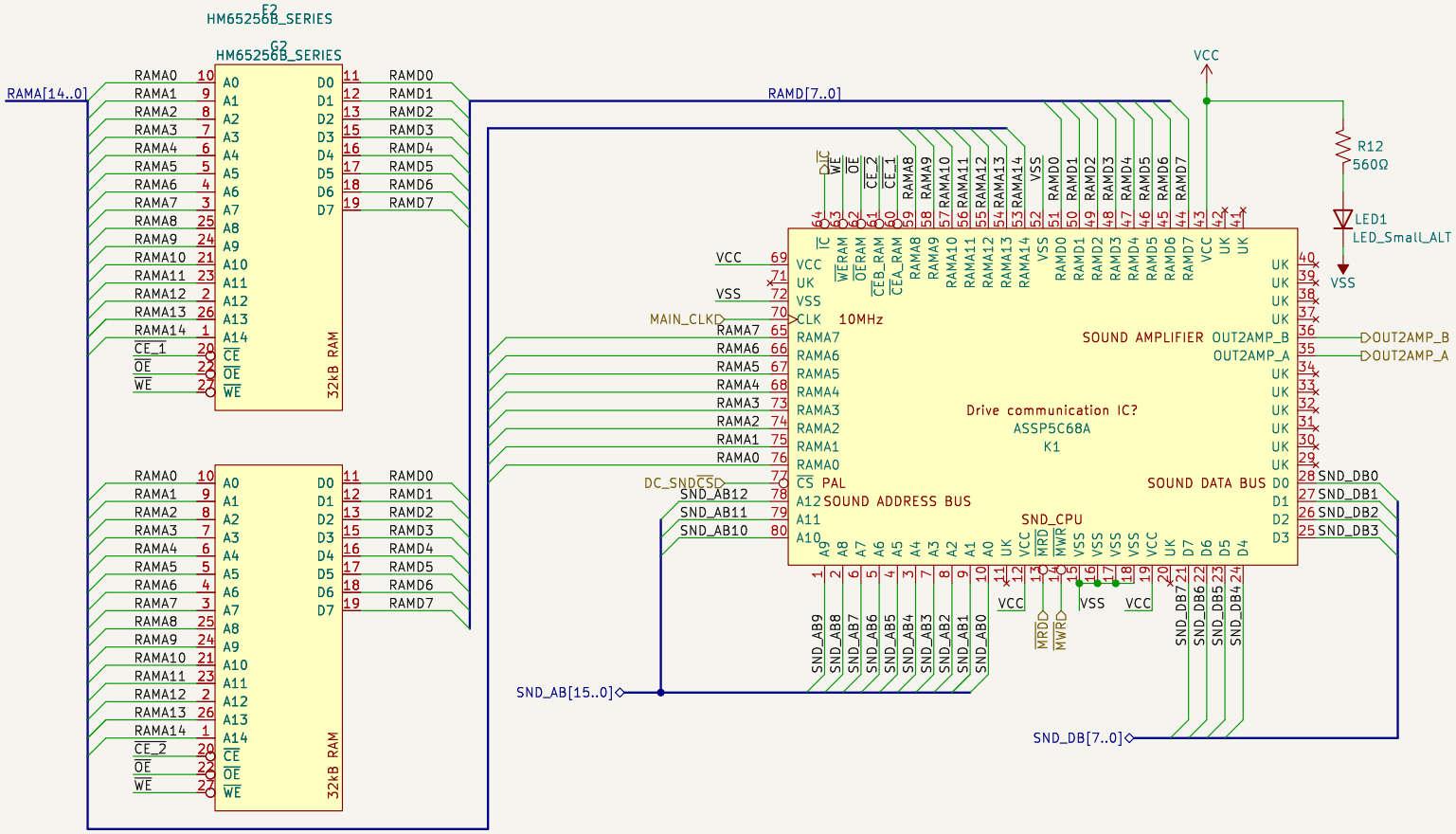

Esperanza Triana
patreon.com/jotego
JOTEGO

Sheet: /sound_a/comm_snd/
File: comm_snd.kicad_sch

Title: System 18 MODEL 837-7178

Size: A4	Date: 2022-03-18	**Rev: José Tejada G.**
KiCad E.D.A. kicad-cli 7.0.10-7.0.10~ubuntu20.04.1		Id: 22/27

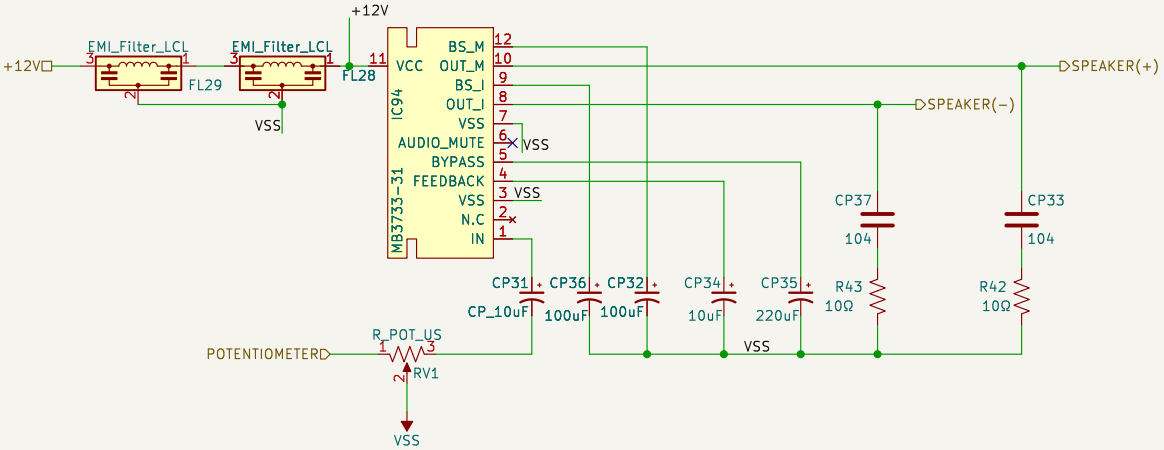

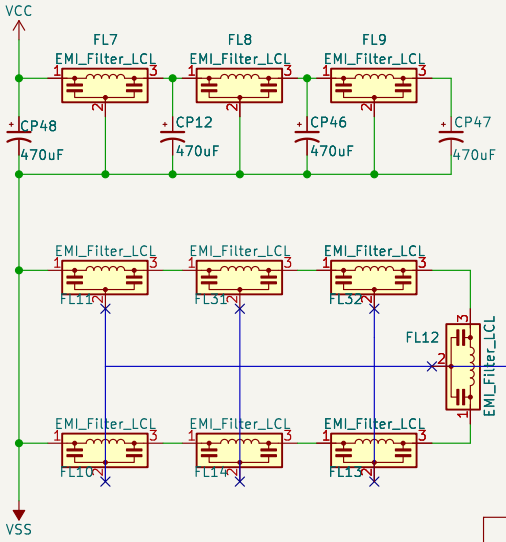

Leaded EMIFI
Three-terminal Capacitor type
DSS6NE52A222p
2200pF 80/-20%
100Vdc 6A -25 to +85°C

A kind of a track is observed between the two PCB layers, as if it were another layer, but there is no certainty about that.
The track seems to be used to delimit or isolate the EMI (ElectroMagnetic Interference) filters.
They may have wanted to isolate the noise between digital and analog devices.

Esperanza Triana
patreon.com/jotego
JOTEGO

Sheet: /sound_a/amplifier/audio_amplifier/
File: audio_amplifier.kicad_sch

Title: System 18 MODEL 837-7178

Size: A4	Date: 2022-03-18	Rev: José Tejada G.
KiCad E.D.A. kicad-cli 7.0.10-7.0.10~ubuntu20.04.1		Id: 23/27

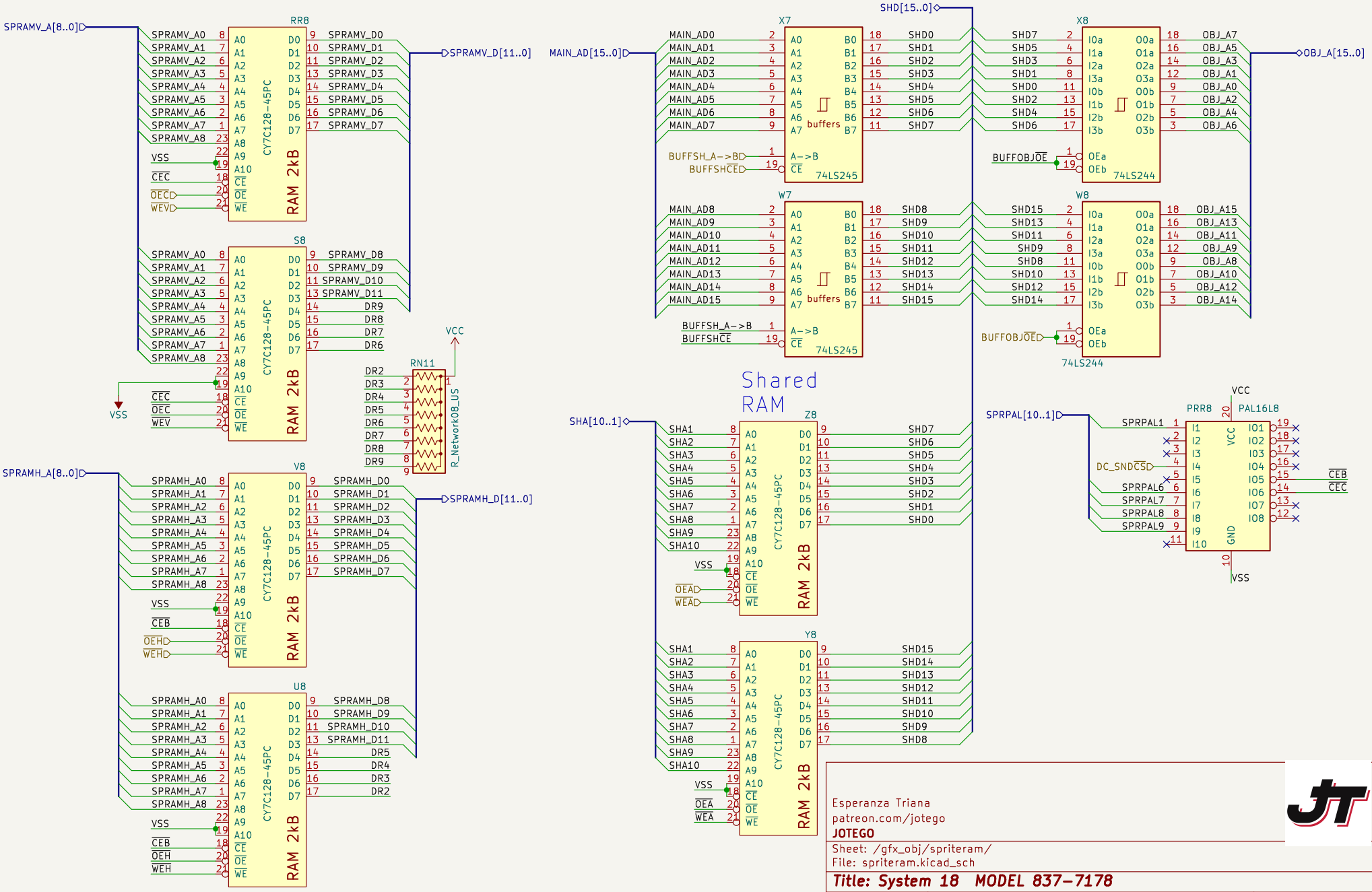

Esperanza Triana
patreon.com/jotego
JOTEGO

Sheet: /gfx_obj/spriteram/
File: spriteram.kicad_sch

Title: System 18 MODEL 837-7178

Size: A4	Date: 2022-03-18	Rev: José Tejada G.
KiCad E.D.A. kicad-cli 7.0.10-7.0.10~ubuntu20.04.1		Id: 24/27

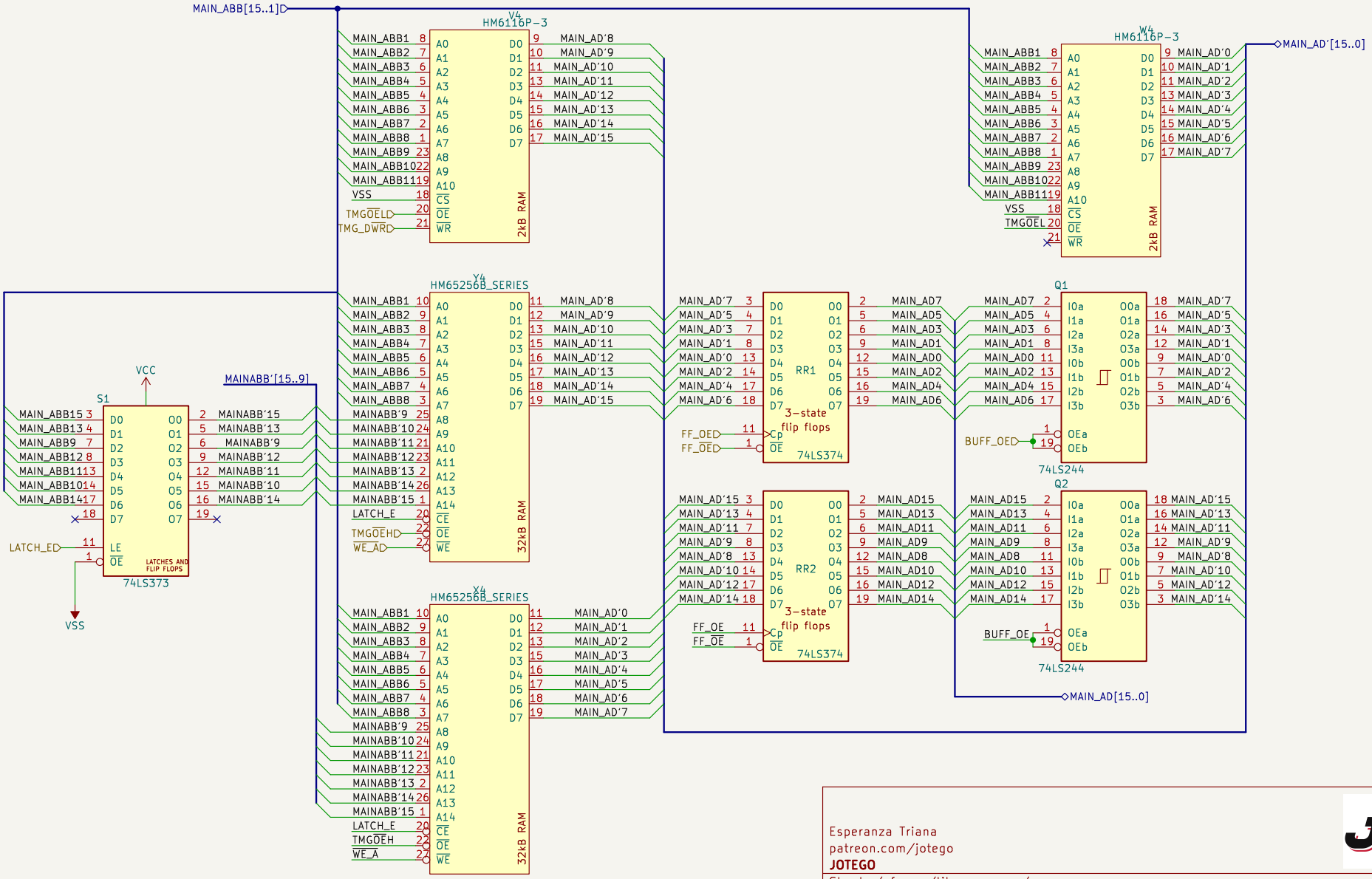

Esperanza Triana
patreon.com/jotego
JOTEGO

Sheet: /gfx_scr/tilemapg_ram/
File: tilemapg_ram.kicad_sch

Title: System 18 MODEL 837-7178

Size: A4	Date: 2022-03-18	**Rev: José Tejada G.**
KiCad E.D.A. kicad-cli 7.0.10-7.0.10~ubuntu20.04.1		Id: 25/27

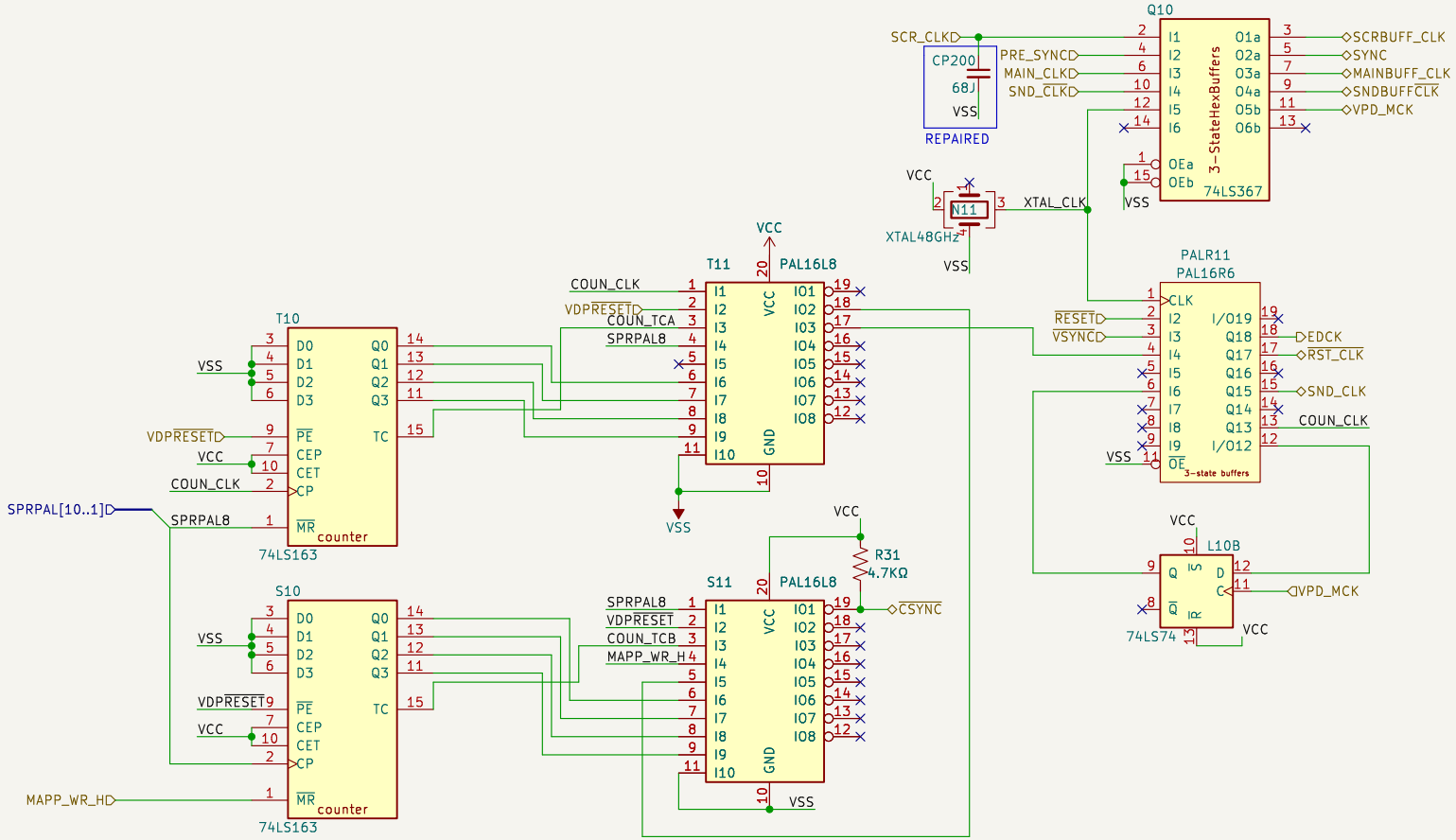

Esperanza Triana
patreon.com/jotego
JOTEGO

Sheet: /watch drivers/
File: watch drivers.kicad_sch

Title: System 18 MODEL 837-7178

Size: A4	Date: 2022-03-18	**Rev: José Tejada G.**
KiCad E.D.A. kicad-cli 7.0.10-7.0.10~ubuntu20.04.1		Id: 26/27

Sega System 18

The Sega System 18 is an arcade game system released by Sega in 1989. The System 18 had a short catalog of games. Most of its boards followed JAMMA standards. Many of these games also had a suicide battery, just like with the Sega System 16 hardware.

Characteristics

Main CPU: Motorola 68000 @ 10 MHz
Sound: Zilog Z80 @ 8 MHz
Sound Chip: 2 x Yamaha YM3438 @ 8 MHz + Ricoh RF5c68 @ 10 MHz
(8 Channel PCM Chip, named as "Sega Custom 315")
Screen resolution: 320 x 224
Palette: 4096 colors
Board Composition: Main Board + ROM Board

Games List

Alien Storm (1990)
Bloxed (1989)
Clutch Hitter (1991)
D.D. Crew (1991)
Desert Breaker (1992)
Laser Ghost (1990)
Michael Jackson's Moonwalker (1990)
Pontoon (1989)
Shadow Dancer (1989)
Wally wo Sagase! (1992)

This work contains a derivative translation of "List of Sega arcade system boards#Sega System 18" from the English Wikipedia, published by its publishers under the GNU Free Documentation License and the Creative Commons Attribution-ShareAlike 3.0 Unported License.

Esperanza Triana
patreon.com/jotego
JOTEGO

Sheet: /description/
File: description.kicad_sch

Title: System 18 MODEL 837-7178

Size: A4	Date: 2022-03-18	**Rev: José Tejada G.**
KiCad E.D.A. kicad-cli 7.0.10-7.0.10~ubuntu20.04.1		Id: 27/27