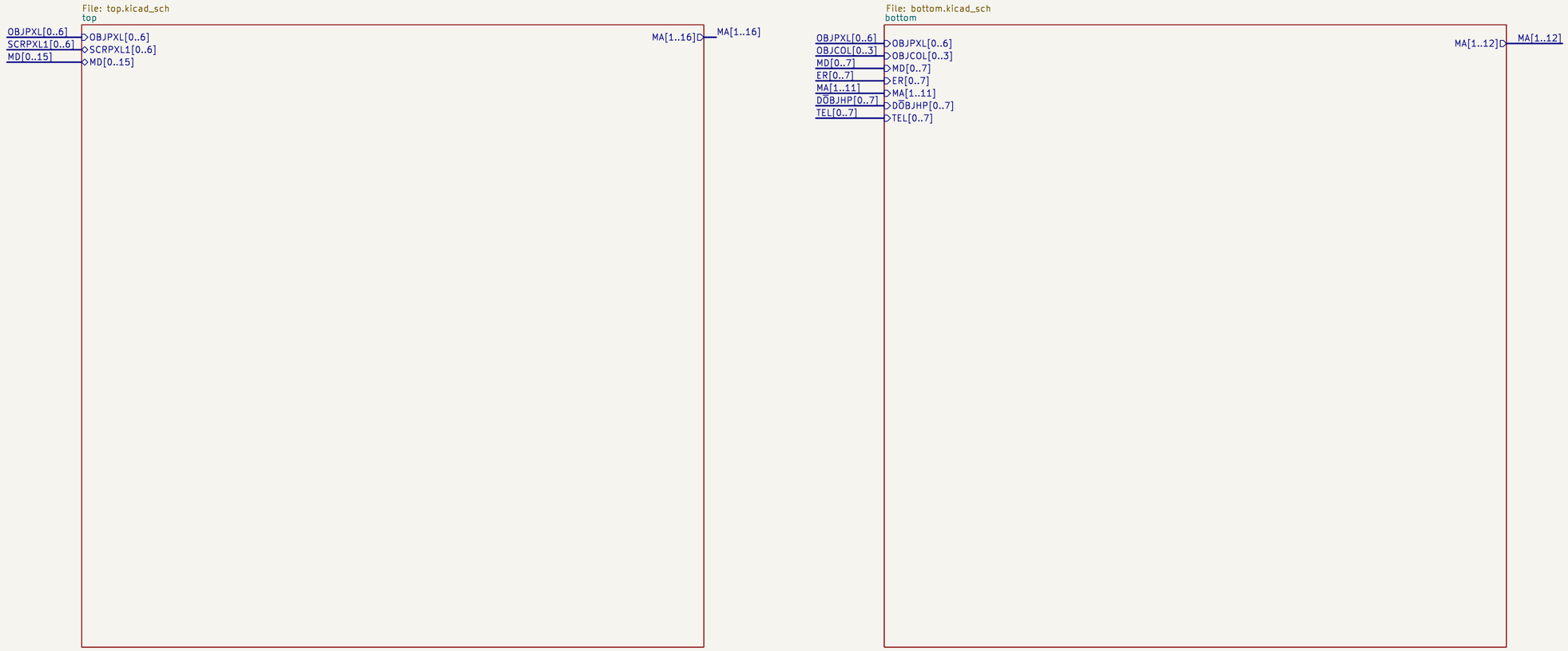

Leo Tejada
JOTEGO

Sheet: /
File: wwfsstar.kicad_sch

Title: WWF Super Stars

Size: A3	Date:	**Rev:**
KiCad E.D.A. 8.0.9		Id: 1/20

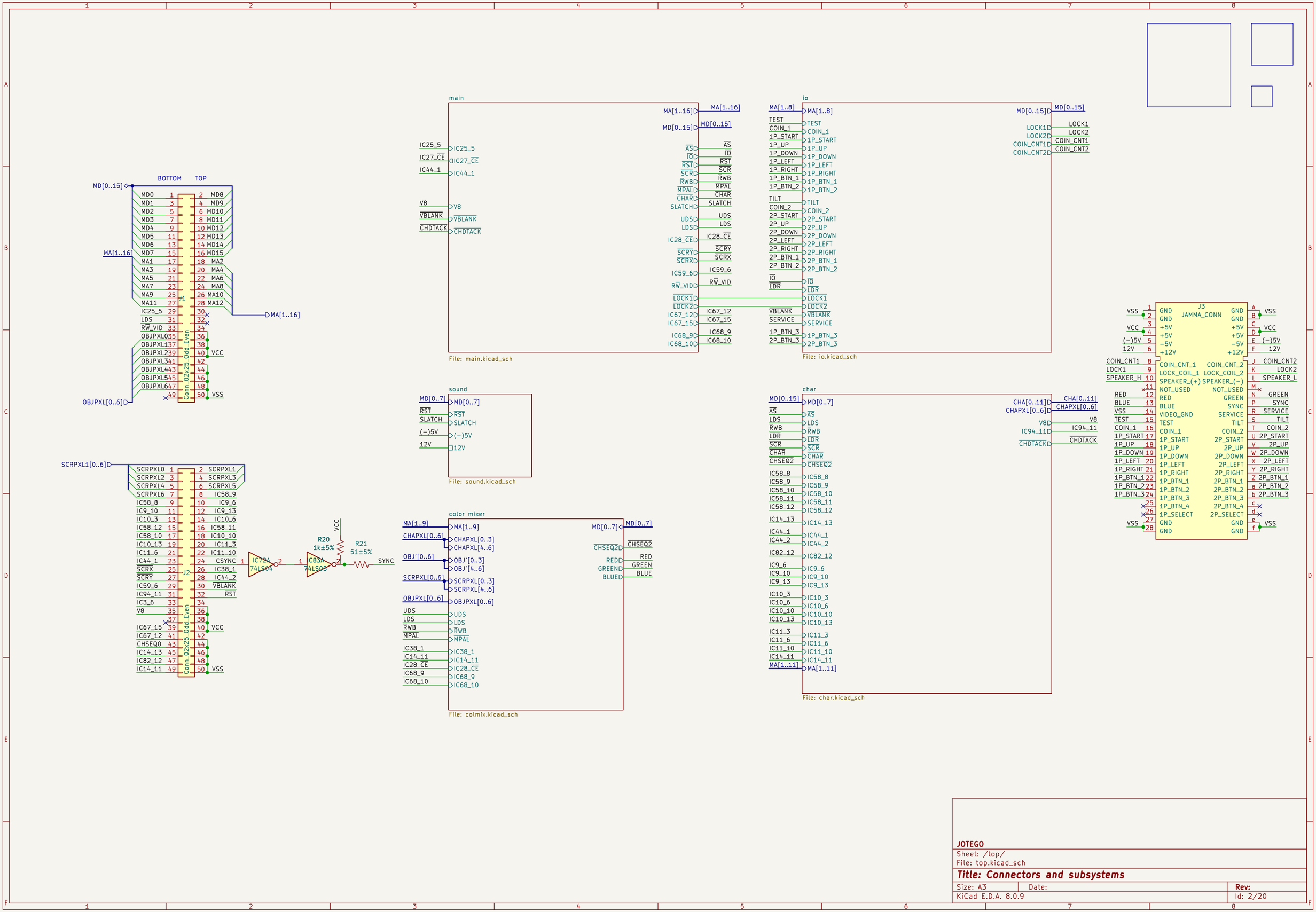
main
File: main.kicad_sch
io
File: io.kicad_sch
sound
File: sound.kicad_sch
char
File: char.kicad_sch
color mixer
File: colmix.kicad_sch
J3
JAMMA_CONN
J2
Conn_02x25_Odd_Even
BOTTOM
TOP
R20
1k±5%
R21
51±5%
IC72A
74LS04
IC83A
74LS05
VCC
SYNC
JOTEGO
Sheet: /top/
File: top.kicad_sch
Title: Connectors and subsystems
Size: A3
Date:
Rev:
KiCad E.D.A. 8.0.9
Id: 2/20

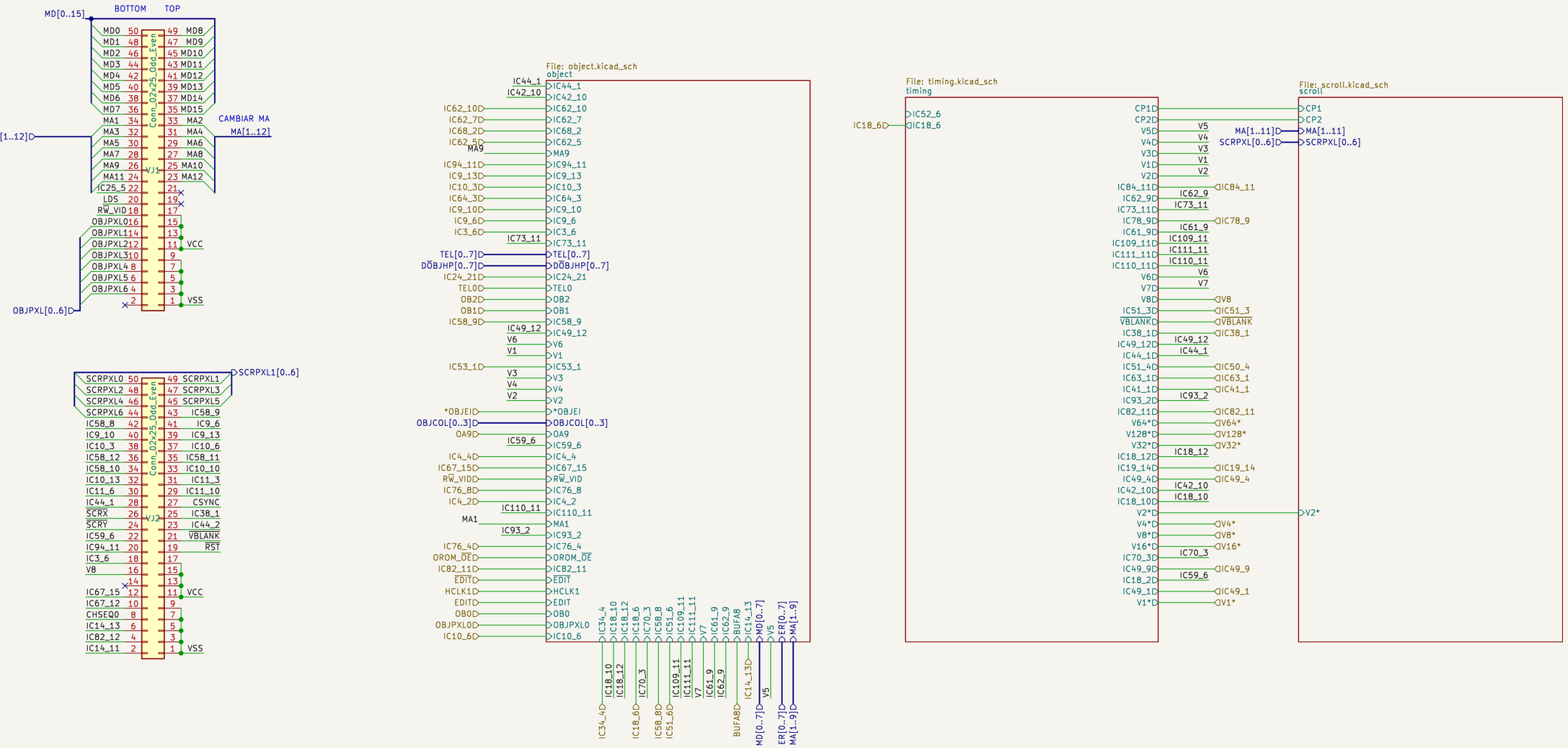

JOTEGO

Sheet: /bottom/
File: bottom.kicad_sch

Title: Bottom board

Size: A3	Date:	Rev:
KiCad E.D.A. 8.0.9		Id: 3/20

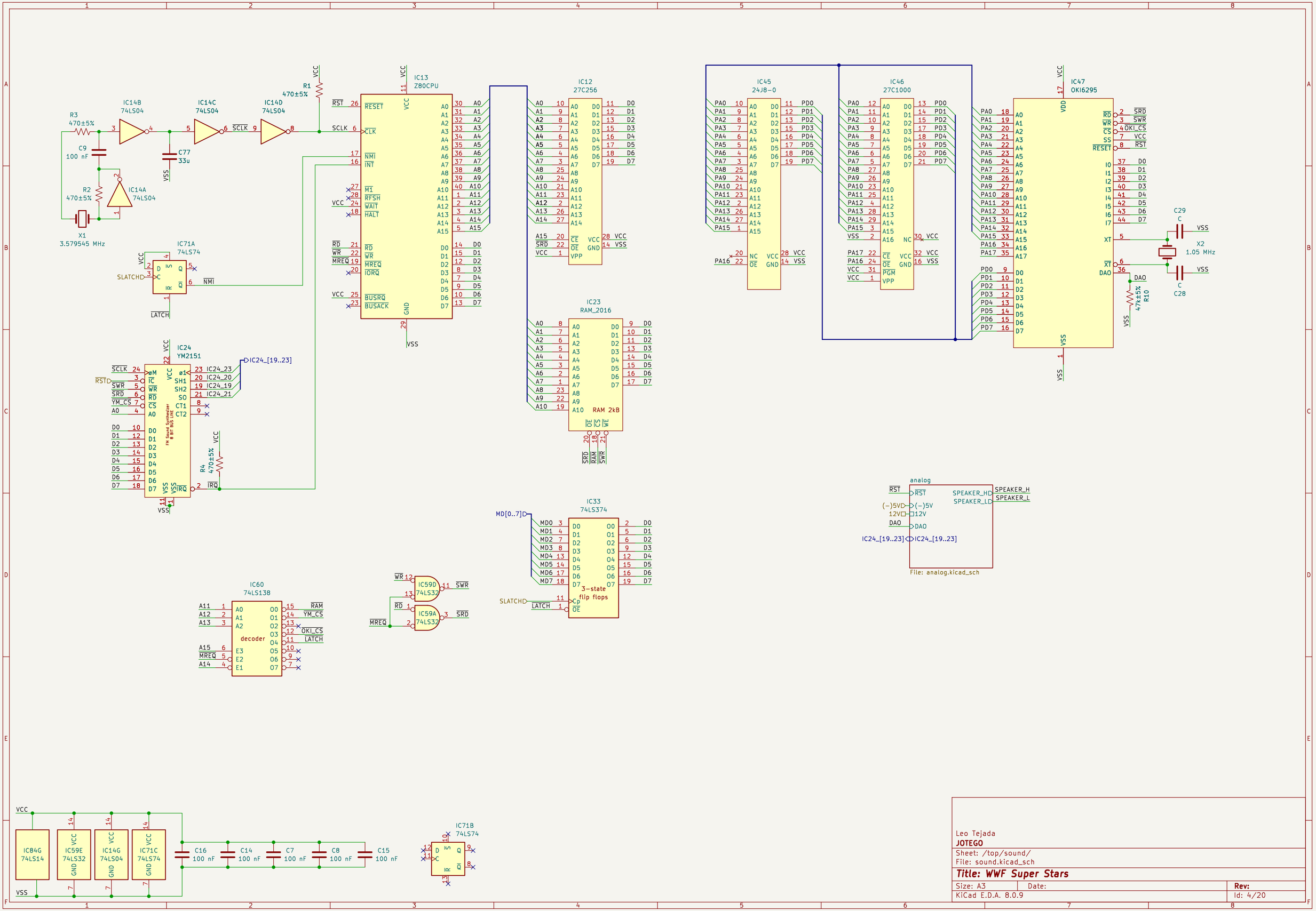
IC13
Z80CPU
IC12
27C256
IC23
RAM_2016
IC45
24J8-0
IC46
27C1000
IC47
OKI6295
IC14B
74LS04
IC14C
74LS04
IC14D
74LS04
IC14A
74LS04
IC71A
74LS74
IC24
YM2151
FM Sound Synthesizer
8 Bit BUS Interface
IC60
74LS138
decoder
IC59D
74LS32
IC59A
74LS32
IC33
74LS374
3-state
flip flops
analog
File: analog.kicad_sch
X1
3.579545 MHz
X2
1.05 MHz
IC84G
74LS14
IC59E
74LS32
IC14G
74LS04
IC71C
74LS74
IC71B
74LS74
Leo Tejada
JOTEGO
Sheet: /top/sound/
File: sound.kicad_sch
Title: WWF Super Stars
Size: A3
Date:
Rev:
KiCad E.D.A. 8.0.9
Id: 4/20

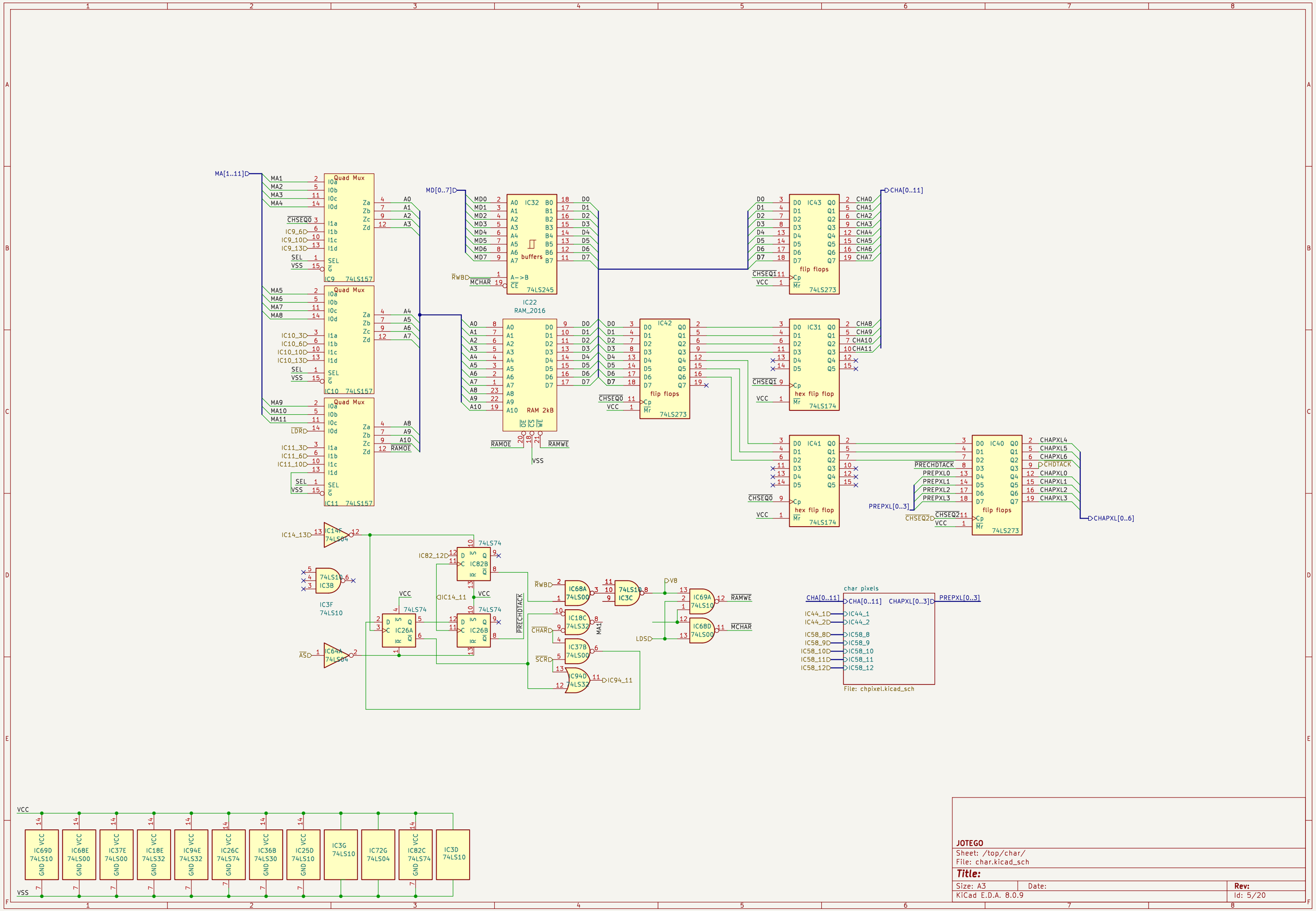
MA[1..11]
Quad Mux
IC9 74LS157
IC10 74LS157
IC11 74LS157
MD[0..7]
IC32
buffers
74LS245
IC22
RAM_2016
RAM 2kB
IC42
flip flops
74LS273
IC43
IC31
hex flip flop
74LS174
IC41
IC40
CHA[0..11]
CHAPXL[0..6]
PREPXL[0..3]
IC14F
74LS04
74LS10
IC3F
74LS10
IC82B
IC26A
IC26B
IC68A
74LS00
IC18C
74LS32
IC37B
74LS00
IC94D
74LS32
IC3C
IC69A
74LS10
IC68D
74LS00
char pixels
File: chpixel.kicad_sch
IC69D
IC68E
IC37E
IC18E
IC94E
IC26C
IC36B
IC25D
IC3G
IC72G
IC82C
IC3D
VCC
VSS
JOTEGO
Sheet: /top/char/
File: char.kicad_sch
Title:
Size: A3
Date:
Rev:
KiCad E.D.A. 8.0.9
Id: 5/20

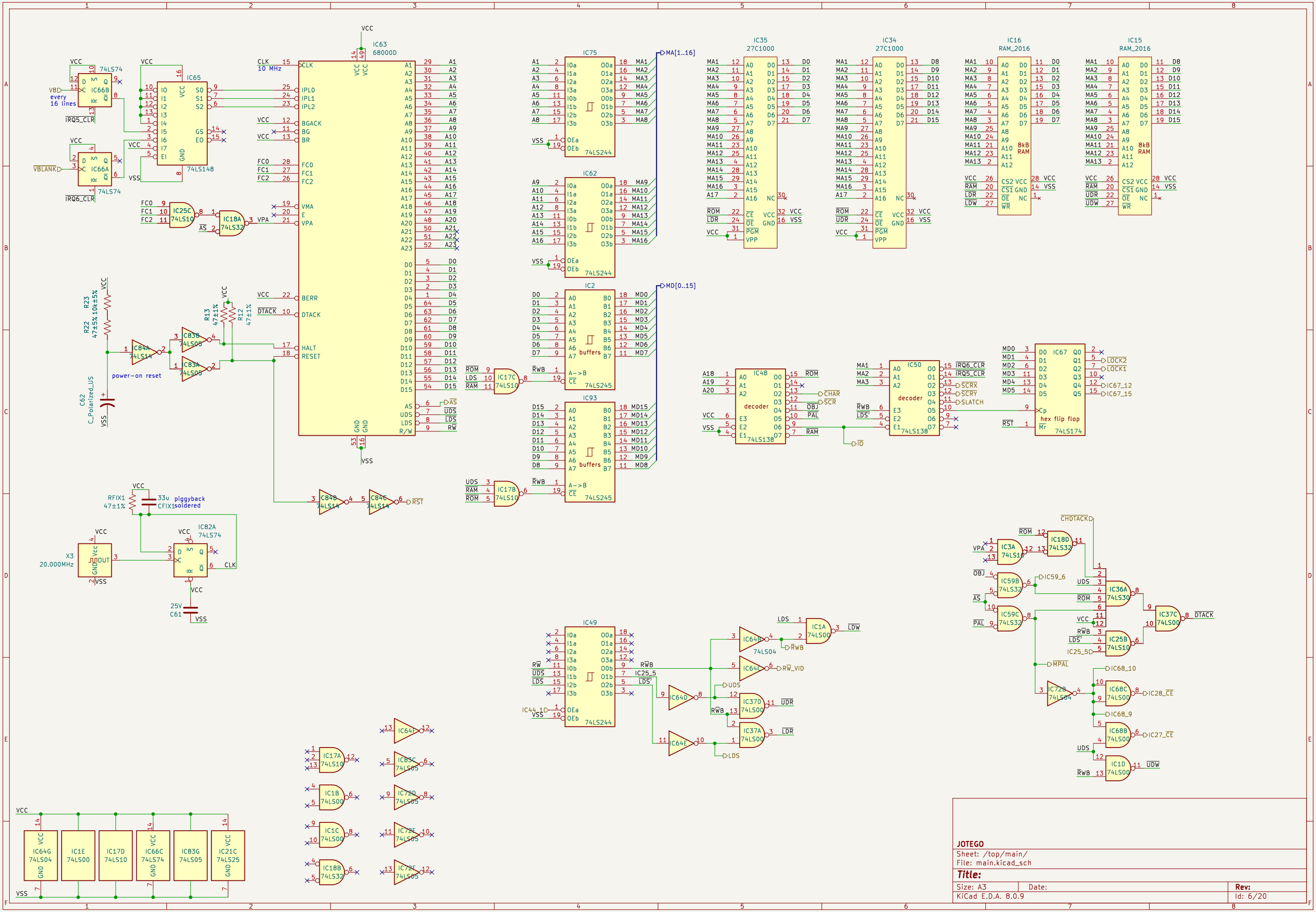
IC63
68000D
CLK
10 MHz
IPL0
IPL1
IPL2
BGACK
BG
BR
FC0
FC1
FC2
VMA
E
VPA
BERR
DTACK
HALT
RESET
AS
UDS
LDS
R/W
IC65
74LS148
IC25C
74LS10
IC18A
74LS32
IC66B
IC66A
74LS74
IRQ5_CLR
IRQ6_CLR
VBLANK
V8D
every
16 lines
R23
47±5% 10k±5%
R22
47±5% 10k±5%
R13
47±1%
R12
47±1%
C84A
74LS14
C83B
74LS05
C83A
74LS05
C62
C_Polarized_US
power-on reset
C84B
74LS14
C84C
74LS14
RST
RFIX1
47±1%
33u
CFIX1
piggyback
soldered
IC82A
74LS74
X3
20.000MHz
25V
C61
IC75
74LS244
IC62
74LS244
IC2
74LS245
IC93
74LS245
buffers
MA[1..16]
MD[0..15]
IC17C
74LS10
IC17B
74LS10
IC35
27C1000
IC34
27C1000
IC16
RAM_2016
IC15
RAM_2016
8kB
RAM
IC48
74LS138
decoder
IC50
74LS138
decoder
IC67
74LS174
hex flip flop
LOCK2
LOCK1
IC67_12
IC67_15
IC49
74LS244
IC64H
74LS04
IC64G
74LS04
IC1A
74LS00
IC64D
IC64E
IC37D
74LS00
IC37A
74LS00
IC64C
IC3A
74LS10
IC18D
74LS32
IC59B
74LS32
IC59C
74LS32
IC36A
74LS30
IC37C
74LS00
IC25B
74LS10
IC72B
74LS04
IC68C
74LS00
IC68B
74LS00
IC1D
74LS00
IC17A
74LS10
IC1B
74LS00
IC1C
74LS00
IC18B
74LS32
IC64F
IC83C
74LS05
IC72D
74LS05
IC72E
74LS05
IC72F
74LS05
IC1E
74LS00
IC17D
74LS10
IC66C
74LS74
IC83G
74LS05
IC21C
74LS25
VCC
VSS
JOTEGO
Sheet: /top/main/
File: main.kicad_sch
Title:
Size: A3
Date:
Rev:
KiCad E.D.A. 8.0.9
Id: 6/20

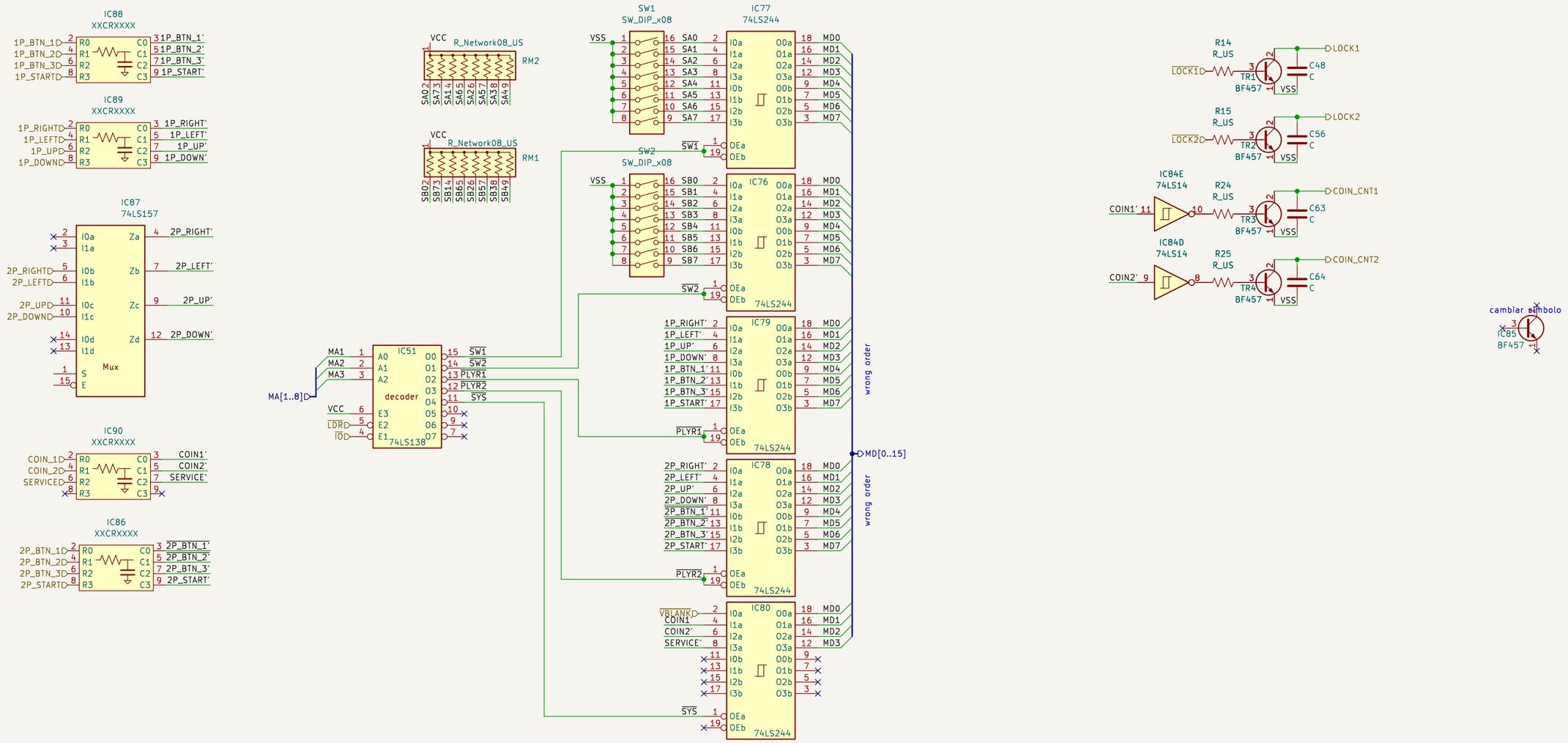

JOTEGO

Sheet: /top/io/

File: io.kicad_sch

Title: CABINET I/O

Size: A3	Date:	Rev:
KiCad E.D.A. 8.0.9		Id: 7/20

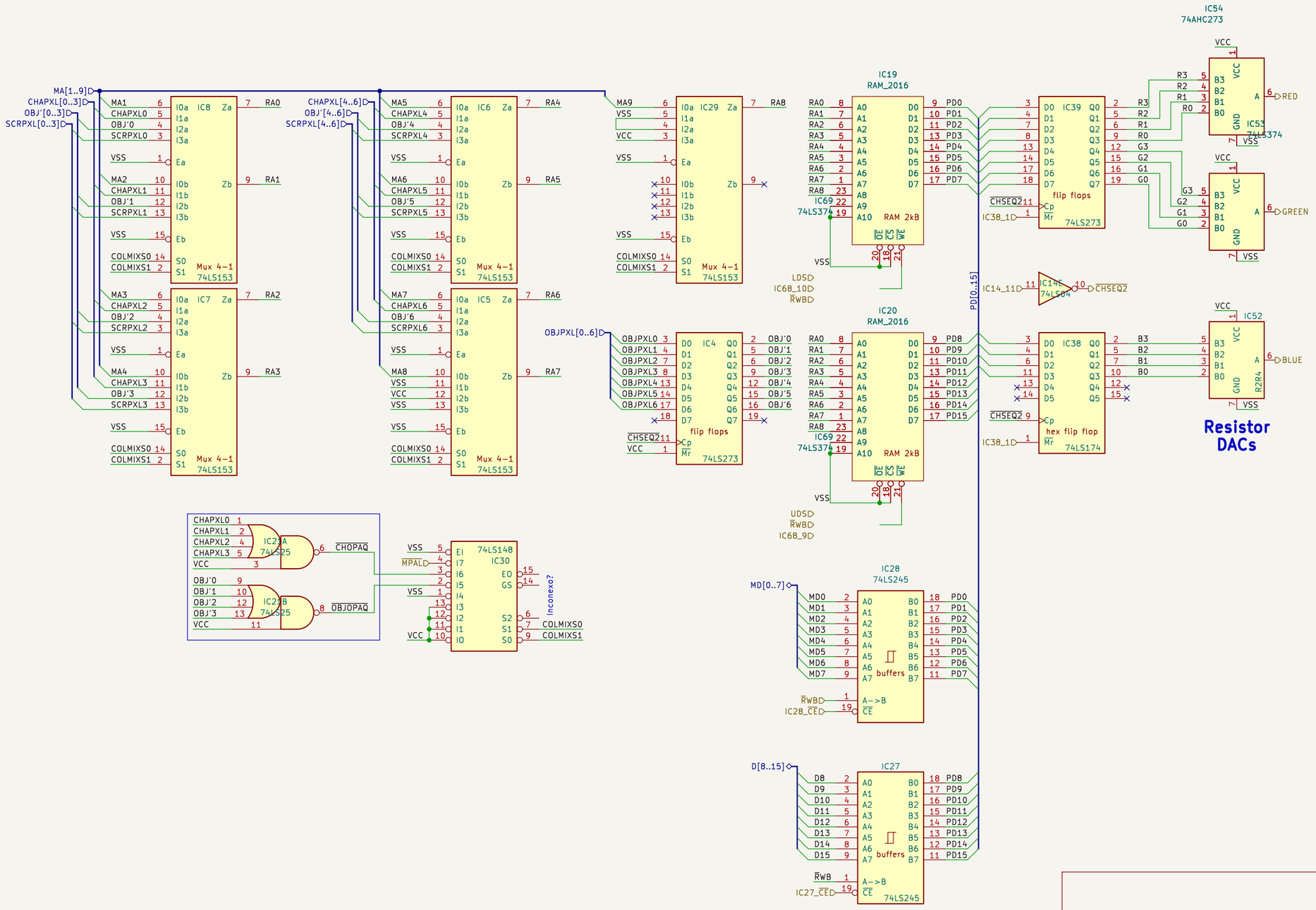

JOTEGO

Sheet: /top/color mixer/

File: colmix.kicad_sch

Title:

Size: A3	Date:	Rev:
KiCad E.D.A. 8.0.9		Id: 8/20

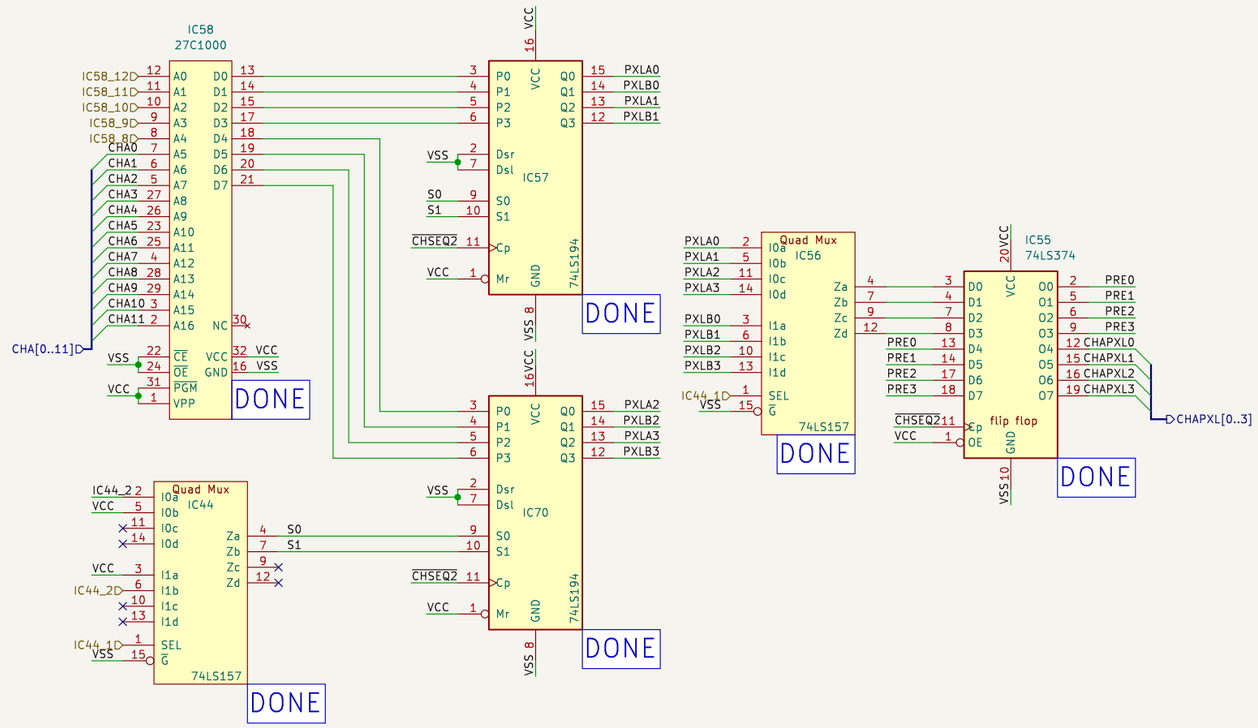

JOTEGO

Sheet: /top/char/char pixels/

File: chpixel.kicad_sch

Title:

Size: A3	Date:	**Rev:**
KiCad E.D.A. 8.0.9		Id: 9/20

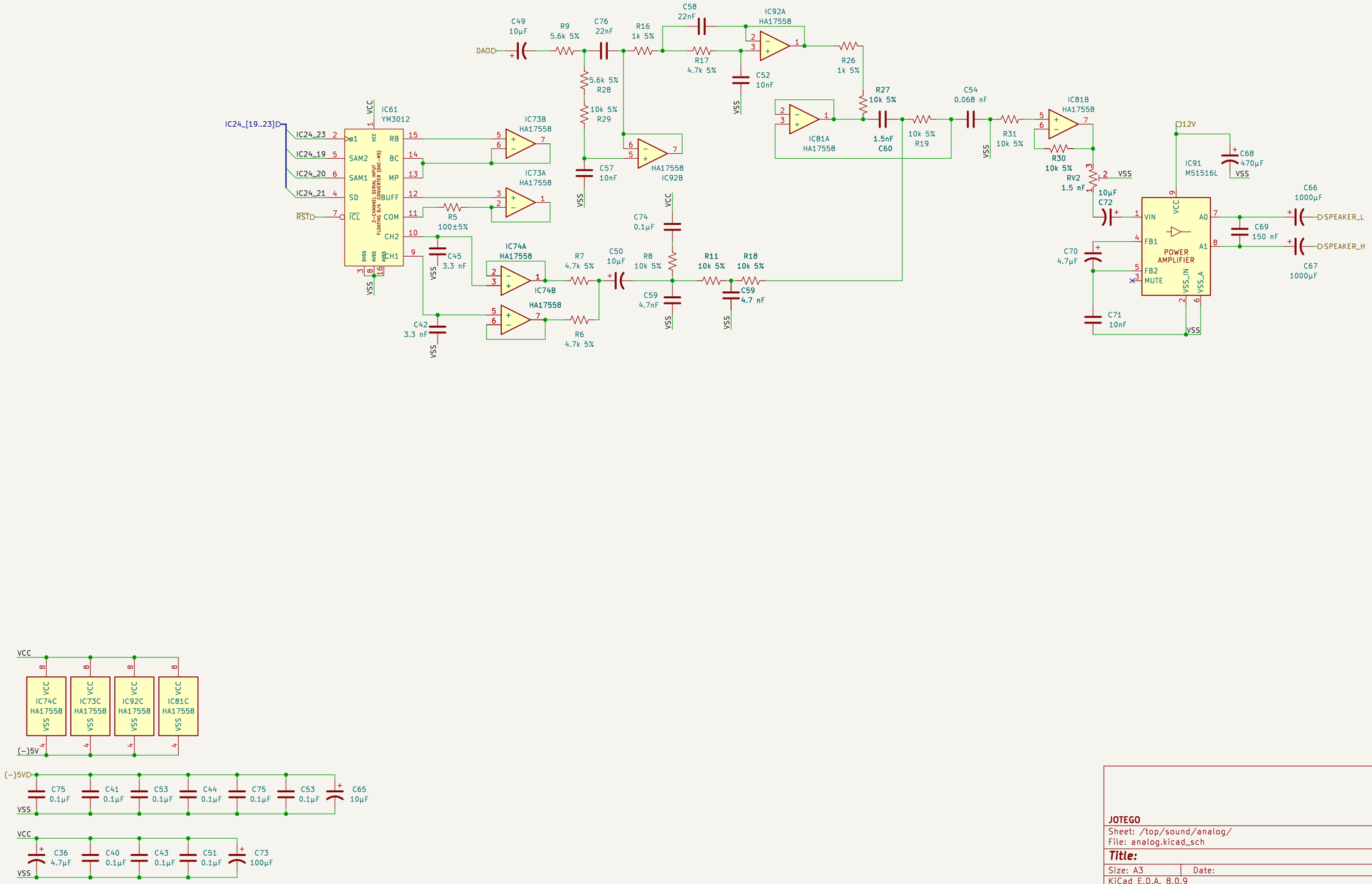

JOTEGO

Sheet: /top/sound/analog/

File: analog.kicad_sch

Title:

Size: A3	Date:	Rev:
KiCad E.D.A. 8.0.9		Id: 10/20

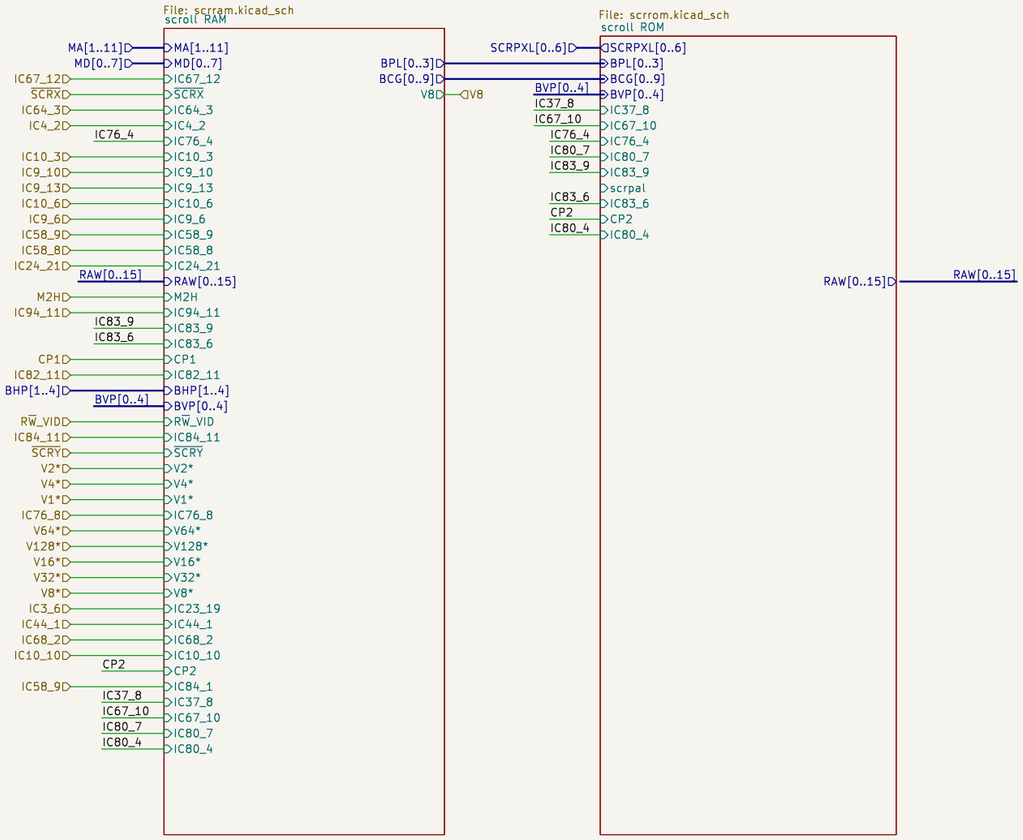

JOTEGO

Sheet: /bottom/scroll/
File: scroll.kicad_sch

Title:

Size: A3	Date:	Rev:
KiCad E.D.A. 8.0.9		Id: 12/20

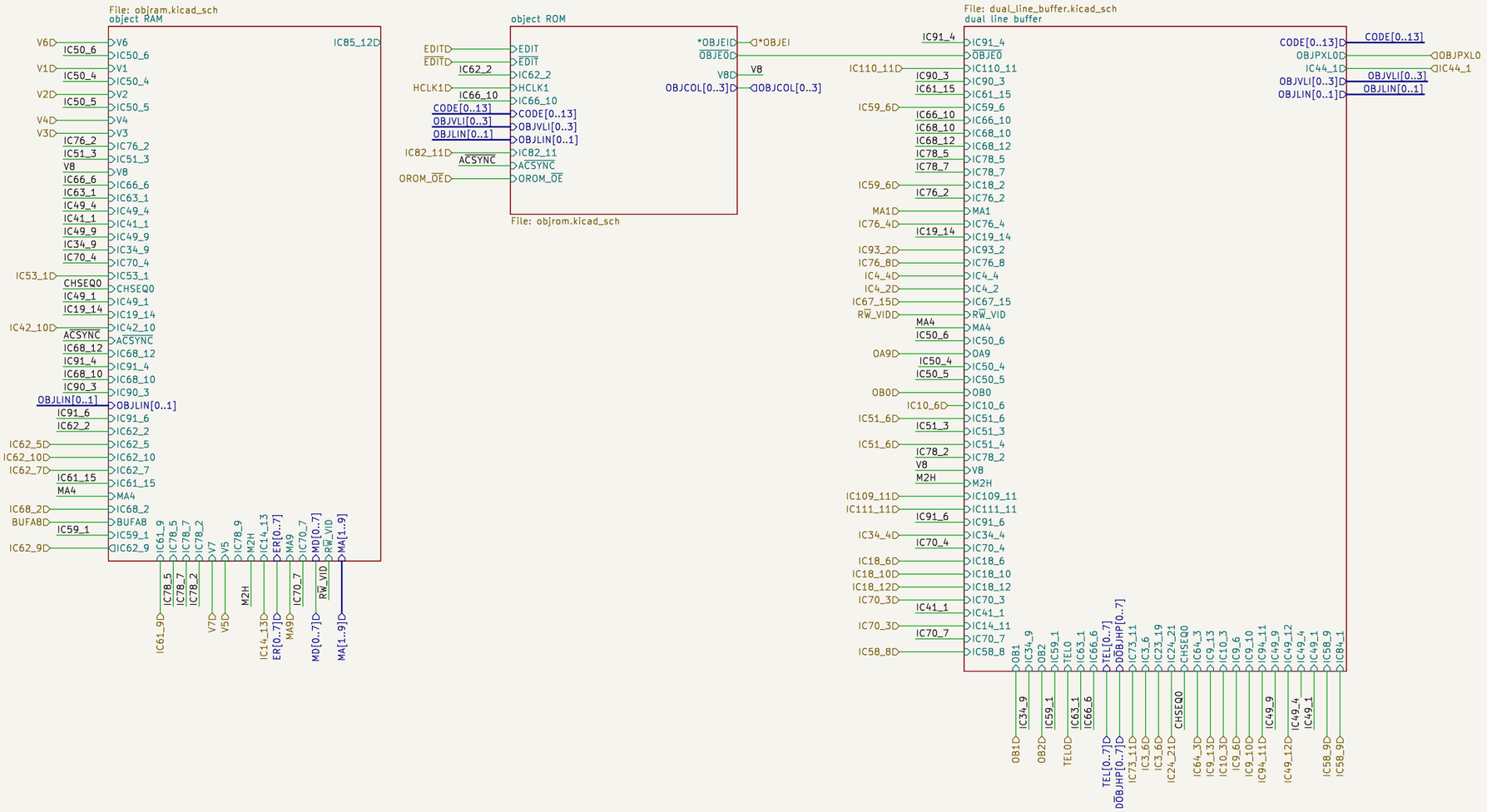

JOTEGO

Sheet: /bottom/object/
File: object.kicad_sch

Title: Objects

Size: A3	Date:	Rev:
KiCad E.D.A. 8.0.9		Id: 13/20

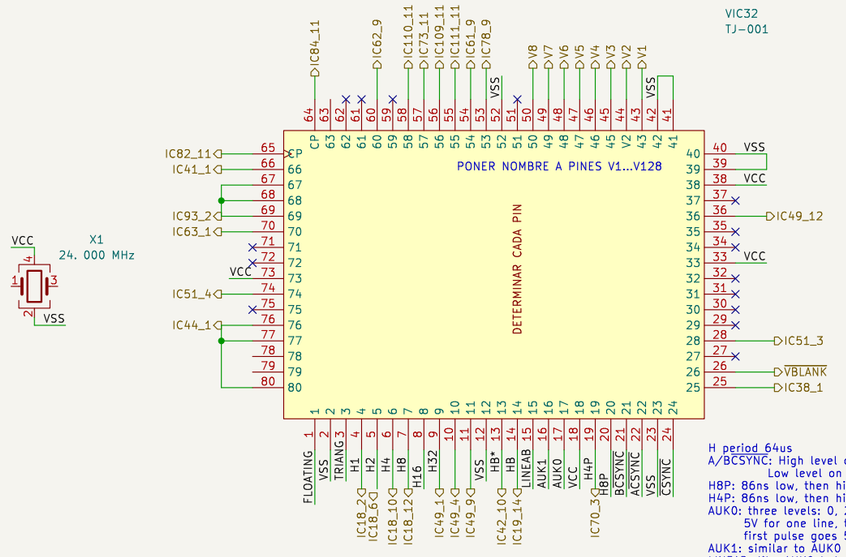

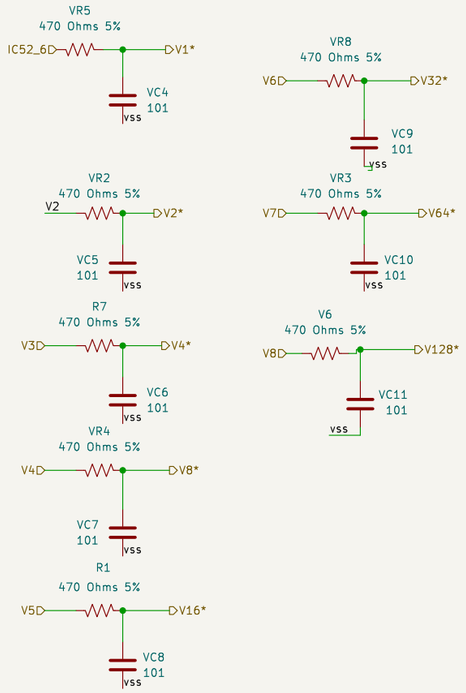

H period 64us
A/BCSYNC: High level on visible area 5V, during VBLANK -2V
Low level on visible area -2V, during VBLANK 0V
H8P: 86ns low, then high. Period 668ns
H4P: 86ns low, then high. Period 332ns
AUK0: three levels: 0, 2 and 5V. subperiod 2.66us. period 128us
5V for one line, then pulses down during the next line. The first pulse goes 5->0V, the rest 5->2V
AUK1: similar to AUK0
LINEAB: like AUK0 but purely digital (0/5V)
HB: 64us period, 21.4us high

TRIANG: triangular waveform at 12MHz
H1: 6MHz
H2: 3MHz
H4: 1.5MHz
H8: 750Hz
H16: 375Hz
H32: 187Hz
H64: 93Hz
H128: 47Hz

JOTEGO

Sheet: /bottom/timing/
File: timing.kicad_sch

Title:

Size: A3	Date:	Rev:
KiCad E.D.A. 8.0.9		Id: 13/20

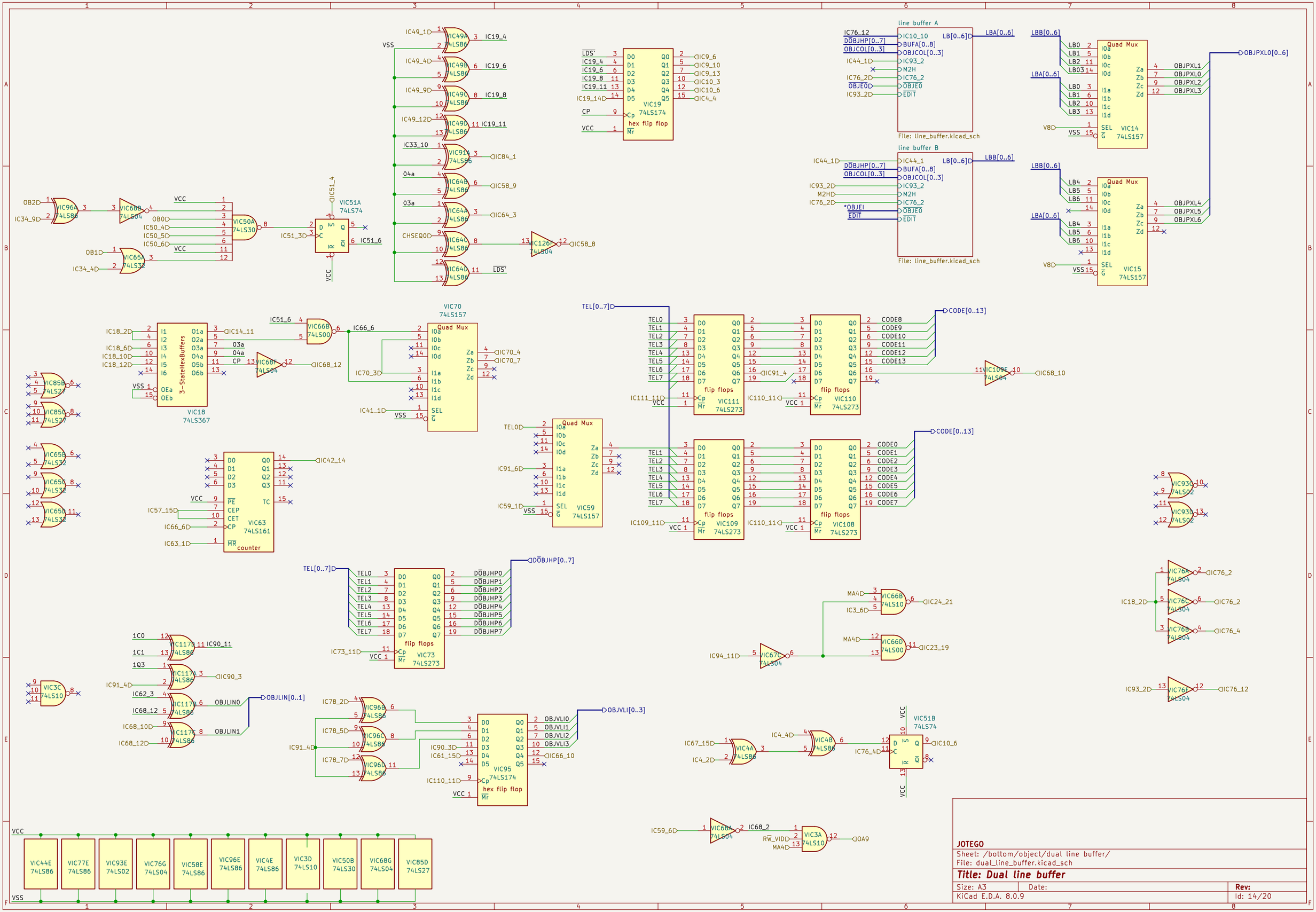
line buffer A
File: line_buffer.kicad_sch
line buffer B
File: line_buffer.kicad_sch
Quad Mux
VIC14
74LS157
VIC15
74LS157
OBJPXL0[0..6]
OBJPXL1
OBJPXL0
OBJPXL2
OBJPXL3
OBJPXL4
OBJPXL5
OBJPXL6
VIC51A
74LS74
VIC19
74LS174
hex flip flop
VIC50A
74LS30
VIC64A
74LS86
VIC64B
74LS86
VIC64C
74LS86
VIC64D
74LS86
VIC49A
74LS86
VIC49B
74LS86
VIC49C
74LS86
VIC49D
74LS86
VIC91A
74LS86
VIC96A
74LS86
VIC68B
74LS04
VIC65A
74LS32
VIC126F
74LS04
VIC18
74LS367
3-StateHexBuffers
VIC70
74LS157
VIC66B
74LS00
VIC68F
74LS04
VIC85B
74LS27
VIC85C
74LS27
VIC65B
74LS32
VIC65C
74LS32
VIC65D
74LS32
VIC63
74LS161
counter
VIC59
74LS157
VIC111
74LS273
VIC110
74LS273
VIC109
74LS273
VIC108
74LS273
flip flops
VIC109E
74LS04
VIC93C
74LS02
VIC93D
74LS02
VIC76A
74LS04
VIC76C
74LS04
VIC76B
74LS04
VIC76E
74LS04
VIC66B
74LS10
VIC66D
74LS00
VIC67C
74LS04
VIC3C
74LS10
VIC117B
74LS86
VIC117A
74LS86
VIC117E
74LS86
VIC117F
74LS86
OBJLIN[0..1]
OBJLIN0
OBJLIN1
VIC96B
74LS86
VIC96C
74LS86
VIC96D
74LS86
VIC95
74LS174
hex flip flop
OBJVLI[0..3]
OBJVLI0
OBJVLI1
OBJVLI2
OBJVLI3
VIC4A
74LS86
VIC4B
74LS86
VIC51B
74LS74
VIC68A
74LS04
VIC3A
74LS10
VCC
VSS
VIC44E 74LS86
VIC77E 74LS86
VIC93E 74LS02
VIC76G 74LS04
VIC58E 74LS86
VIC96E 74LS86
VIC4E 74LS86
VIC3D 74LS10
VIC50B 74LS30
VIC68G 74LS04
VIC85D 74LS27
JOTEGO
Sheet: /bottom/object/dual line buffer/
File: dual_line_buffer.kicad_sch
Title: Dual line buffer
Size: A3
Date:
Rev:
KiCad E.D.A. 8.0.9
Id: 14/20

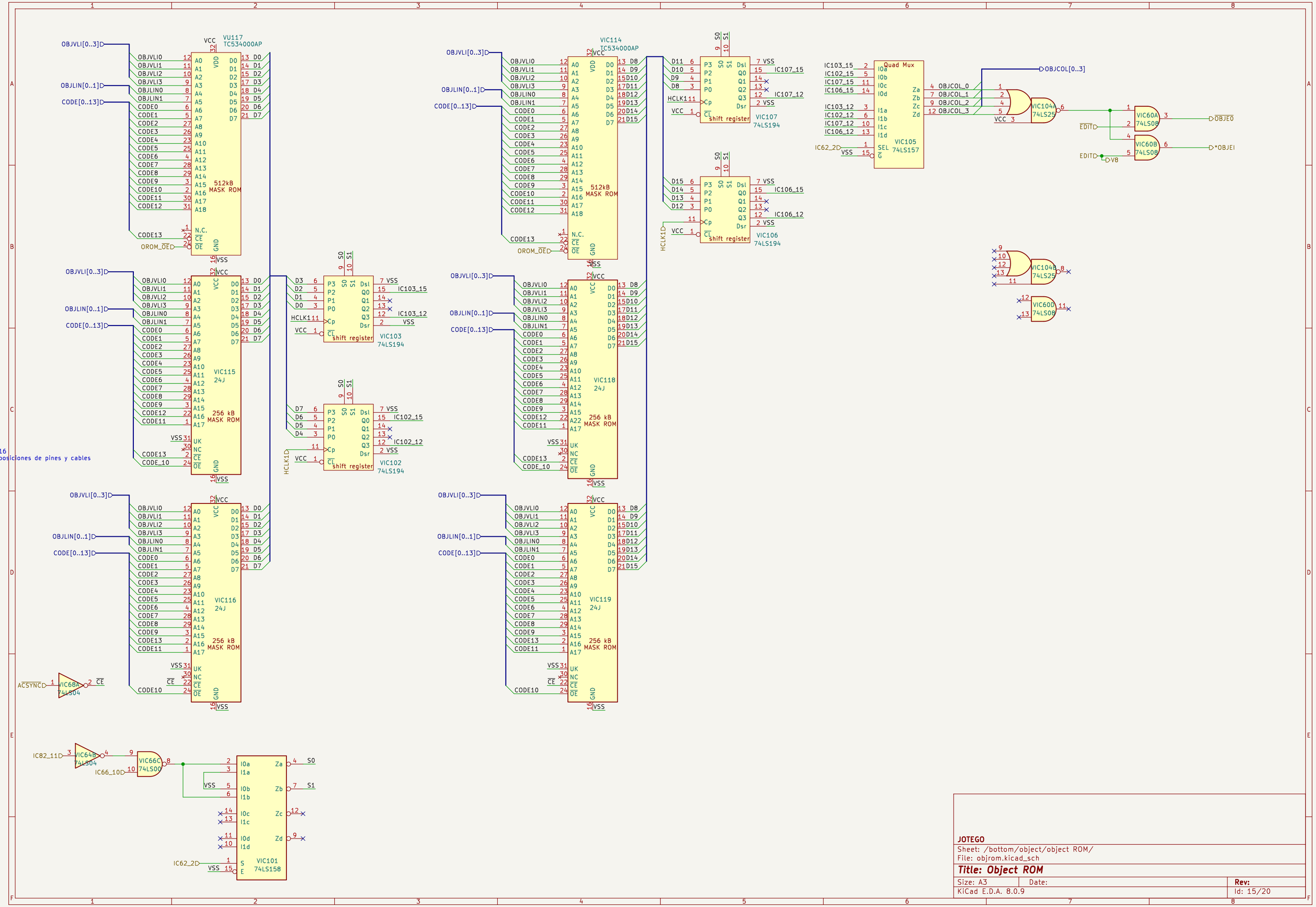

JOTEGO

Sheet: /bottom/object/object ROM/

File: objrom.kicad_sch

Title: Object ROM

Size: A3	Date:	Rev:
KiCad E.D.A. 8.0.9		Id: 15/20

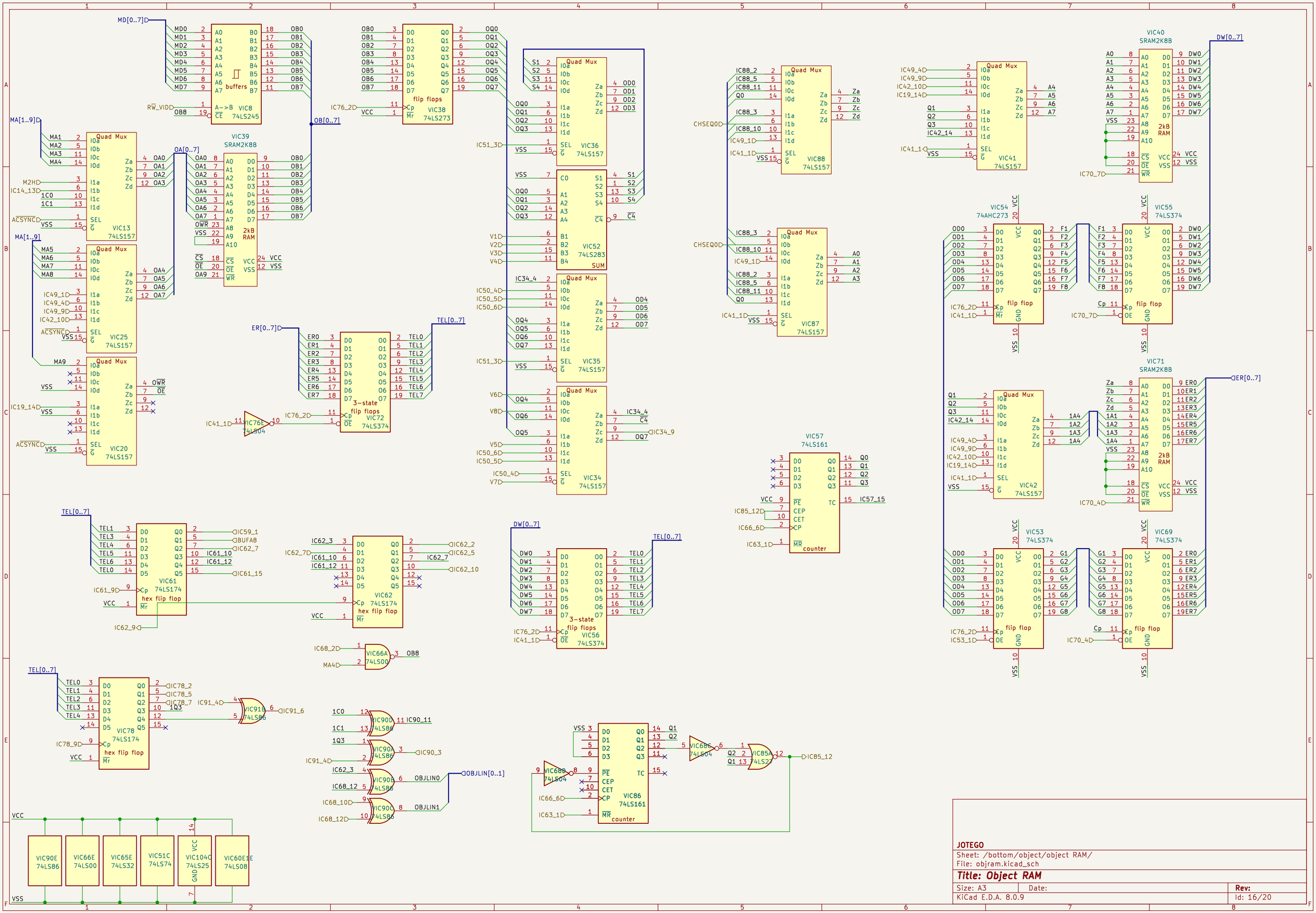
VIC8 74LS245 buffers
VIC39 SRAM2K8B
VIC38 74LS273 flip flops
VIC36 74LS157 Quad Mux
VIC52 74LS283 SUM
VIC35 74LS157 Quad Mux
VIC34 74LS157 Quad Mux
VIC13 74LS157 Quad Mux
VIC25 74LS157 Quad Mux
VIC20 74LS157 Quad Mux
VIC72 74LS374 3-state flip flops
VIC76E 74LS04
VIC88 74LS157 Quad Mux
VIC87 74LS157 Quad Mux
VIC41 74LS157 Quad Mux
VIC40 SRAM2K8B
VIC54 74AHC273 flip flop
VIC55 74LS374 flip flop
VIC42 74LS157 Quad Mux
VIC71 SRAM2K8B
VIC57 74LS161 counter
VIC61 74LS174 hex flip flop
VIC62 74LS174 hex flip flop
VIC56 74LS374 3-state flip flops
VIC66A 74LS00
VIC78 74LS174 hex flip flop
VIC91B 74LS86
VIC90D 74LS86
VIC90A 74LS86
VIC90B 74LS86
VIC90C 74LS86
VIC68B 74LS04
VIC68A 74LS04
VIC85A 74LS27
VIC86 74LS161 counter
VIC53 74LS374 flip flop
VIC69 74LS374 flip flop
VIC90E 74LS86
VIC66E 74LS00
VIC65E 74LS32
VIC51C 74LS74
VIC104C 74LS25
VIC60E1E 74LS08
JOTEGO
Sheet: /bottom/object/object RAM/
File: objram.kicad_sch
Title: Object RAM
Size: A3
Date:
Rev:
KiCad E.D.A. 8.0.9
Id: 16/20

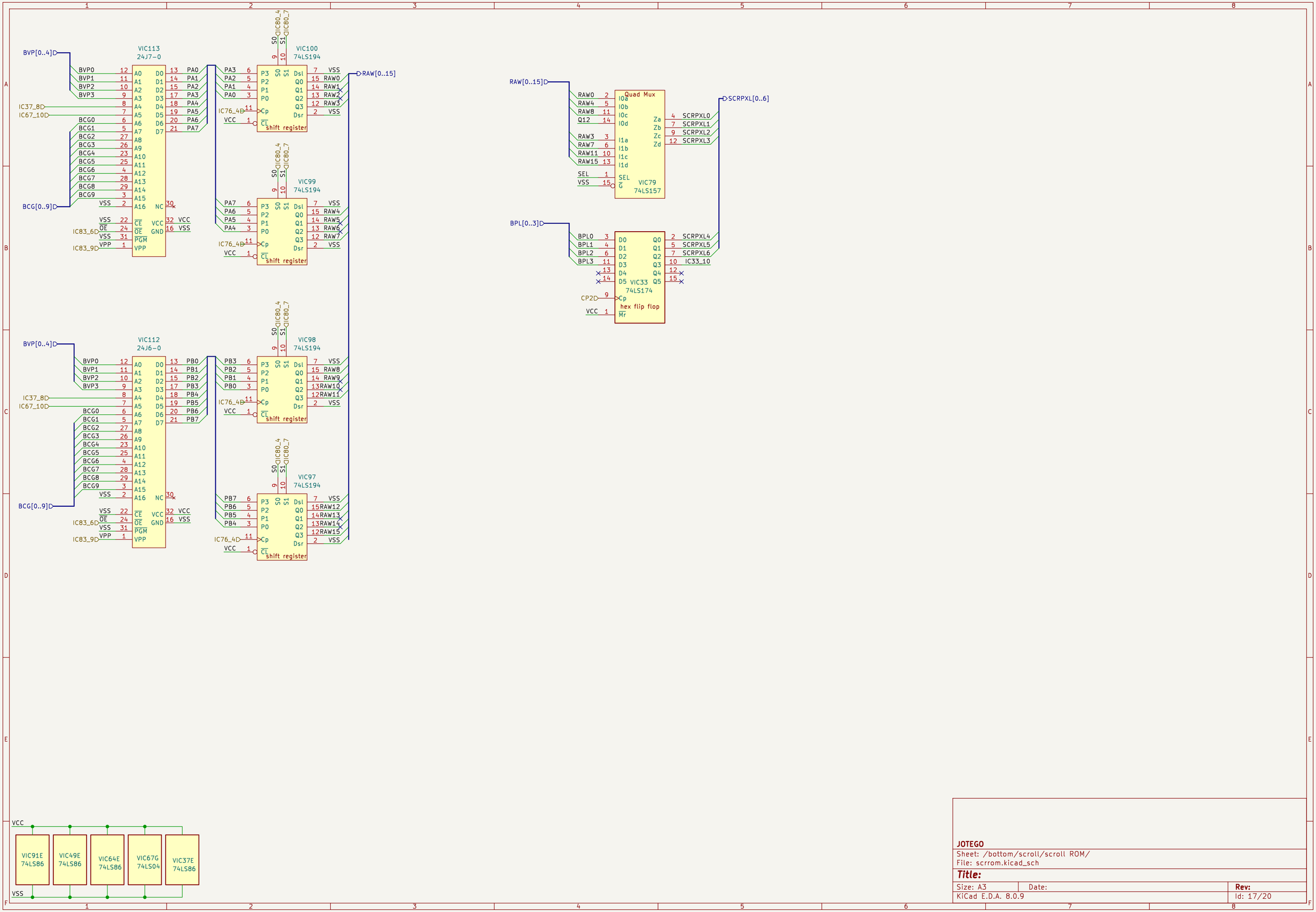

JOTEGO

Sheet: /bottom/scroll/scroll ROM/

File: scrrom.kicad_sch

Title:

Size: A3	Date:	Rev:
KiCad E.D.A. 8.0.9		Id: 17/20

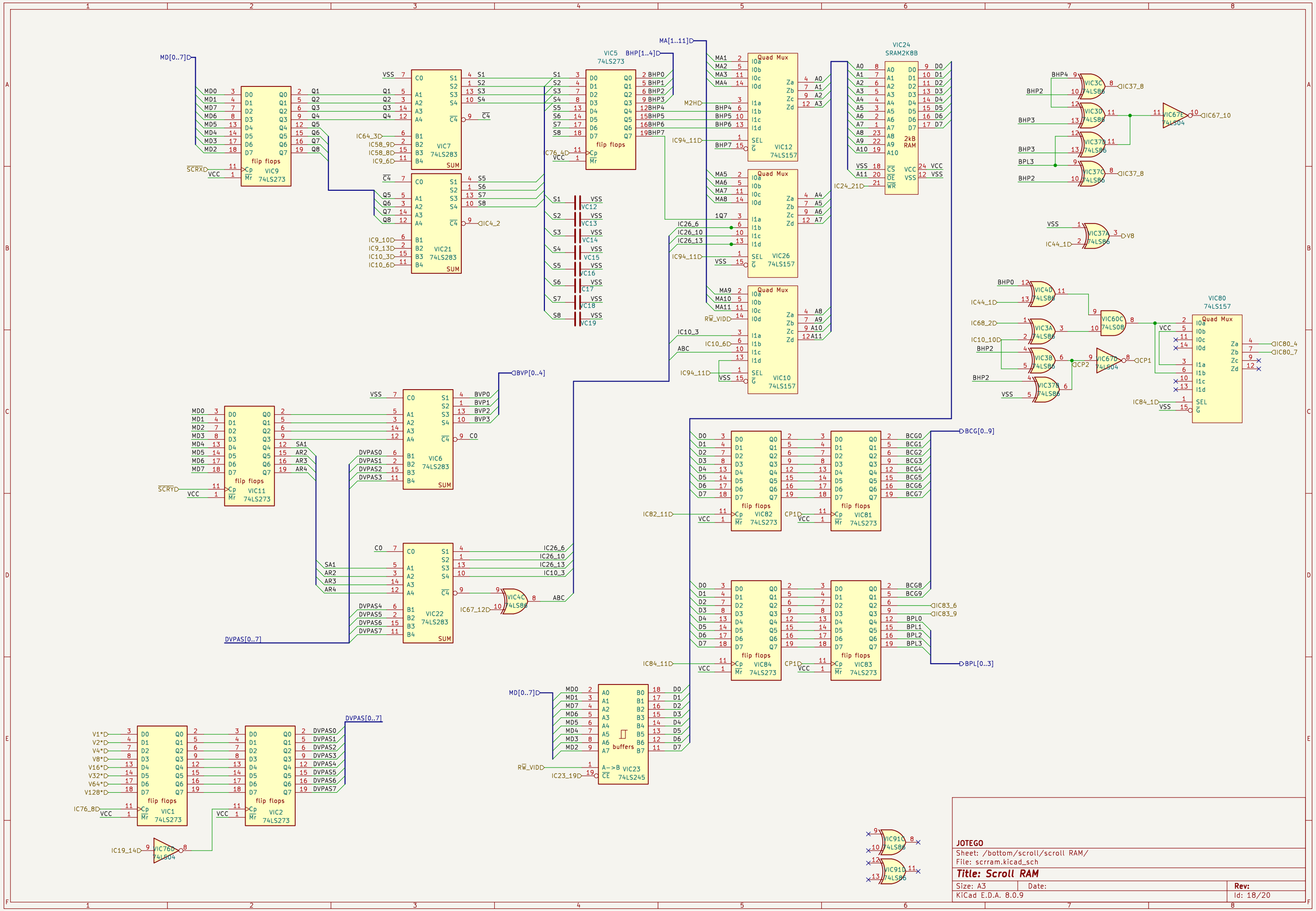
MD[0..7]
SCRXD
VIC9 74LS273
VIC7 74LS283
VIC21 74LS283
VIC5 74LS273
BHP[1..4]
MA[1..11]
Quad Mux
VIC12 74LS157
VIC26 74LS157
VIC10 74LS157
VIC24 SRAM2K8B
2kB RAM
VIC37C 74LS86
VIC37D 74LS86
VIC67E 74LS04
VIC37A 74LS86
VIC40 74LS86
VIC3A 74LS86
VIC3B 74LS86
VIC37B 74LS86
VIC60C 74LS08
VIC67D 74LS04
VIC80 74LS157
SCRY
VIC11 74LS273
VIC6 74LS283
VIC22 74LS283
BVP[0..4]
DVPAS[0..7]
VIC4C 74LS86
VIC82 74LS273
VIC81 74LS273
VIC84 74LS273
VIC83 74LS273
BCG[0..9]
BPL[0..3]
buffers
VIC23 74LS245
VIC1 74LS273
VIC2 74LS273
VIC76D 74LS04
VIC91D 74LS86
VIC91C 74LS86
JOTEGO
Sheet: /bottom/scroll/scroll RAM/
File: scram.kicad_sch
Title: Scroll RAM
Size: A3
Date:
Rev:
KiCad E.D.A. 8.0.9
Id: 18/20

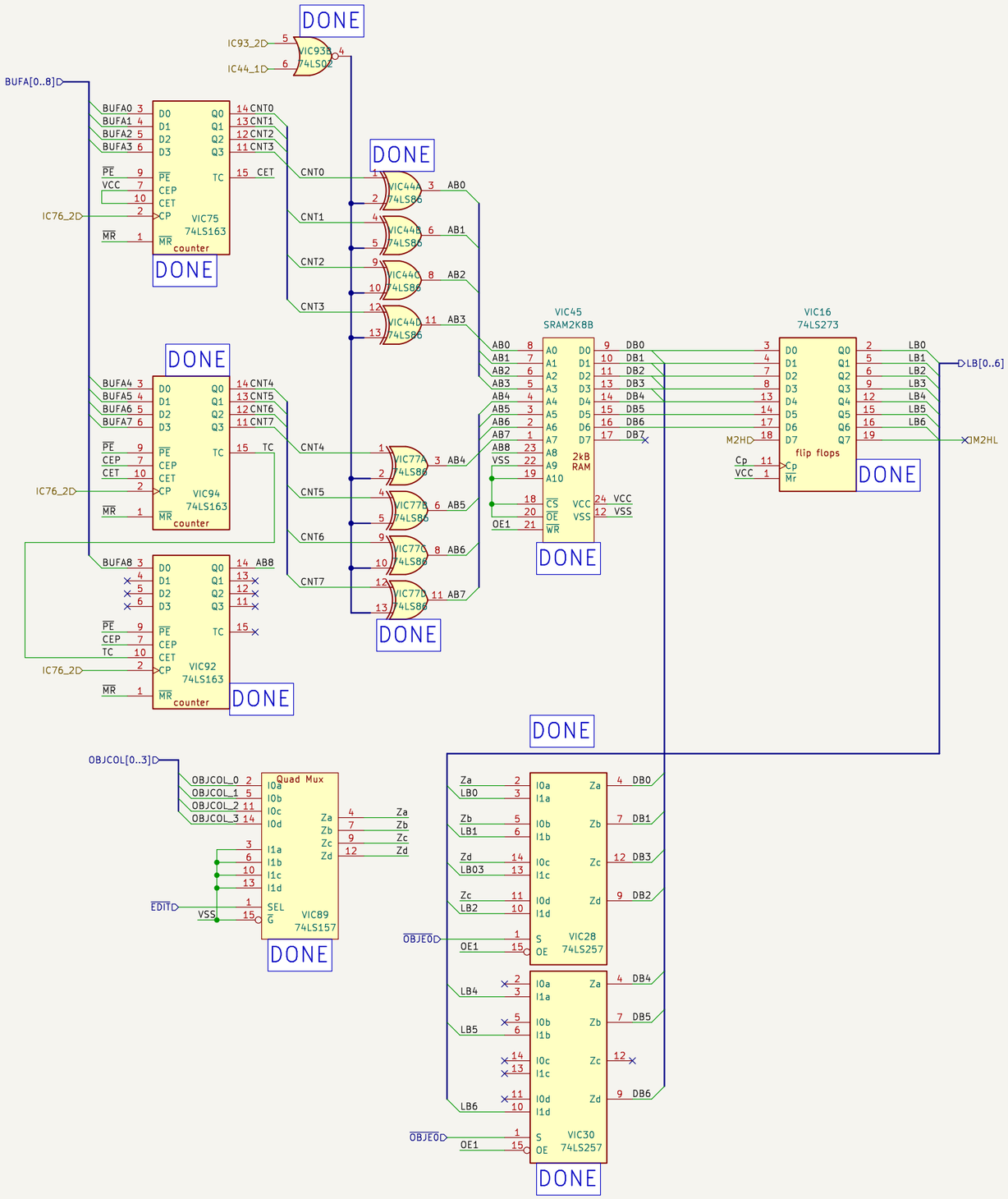

Sheet: /bottom/object/dual line buffer/line buffer A/
File: line_buffer.kicad_sch

Title: Line Buffer

Size: A3	Date:	Rev:
KiCad E.D.A. 8.0.9		Id: 20/20

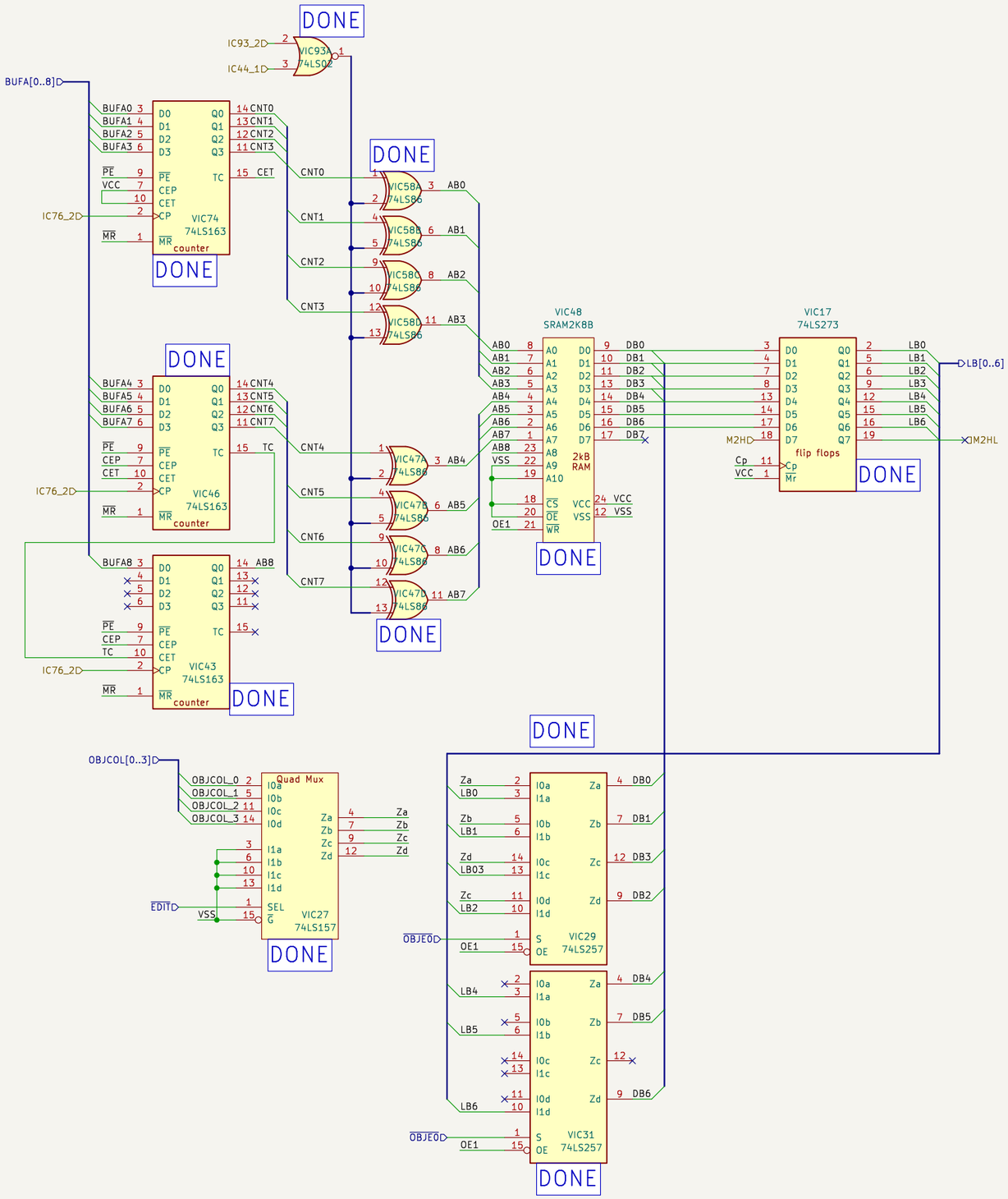

Sheet: /bottom/object/dual line buffer/line buffer B/
File: line_buffer.kicad_sch

Title: Line Buffer

Size: A3	Date:	Rev:
KiCad E.D.A. 8.0.9		Id: 21/20