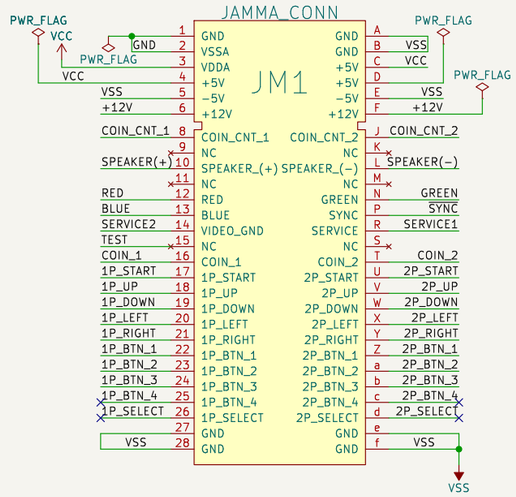

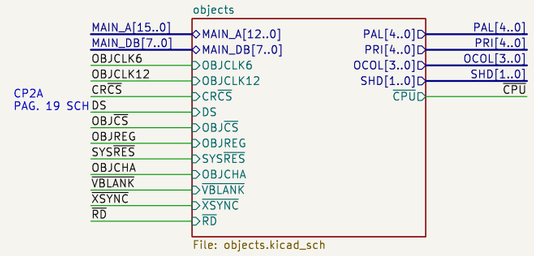

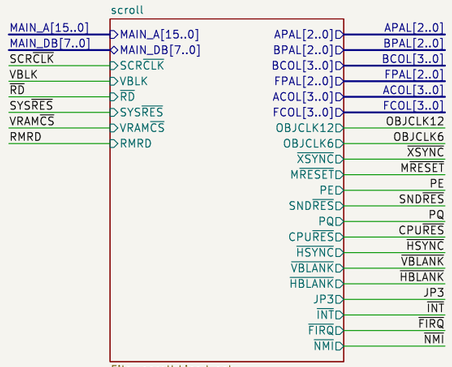

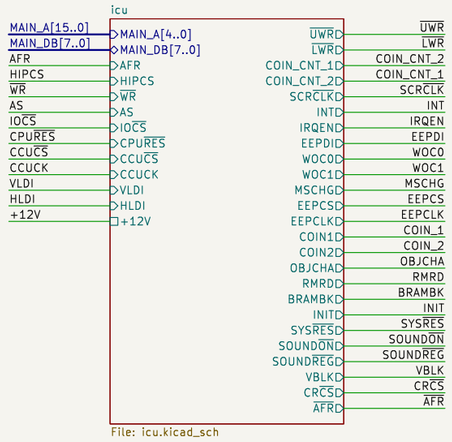

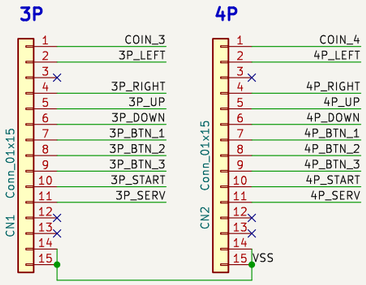

These schematics cover the missing pages in the original ones published by the maker. Signal names existing in the original pages have been preserved. New signal names try to follow the maker style or are taken from similar schematics of the same maker.

www.patreon.com/jotego
github.com/jotego/jtcores/tree/master/cores/simson/sch/vendetta
JOTEGO
KONAMI PWB352292A

Sheet: /
File: vendetta.kicad_sch

Title: Vendetta

Size: A3	Date: 2023-08-09	**Rev: José Tejada G.**
KiCad E.D.A. 8.0.9		Id: 1/4

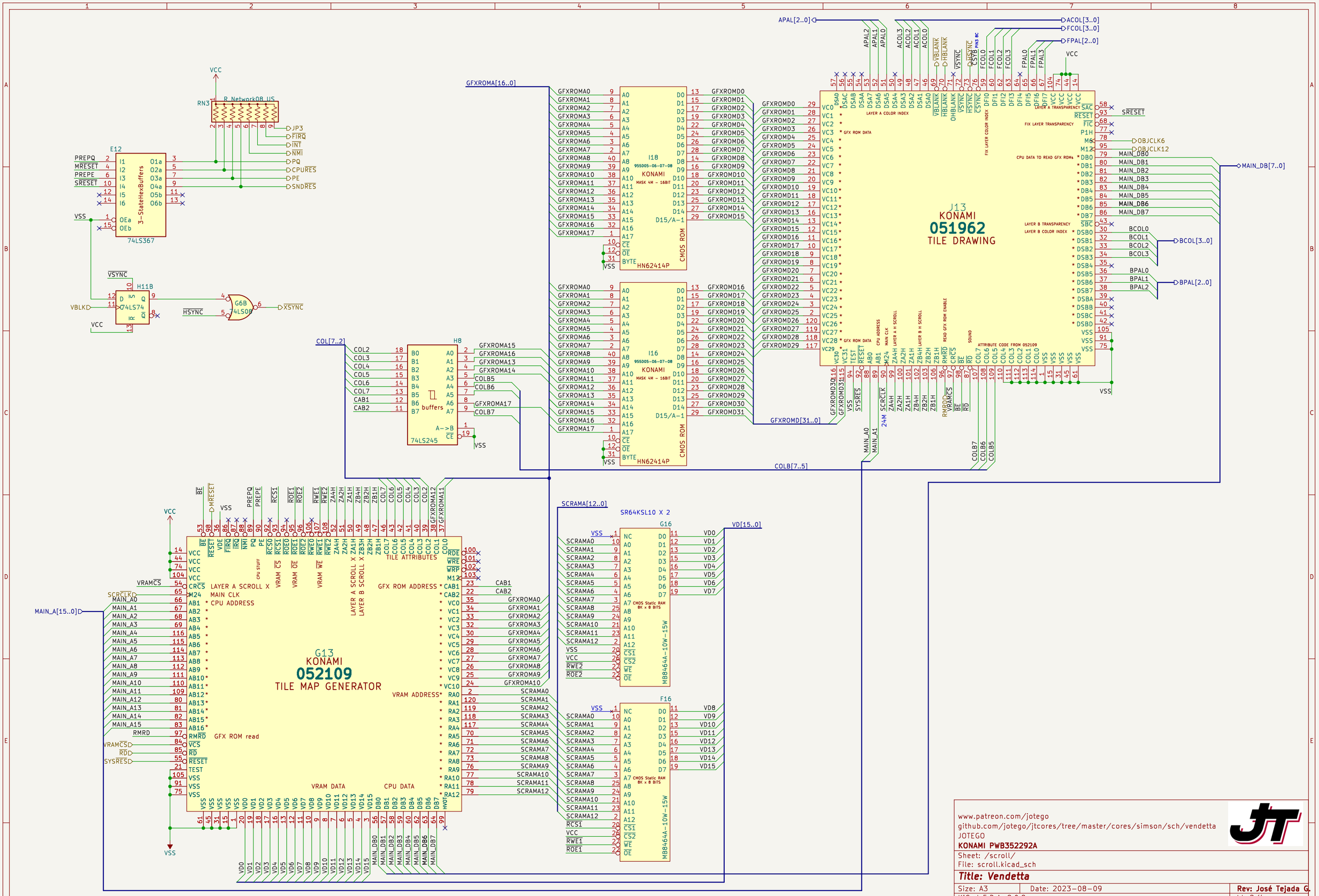
E12
74LS367
3-StateHexBuffers
RN3
R_Network08_US
H11B
74LS74
G6B
74LS08
H8
74LS245
buffers
I18
I16
955D05-06-07-08
KONAMI
MASK 4M - 16BIT
HN62414P
CMOS ROM
J13
KONAMI
051962
TILE DRAWING
LAYER A COLOR INDEX
GFX ROM DATA
LAYER A TRANSPARENCY
FIX LAYER TRANSPARENCY
FIX LAYER COLOR INDEX
CPU DATA TO READ GFX ROMs
LAYER B TRANSPARENCY
LAYER B COLOR INDEX
ATTRIBUTE CODE FROM 052109
CPU ADDRESS
MAIN CLK
LAYER A H SCROLL
LAYER B H SCROLL
READ GFX ROM ENABLE
SOUND
G13
KONAMI
052109
TILE MAP GENERATOR
LAYER A SCROLL X
LAYER A SCROLL X ZA1H
LAYER B SCROLL X ZB3H
TILE ATTRIBUTES
GFX ROM ADDRESS
VRAM ADDRESS
GFX ROM read
VRAM DATA
CPU DATA
CPU STUFF
SR64KSL10 X 2
G16
F16
MB8464A-10W-15W
CMOS Static RAM
8K x 8 BITS
APAL[2..0]
ACOL[3..0]
FCOL[3..0]
FPAL[2..0]
GFXROMA[16..0]
GFXROMD[31..0]
COL[7..2]
COLB[7..5]
MAIN_DB[7..0]
BCOL[3..0]
BPAL[2..0]
MAIN_A[15..0]
SCRAMA[12..0]
VD[15..0]
VCC
VSS
SRESET
OBJCLK6
OBJCLK12
JP3
FIRQ
INT
NMI
PQ
CPURES
PE
SNDRES
VSYNC
VBLK
HSYNC
XSYNC
PREPQ
MRESET
PREPE
SRESET
VRAMCS
SCRCLK
RMRD
RD
SYSRES
www.patreon.com/jotego
github.com/jotego/jtcores/tree/master/cores/simson/sch/vendetta
JOTEGO
KONAMI PWB352292A
Sheet: /scroll/
File: scroll.kicad_sch
Title: Vendetta
Size: A3
Date: 2023-08-09
Rev: José Tejada G.
KiCad E.D.A. 8.0.9
Id: 2/4

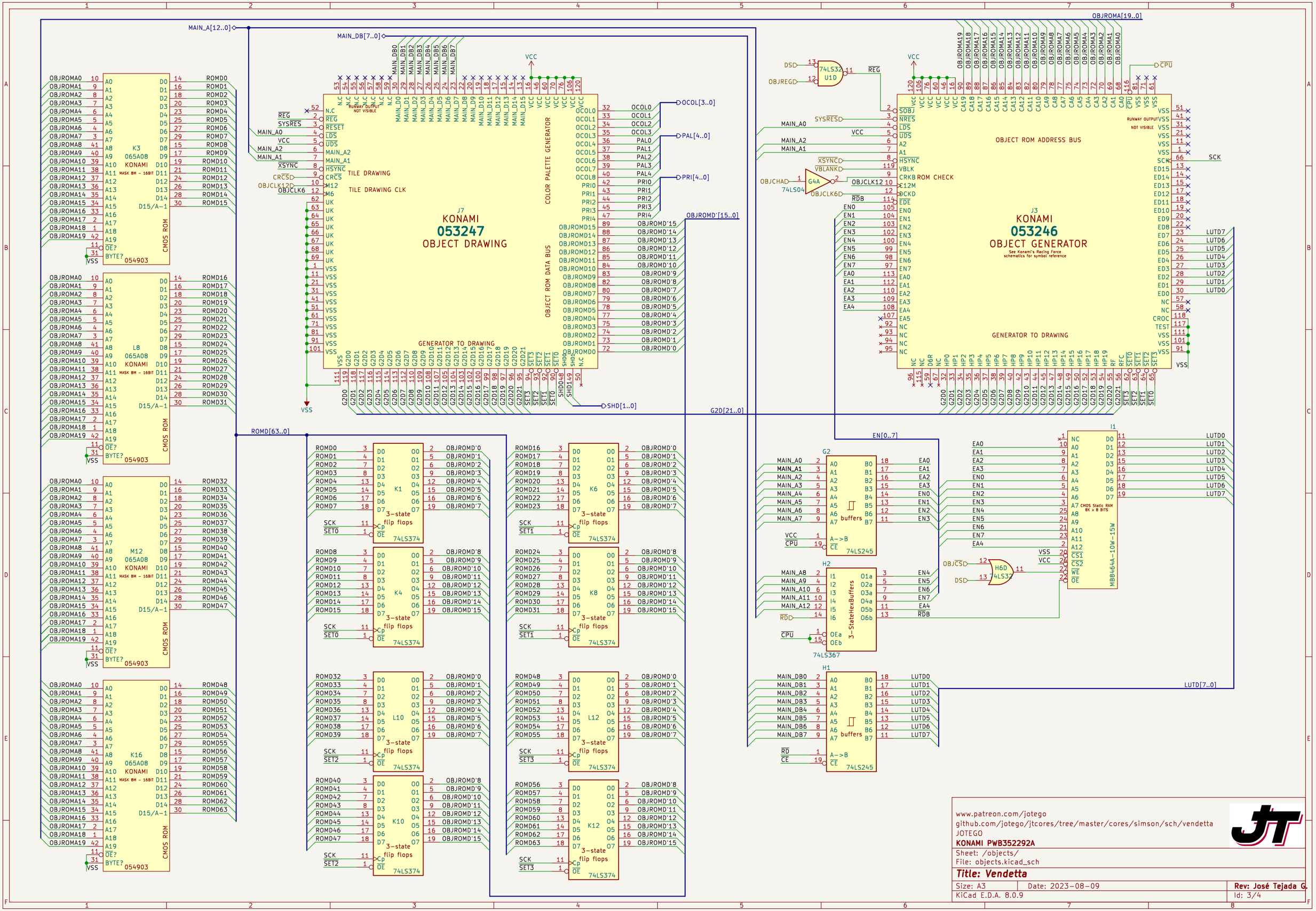

www.patreon.com/jotego
github.com/jotego/jtcores/tree/master/cores/simson/sch/vendetta
JOTEGO
KONAMI PWB352292A

Sheet: /objects/
File: objects.kicad_sch

Title: Vendetta

Size: A3	Date: 2023-08-09	**Rev: José Tejada G.**
KiCad E.D.A. 8.0.9		Id: 3/4

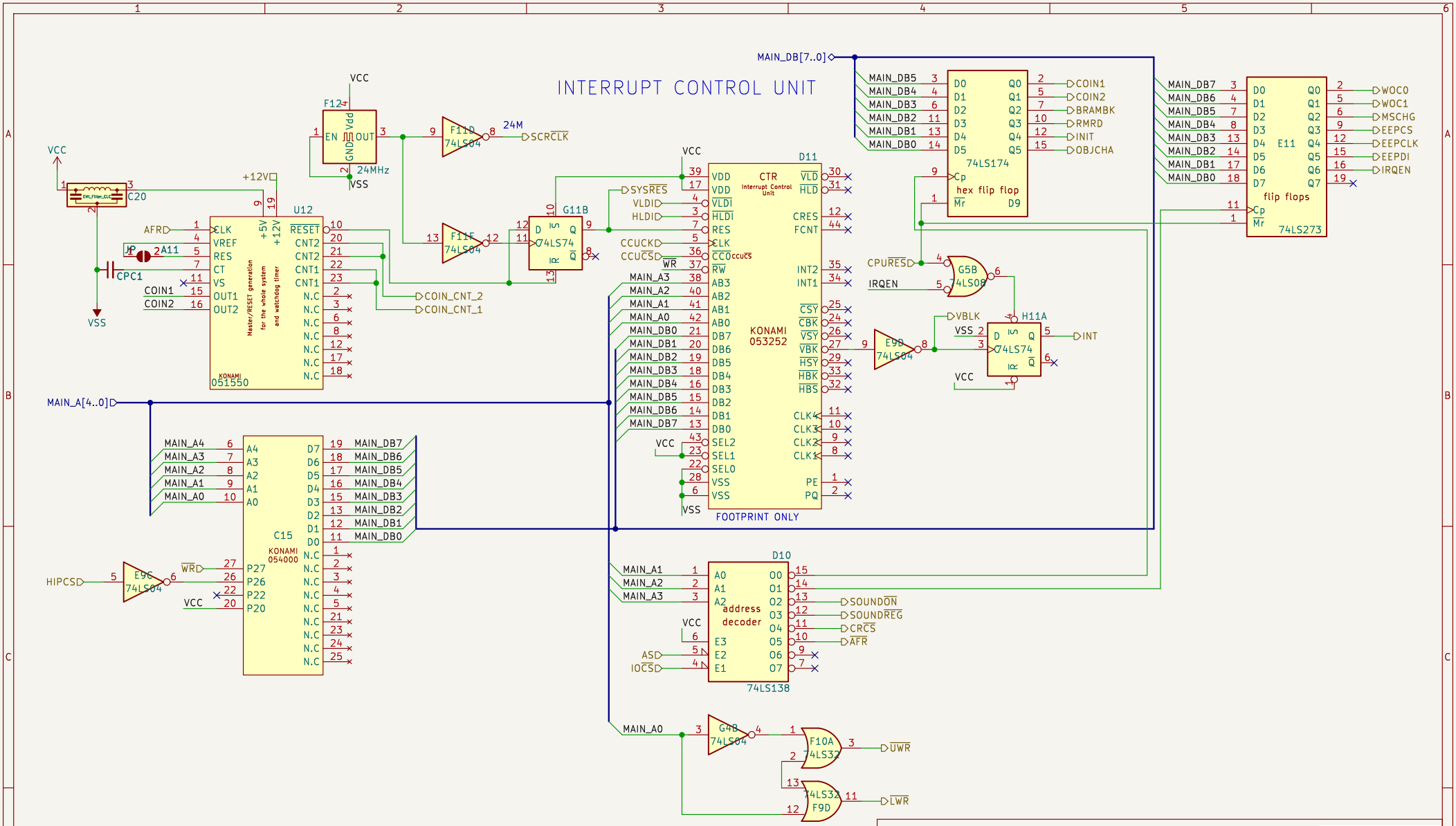

www.patreon.com/jotego
github.com/jotego/jtcores/tree/master/cores/simson/sch/vendetta
JOTEGO
KONAMI PWB352292A

Sheet: /icu/
File: icu.kicad_sch

Title: Vendetta

Size: A4	Date: 2023-08-09	**Rev: José Tejada G.**
KiCad E.D.A. 8.0.9		Id: 4/4