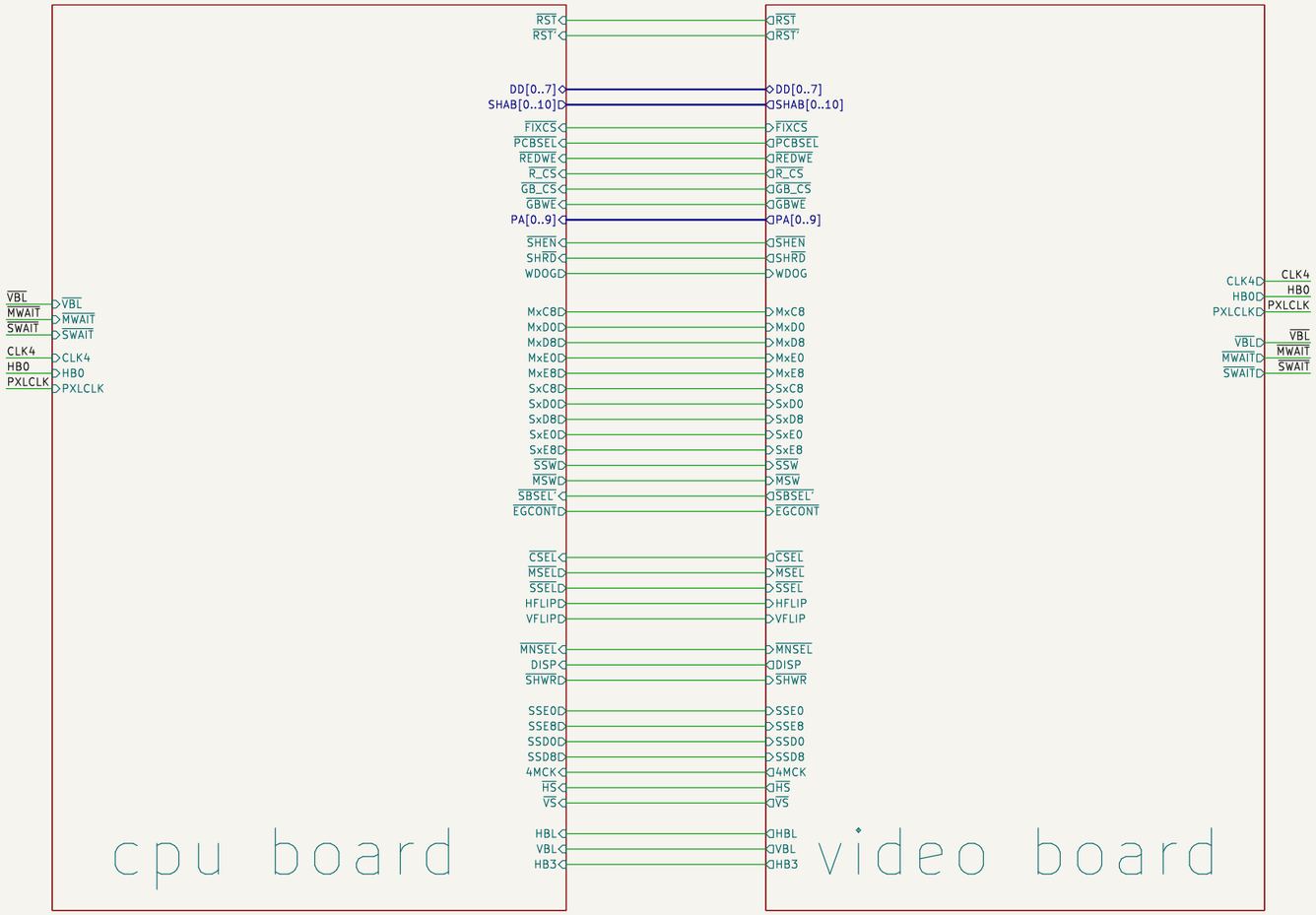

tehkanwch bootleg board

- original PCB has through-hole vias whereas the bootleg has filled vias
- original uses three custom packages from Mitsubishi with logic inside.
  These were replaced by a small daughter board on the bootleg, serving the same functionality
- different edge connectors
- debug edge connector on video board not present on bootleg
- cabinet input logic partly missing and rewired on the bootleg to replace the trackball interface for a joystick one
- different power amplifier for sound without heat sink on the bootleg
- slightly different frequencies for crystal oscillators (cost reduction?)
- device reference markers (silkscreen) on bootleg have reversed order on bootleg

Jose Tejada
https://www.patreon.com/jotego
JOTEGO

Sheet: /
File: tehkanwch.kicad_sch

Title: TEHKAN WORLD CUP (tehkanwch bootleg)

Size: A3	Date: 2024-11-15	Rev:
KiCad E.D.A. 8.0.9		Id: 1/26

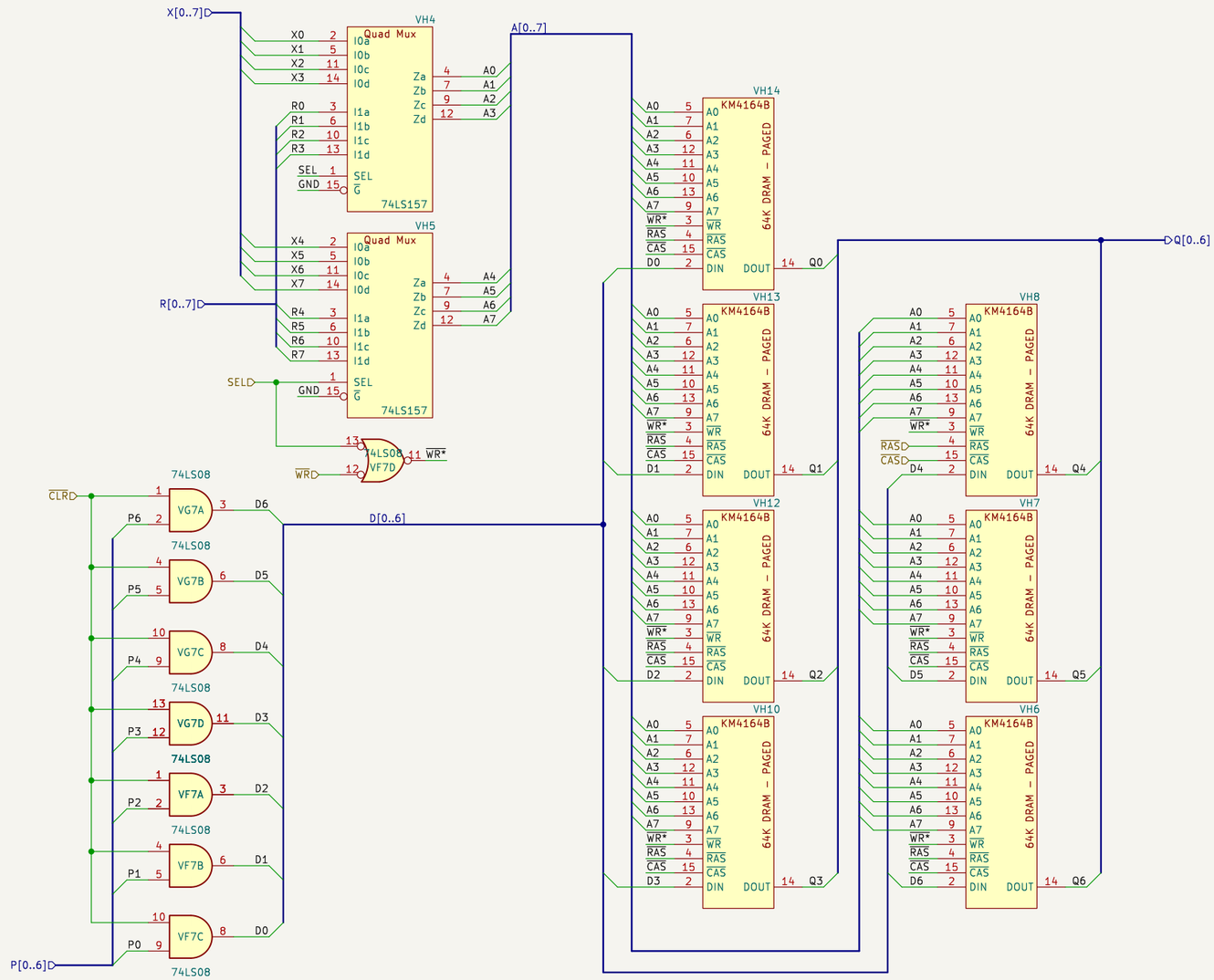

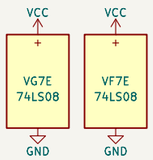

Jose Tejada
https://www.patreon.com/jotego
JOTEGO

Sheet: /video board/object/frame buffer B/
File: buffer.kicad_sch

Title: Line Buffer

Size: A3	Date: 2024-11-15	Rev:
KiCad E.D.A. 8.0.9		Id: 2/26

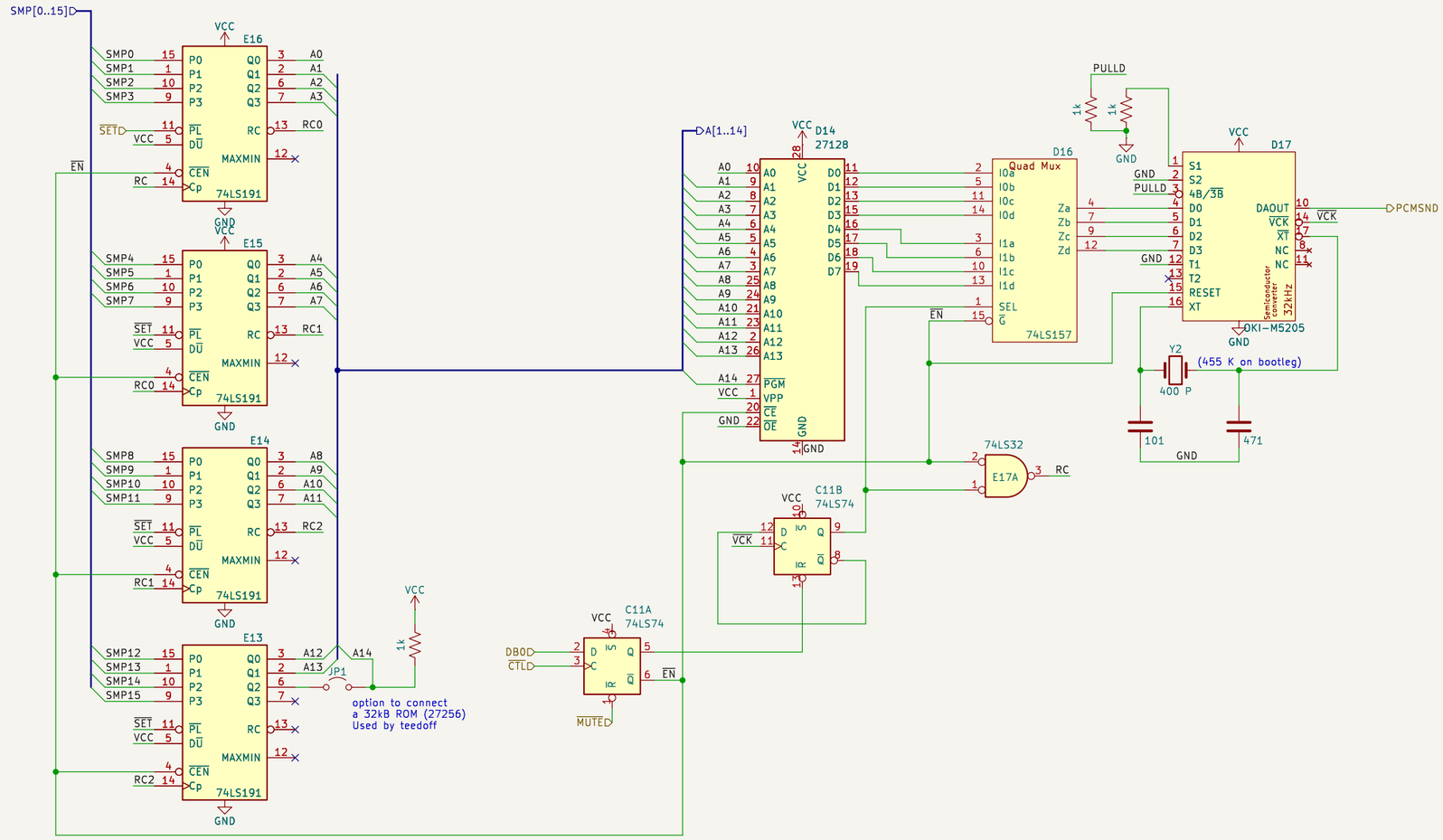

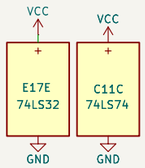

Jose Tejada
https://www.patreon.com/jotego
JOTEGO

Sheet: /cpu board/sound/PCM/
File: pcm.kicad_sch

Title: PCM

Size: A3	Date: 2024-11-15	**Rev:**
KiCad E.D.A. 8.0.9		Id: 5/26

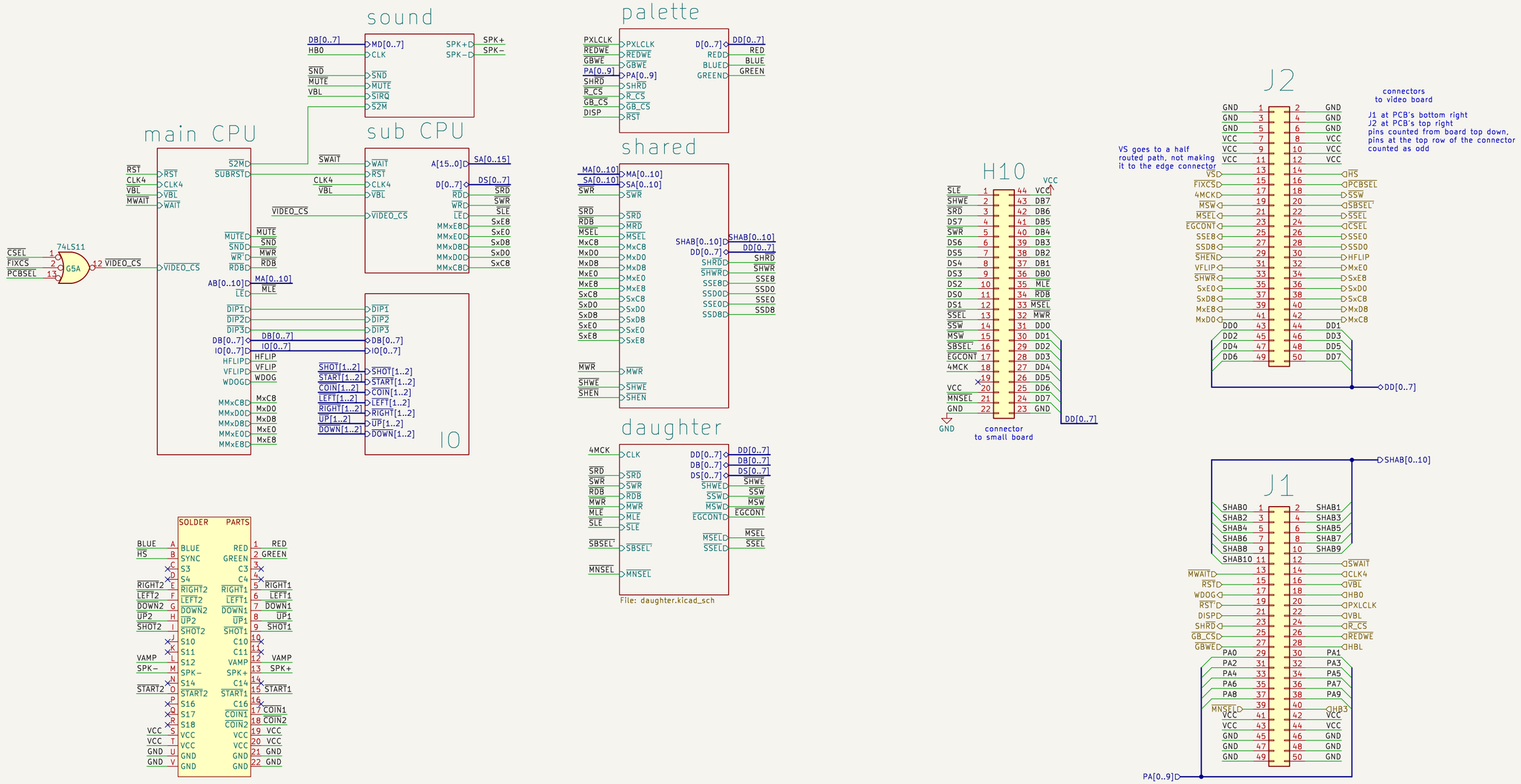

Jose Tejada
https://www.patreon.com/jotego

JOTEGO

Sheet: /cpu board/
File: cpu.kicad_sch

Title: CPU board (top board)

Size: A3	Date: 2024-11-15	Rev:
KiCad E.D.A. 8.0.9		Id: 9/26

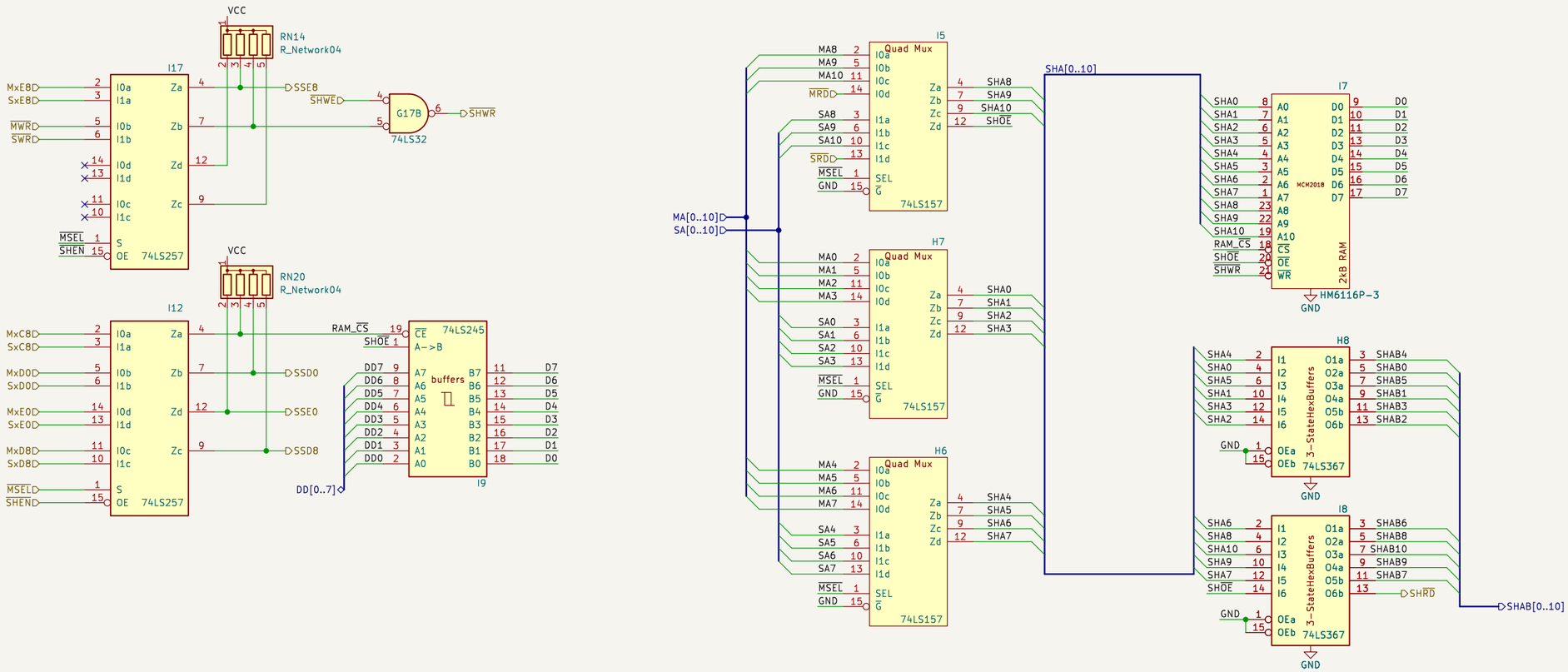

Jose Tejada
https://www.patreon.com/jotego
JOTEGO

Sheet: /cpu board/shared/
File: shared.kicad_sch

Title: Shared Memory

Size: A3	Date: 2024-11-15	Rev:
KiCad E.D.A. 8.0.9		Id: 10/26

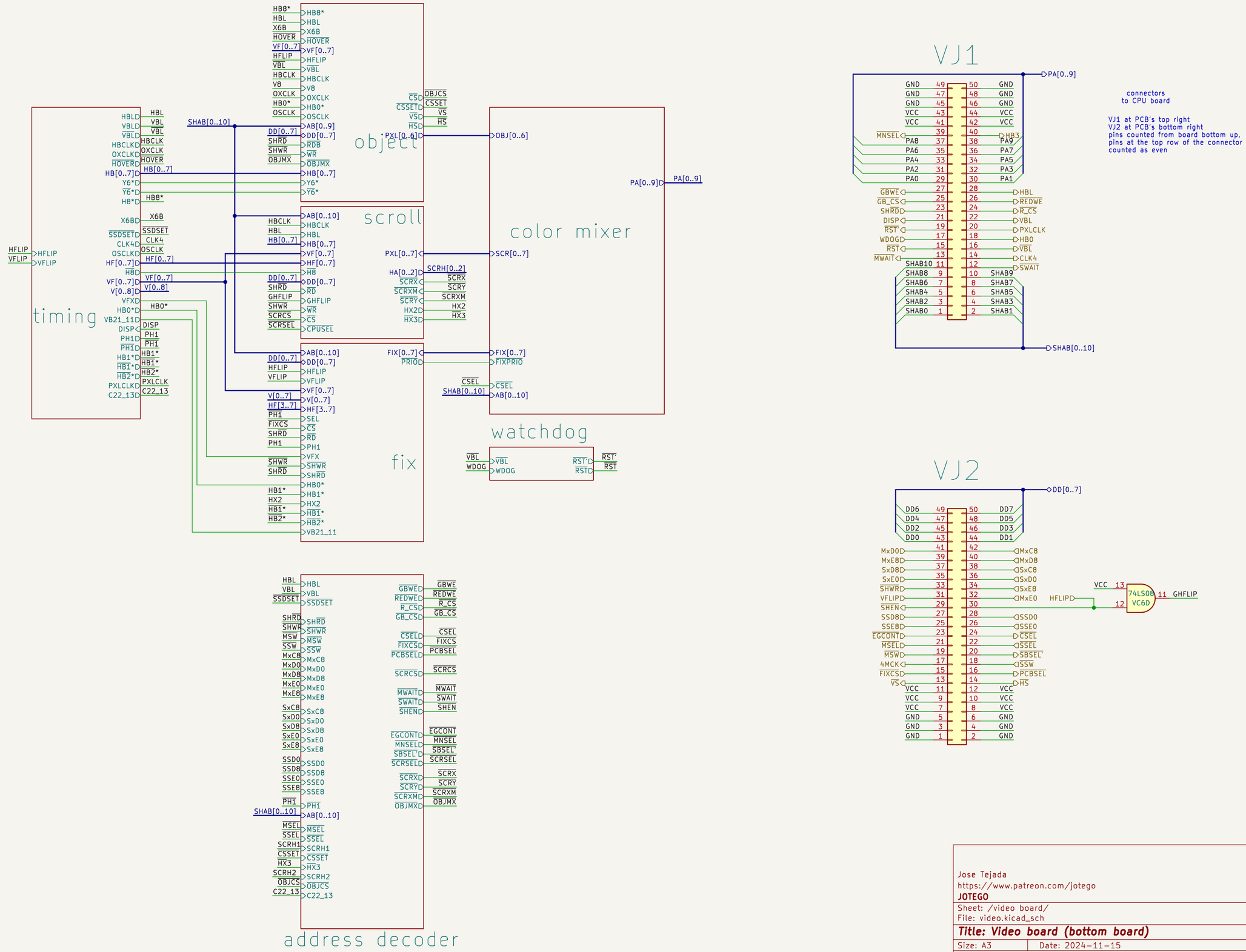

Jose Tejada
https://www.patreon.com/jotego
JOTEGO

Sheet: /video board/
File: video.kicad_sch

Title: Video board (bottom board)

Size: A3	Date: 2024-11-15	Rev:
KiCad E.D.A. 8.0.9		Id: 11/26

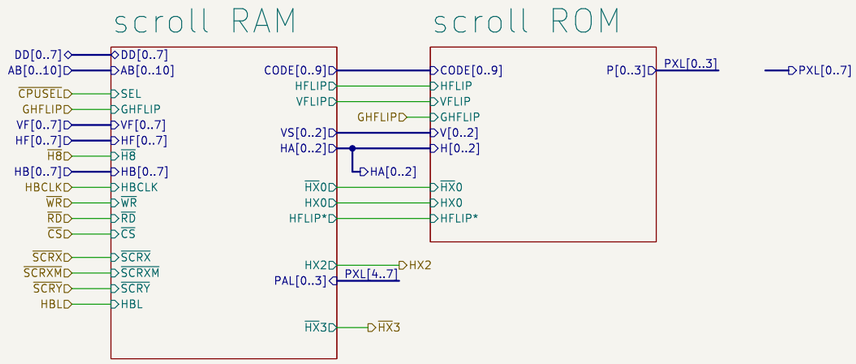

Jose Tejada
https://www.patreon.com/jotego
JOTEGO

Sheet: /video board/scroll/
File: scroll.kicad_sch

Title: Scroll Subsystem

Size: A3	Date: 2024-11-15	**Rev:**
KiCad E.D.A. 8.0.9		Id: 12/26

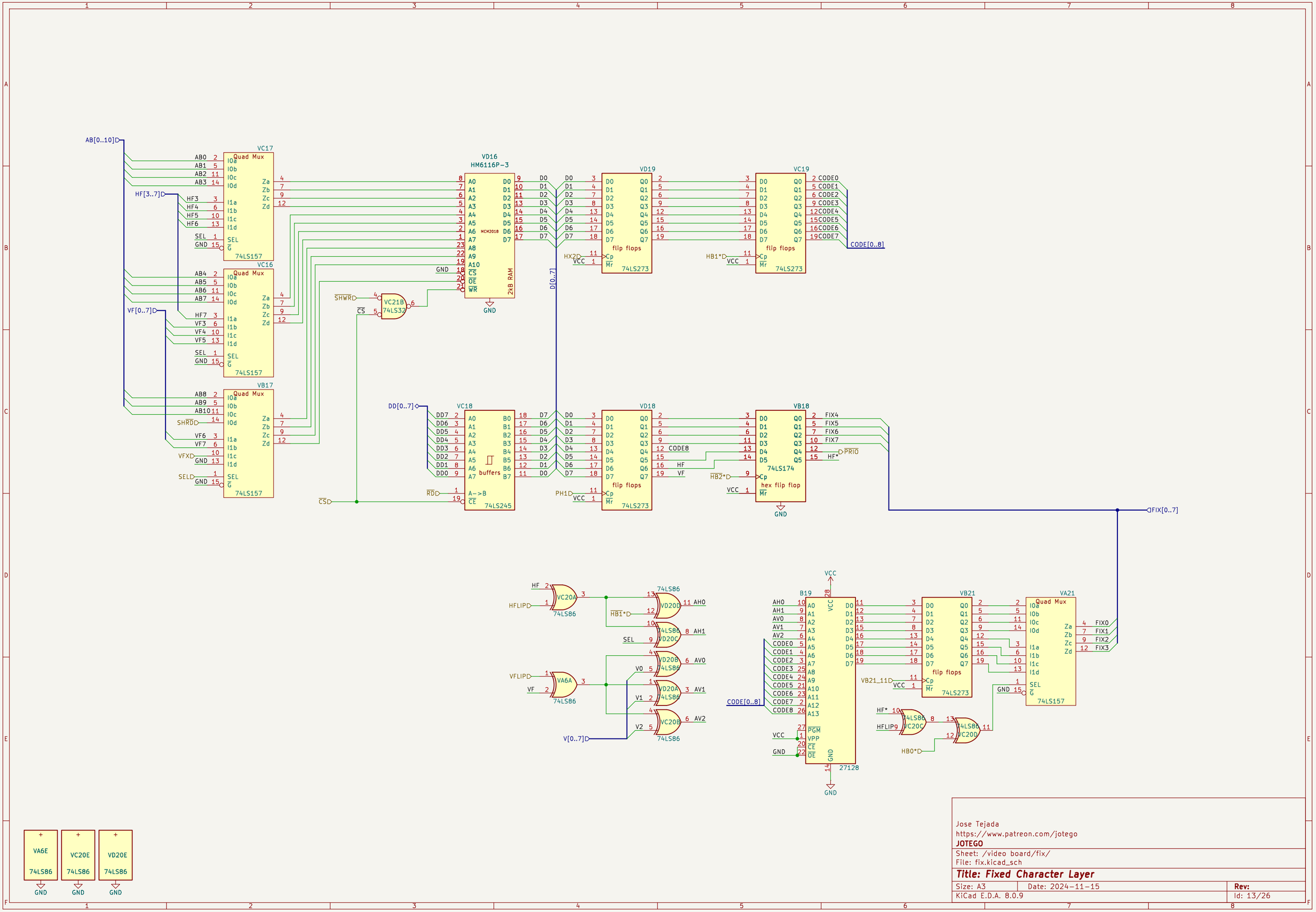

Jose Tejada
https://www.patreon.com/jotego
JOTEGO

Sheet: /video board/fix/
File: fix.kicad_sch

Title: Fixed Character Layer

Size: A3	Date: 2024-11-15	Rev:
KiCad E.D.A. 8.0.9		Id: 13/26

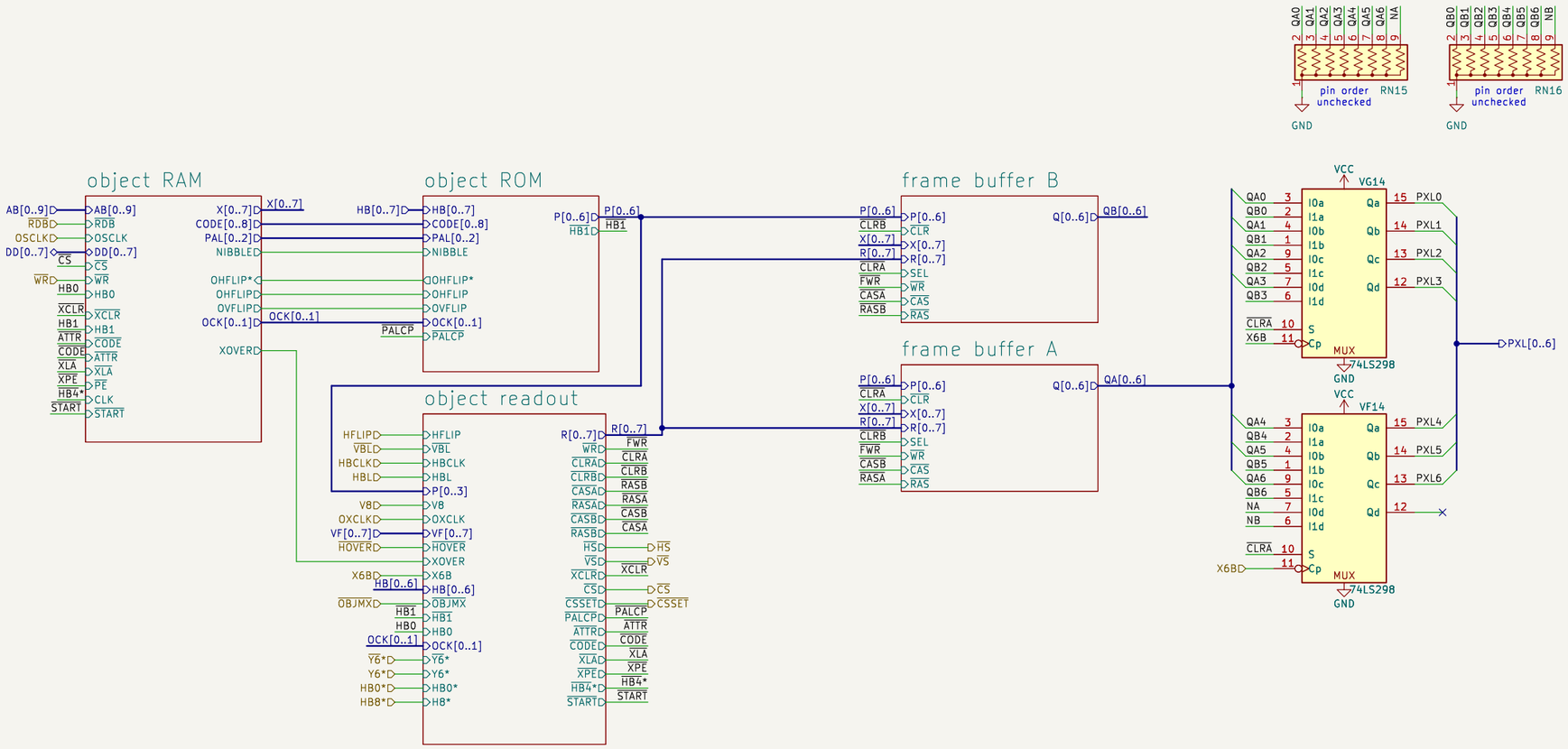

Jose Tejada
https://www.patreon.com/jotego
JOTEGO

Sheet: /video board/object/
File: object.kicad_sch

Title: Object Subsystem

Size: A3	Date: 2024-11-15	Rev:
KiCad E.D.A. 8.0.9		Id: 14/26

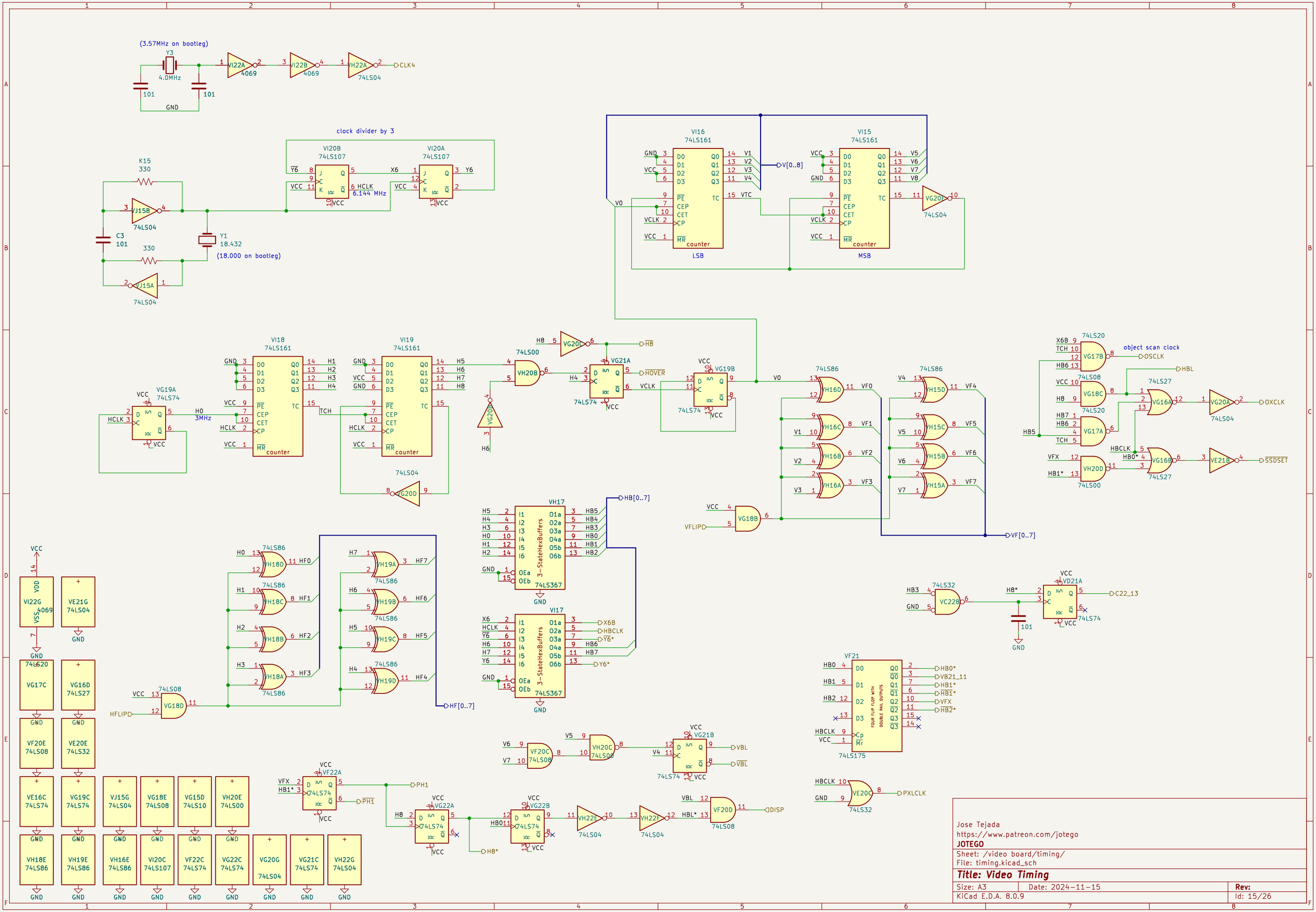
(3.57MHz on bootleg)
Y3
4.0MHz
101
101
GND
VI22A
4069
VI22B
4069
VH22A
74LS04
CLK4
clock divider by 3
VI20B
74LS107
VI20A
74LS107
K15
330
VJ15B
74LS04
C3
101
330
VJ15A
74LS04
Y1
18.432
(18.000 on bootleg)
HCLK
6.144 MHz
VI16
74LS161
LSB
VI15
74LS161
MSB
counter
V[0..8]
VG20C
74LS04
VI18
74LS161
VI19
74LS161
VG19A
74LS74
3MHz
VG20D
74LS04
74LS00
VH20B
VG20C
VG20B
VG21A
74LS74
HOVER
VG19B
74LS74
74LS86
VH16D
VH16C
VH16B
VH16A
VF[0..7]
VG18B
VFLIP
74LS20
VG17B
VG18C
VG17A
74LS08
74LS27
VG16A
VG20A
74LS04
OXCLK
object scan clock
OSCLK
HBL
VH20D
74LS00
VG16B
VE21B
SSDSET
VH17
3-StateHexBuffers
74LS367
HB[0..7]
VI17
3-StateHexBuffers
74LS367
VG18D
HFLIP
HF[0..7]
VC22B
74LS32
VD21A
74LS74
C22_13
VF21
74LS175
VE20C
74LS32
PXLCLK
VF20C
74LS08
VH20C
74LS00
VG21B
74LS74
VBL
VF22A
74LS74
PH1
VG22A
74LS74
VG22B
74LS74
VH22E
74LS04
VH22F
74LS04
VF20D
74LS08
DISP
VCC
GND
VE21G
74LS04
VG17C
74LS20
VG16D
74LS27
VF20E
74LS08
VE20E
74LS32
VE16C
74LS74
VG19C
74LS74
VJ15G
74LS04
VG18E
74LS08
VG15D
74LS10
VH20E
74LS00
VH18E
74LS86
VH19E
74LS86
VH16E
74LS86
VI20C
74LS107
VF22C
74LS74
VG22C
74LS74
VG20G
74LS04
VG21C
74LS74
VH22G
74LS04
Jose Tejada
https://www.patreon.com/jotego
JOTEGO
Sheet: /video board/timing/
File: timing.kicad_sch
Title: Video Timing
Size: A3
Date: 2024-11-15
Rev:
KiCad E.D.A. 8.0.9
Id: 15/26

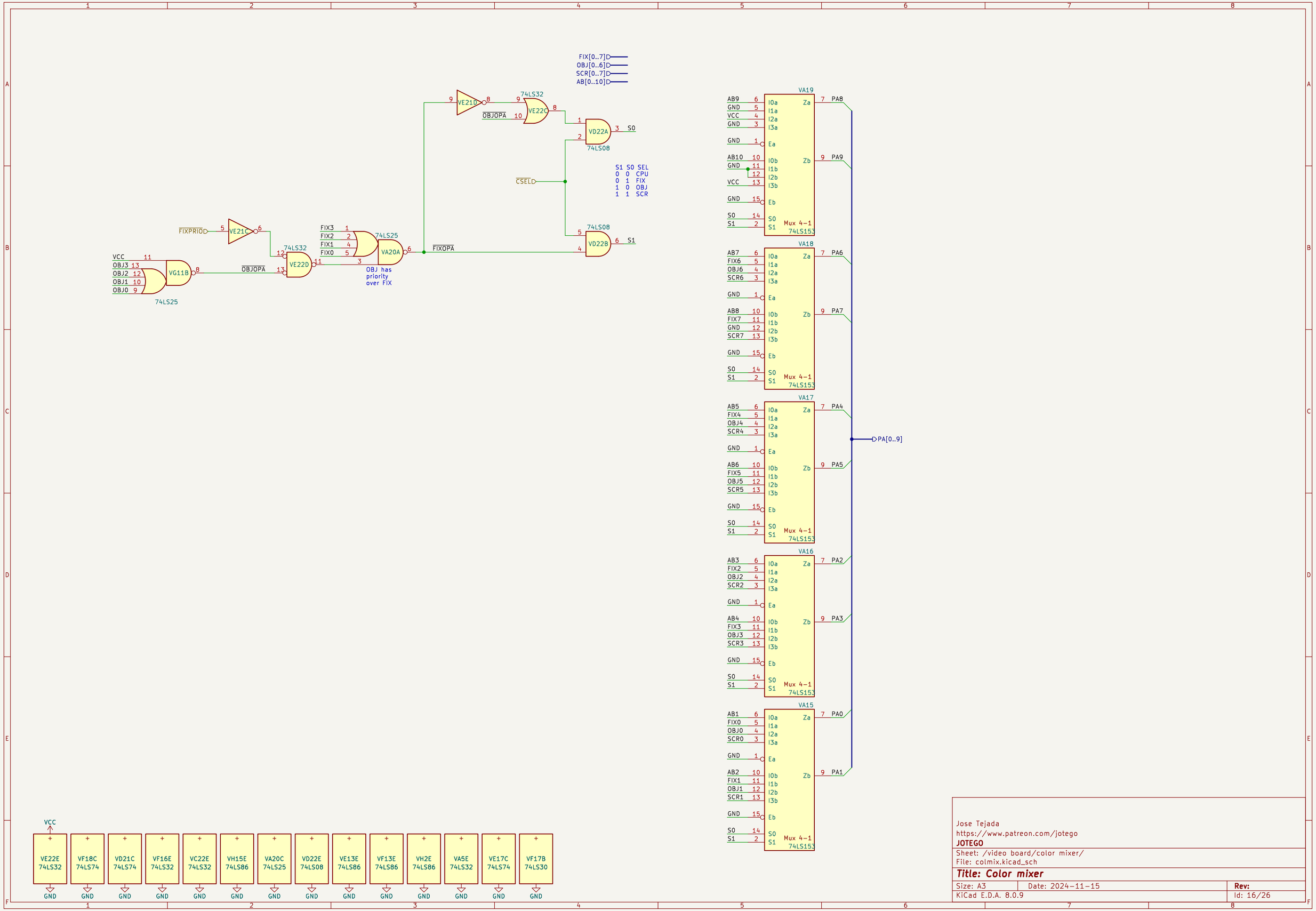

Jose Tejada
https://www.patreon.com/jotego
JOTEGO

Sheet: /video board/color mixer/
File: colmix.kicad_sch

Title: Color mixer

Size: A3	Date: 2024-11-15	Rev:
KiCad E.D.A. 8.0.9		Id: 16/26

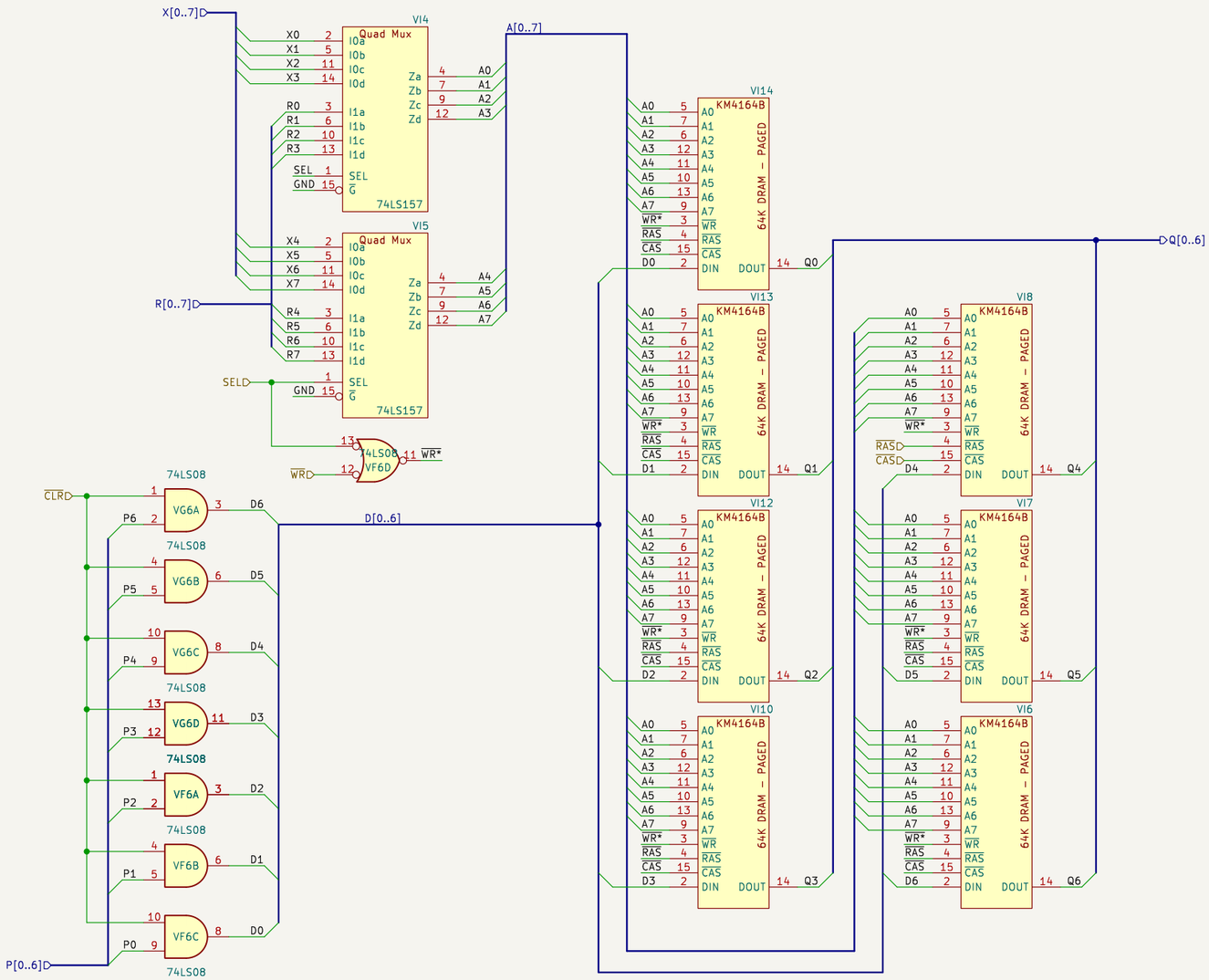

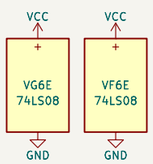

Jose Tejada
https://www.patreon.com/jotego
JOTEGO

Sheet: /video board/object/frame buffer A/
File: buffer.kicad_sch

Title: Line Buffer

Size: A3	Date: 2024-11-15	**Rev:**
KiCad E.D.A. 8.0.9		Id: 17/26

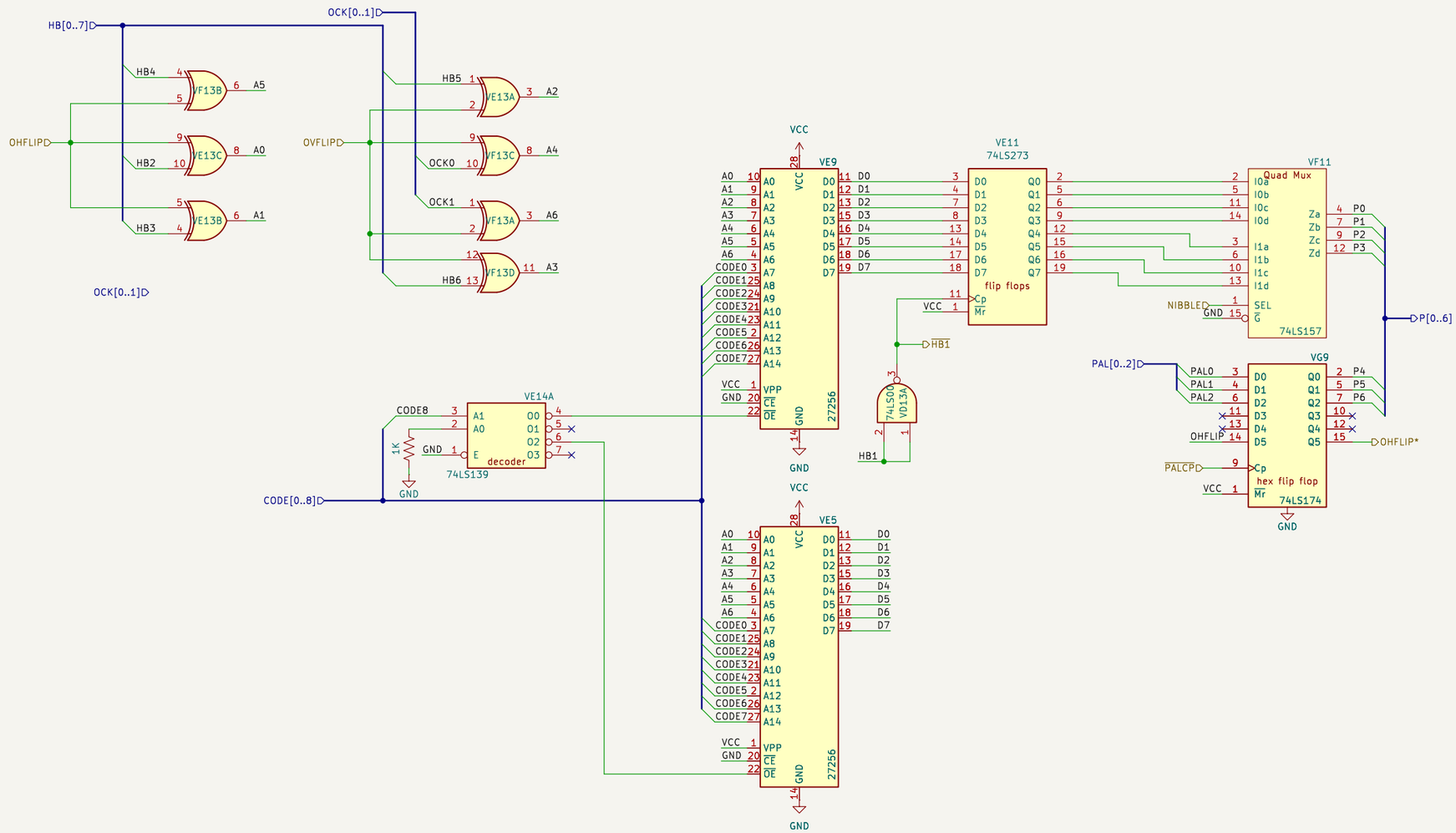

Jose Tejada
https://www.patreon.com/jotego
JOTEGO

Sheet: /video board/object/object ROM/
File: objrom.kicad_sch

Title: Object ROM

Size: A3	Date: 2024-11-15	**Rev:**
KiCad E.D.A. 8.0.9		Id: 19/26

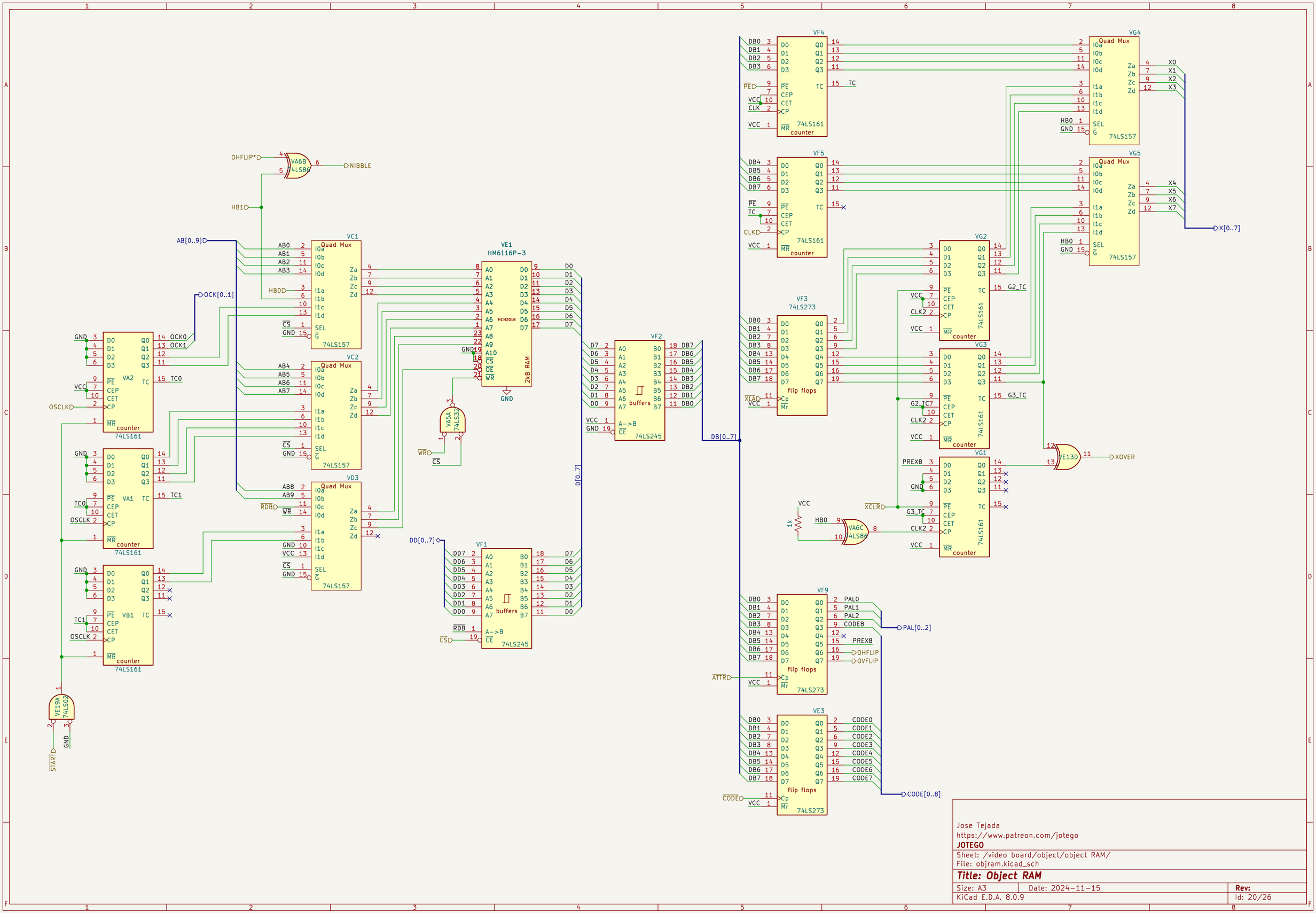

Jose Tejada
https://www.patreon.com/jotego
JOTEGO

Sheet: /video board/object/object RAM/
File: objram.kicad_sch

Title: Object RAM

Size: A3	Date: 2024-11-15	Rev:
KiCad E.D.A. 8.0.9		Id: 20/26

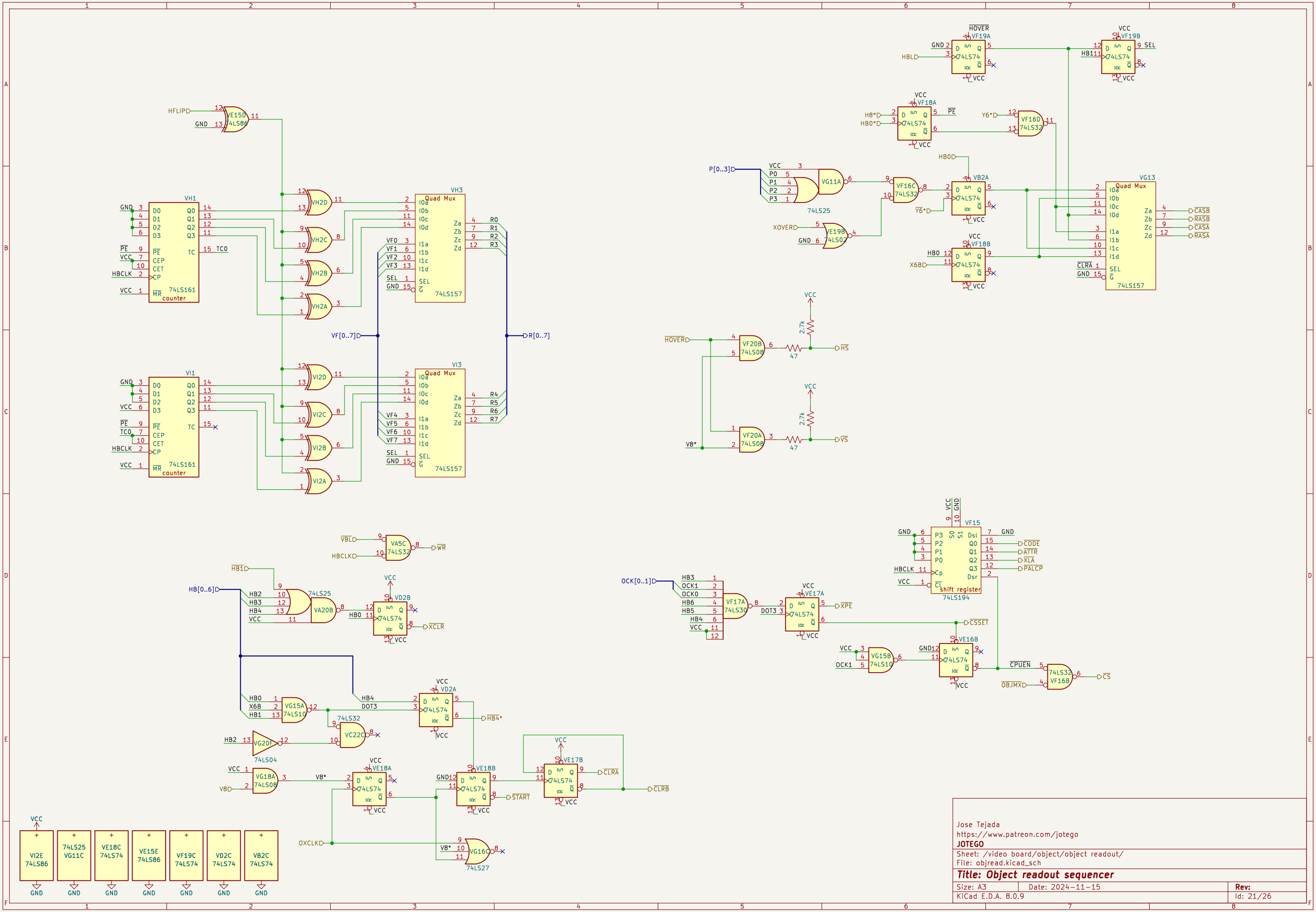

Jose Tejada
https://www.patreon.com/jotego
JOTEGO

Sheet: /video board/object/object readout/
File: objread.kicad_sch

Title: Object readout sequencer

Size: A3	Date: 2024-11-15	**Rev:**
KiCad E.D.A. 8.0.9		Id: 21/26

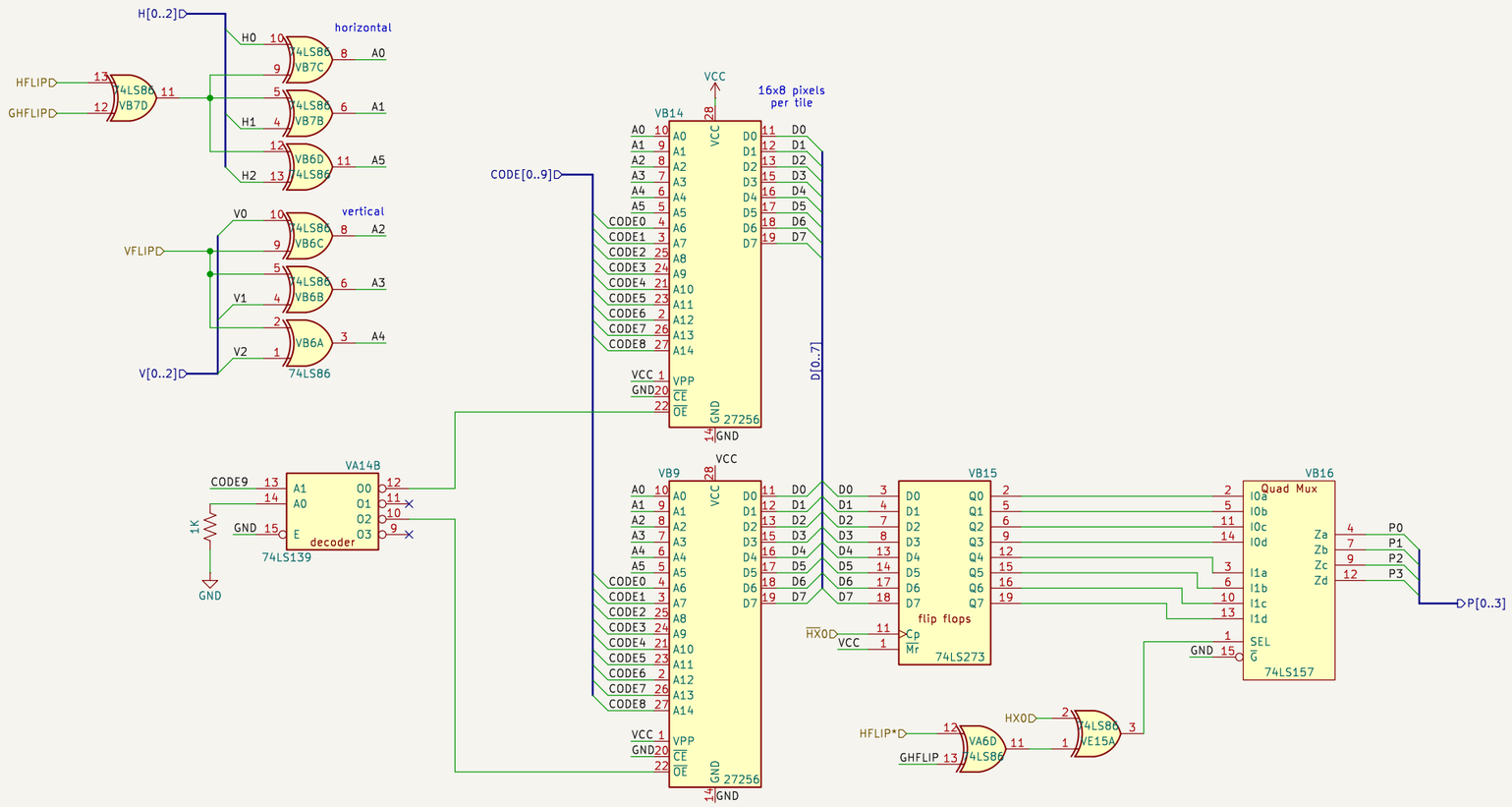

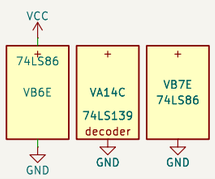

Jose Tejada
https://www.patreon.com/jotego
JOTEGO

Sheet: /video board/scroll/scroll ROM/
File: scrrom.kicad_sch

Title: scroll ROM

Size: A3	Date: 2024-11-15	Rev:
KiCad E.D.A. 8.0.9		Id: 22/26

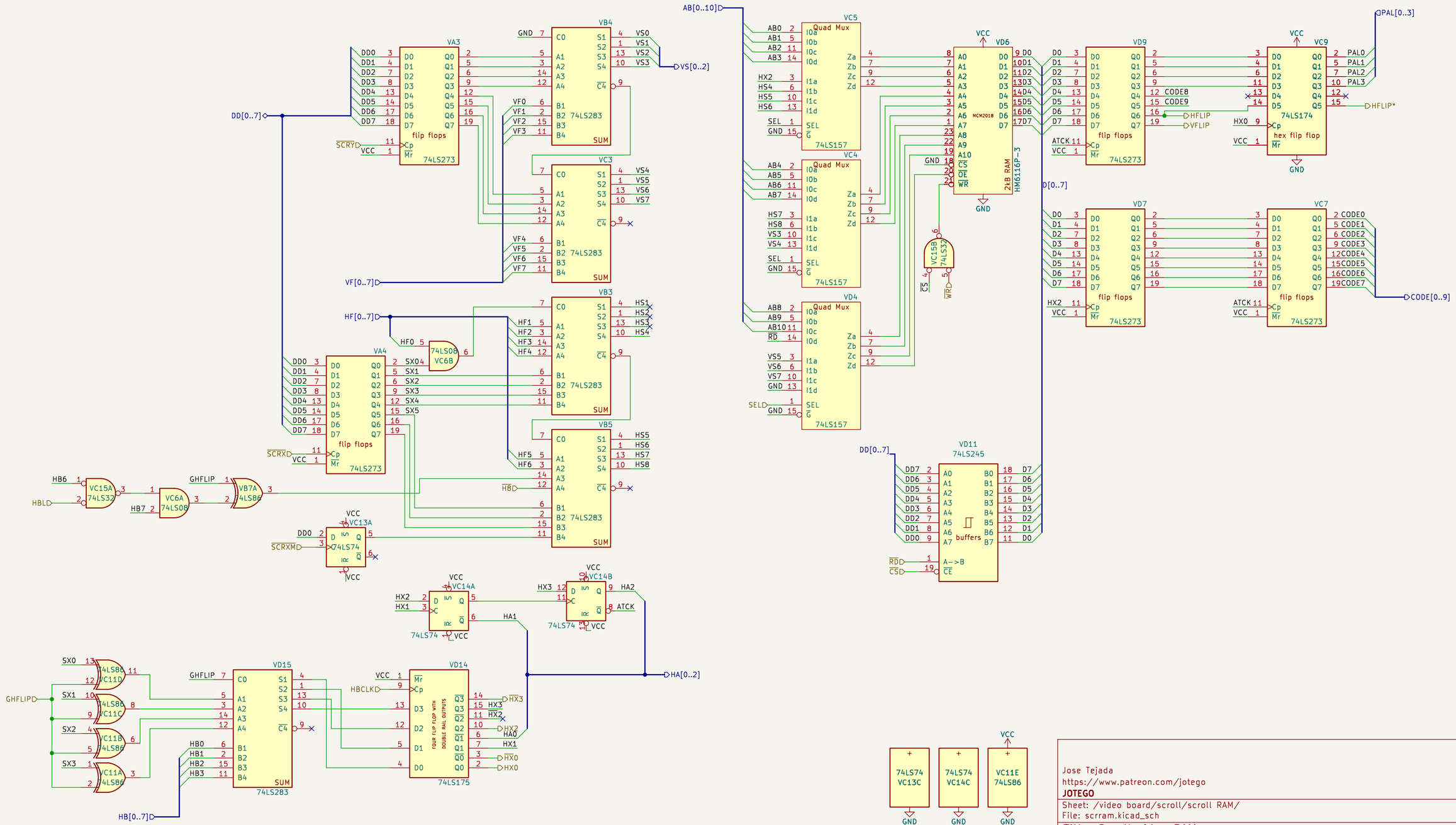

Jose Tejada
https://www.patreon.com/jotego
JOTEGO

Sheet: /video board/scroll/scroll RAM/
File: scrram.kicad_sch

Title: Scroll video RAM

Size: A3	Date: 2024-11-15	Rev:
KiCad E.D.A. 8.0.9		Id: 23/26

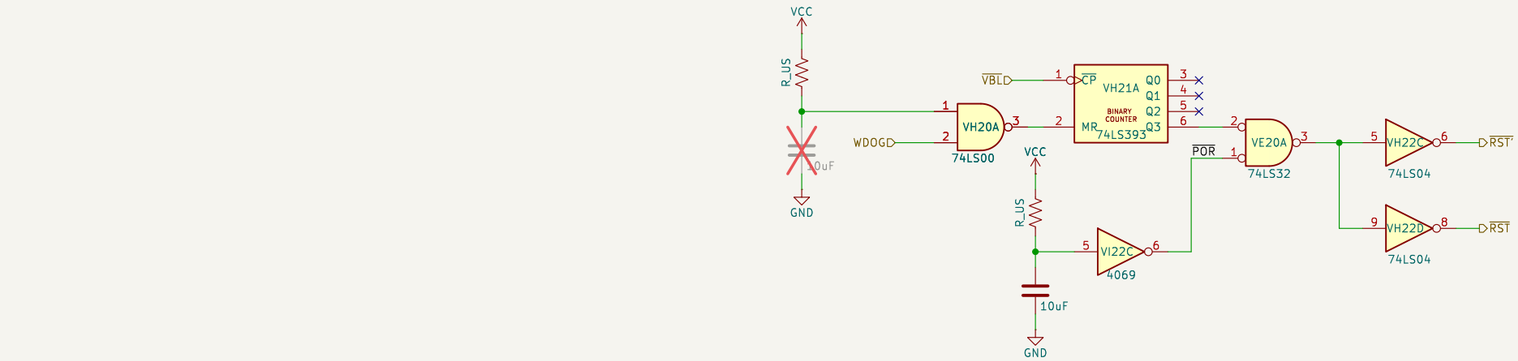

Jose Tejada
https://www.patreon.com/jotego
JOTEGO

Sheet: /video board/watchdog/
File: watchdog.kicad_sch

Title: Watchdog Circuit

Size: A3	Date: 2024-11-15	**Rev:**
KiCad E.D.A. 8.0.9		Id: 24/26

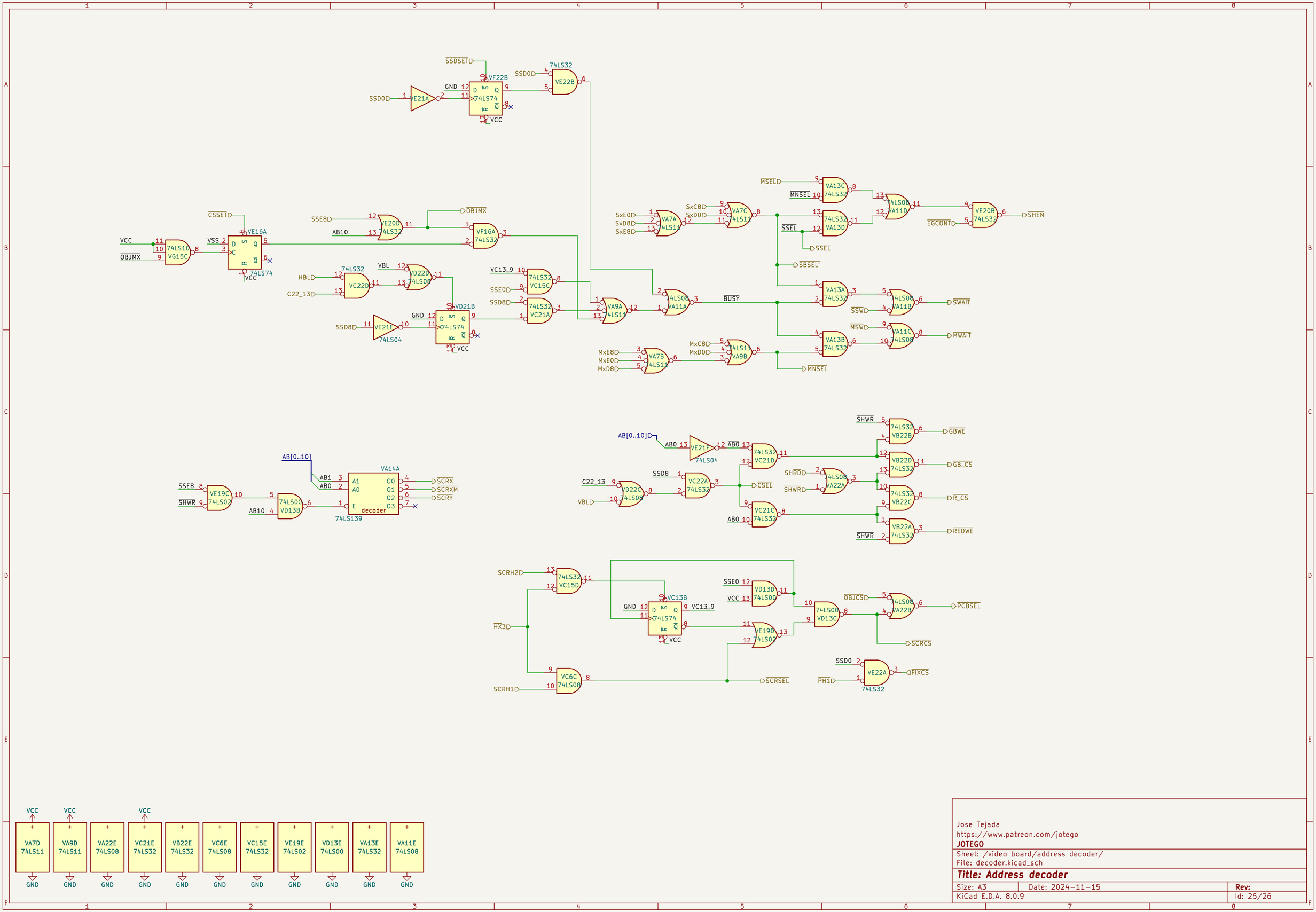

Jose Tejada
https://www.patreon.com/jotego
JOTEGO

Sheet: /video board/address decoder/
File: decoder.kicad_sch

Title: Address decoder

Size: A3	Date: 2024-11-15	Rev:
KiCad E.D.A. 8.0.9		Id: 25/26

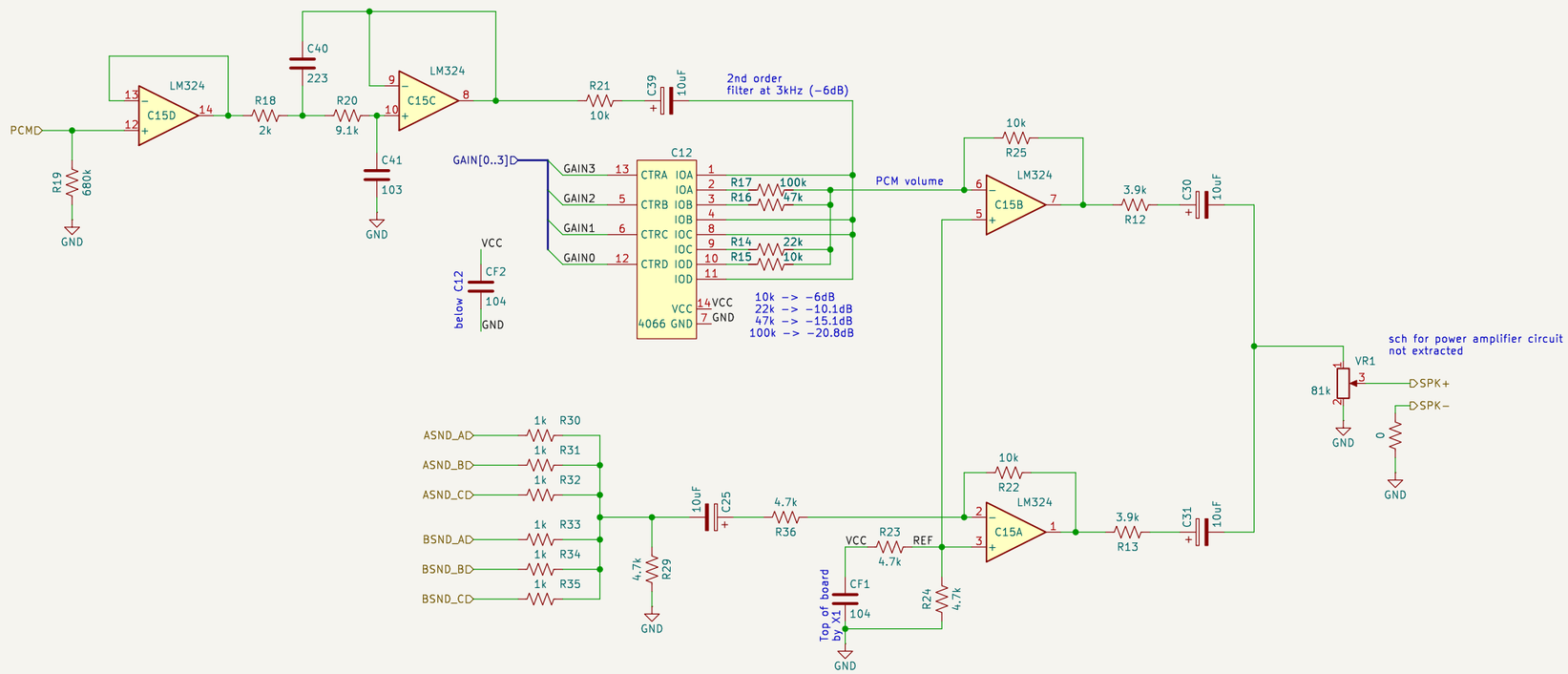

Passive component references
when shown, come from original PCB.
The bootleg did not have
references for passives.

Device components follow bootleg references.
The bootleg counts letters from left to right and numbers from bottom to top
The original counts numbers left to right and letters bottom to top.

Jose Tejada
https://www.patreon.com/jotego
JOTEGO

Sheet: /cpu board/sound/analog/
File: analog.kicad_sch

Title: Sound amplifiers

Size: A3	Date: 2024-11-15	Rev:
KiCad E.D.A. 8.0.9		Id: 26/26

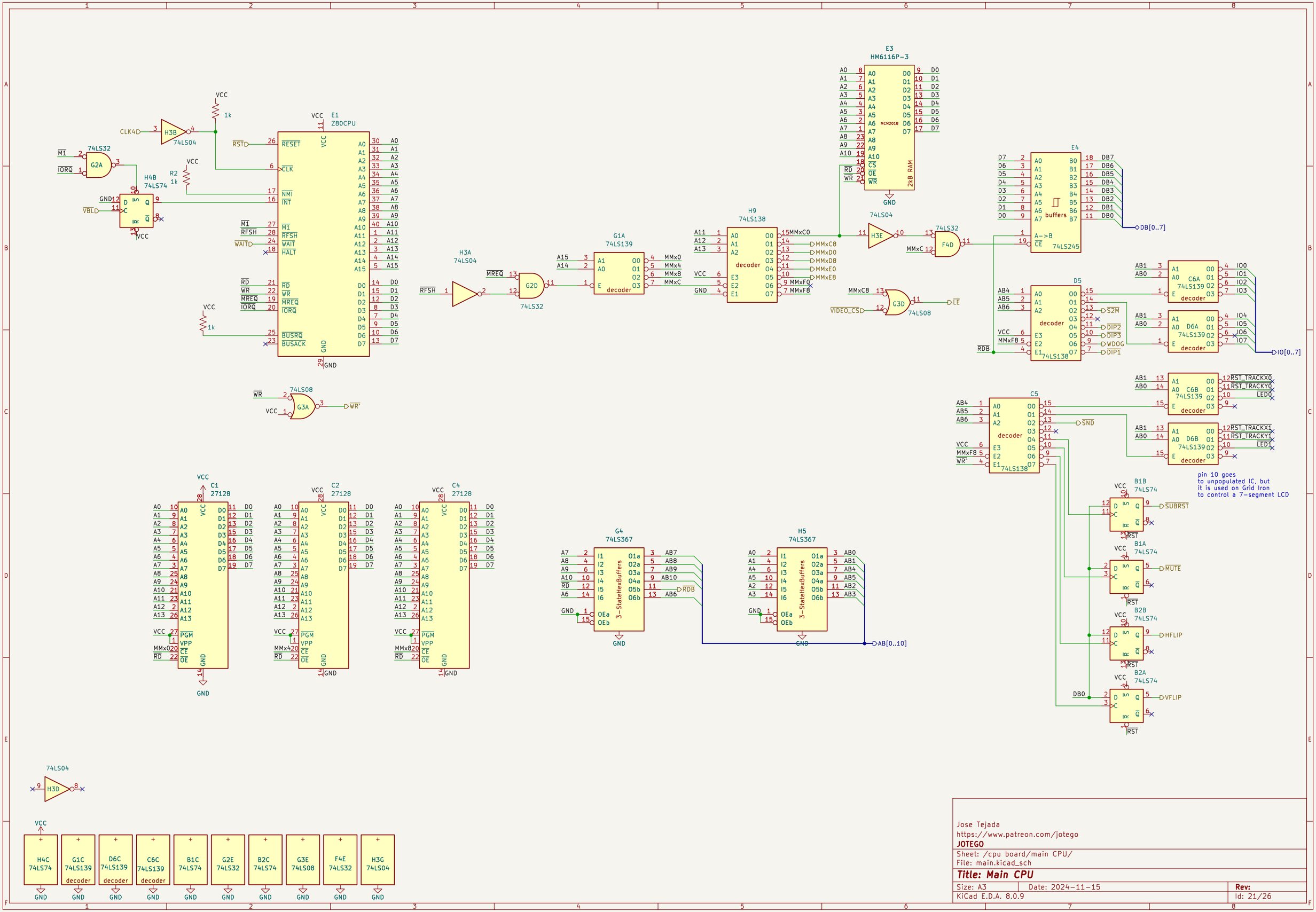
E1
Z80CPU
E3
HM6116P-3
2kB RAM
E4
74LS245
buffers
D5
74LS138
decoder
C5
C6A
C6B
D6A
D6B
74LS139
B1B
B1A
B2B
B2A
74LS74
C1
C2
C4
27128
G4
H5
74LS367
3-StateHexBuffers
H9
G1A
H3A
H3B
H4B
G2A
G2D
G3A
G3D
H3E
F4D
H3D
H4C
G1C
D6C
C6C
B1C
G2E
B2C
G3E
F4E
H3G
pin 10 goes
to unpopulated IC, but
it is used on Grid Iron
to control a 7-segment LCD
Jose Tejada
https://www.patreon.com/jotego
JOTEGO
Sheet: /cpu board/main CPU/
File: main.kicad_sch
Title: Main CPU
Size: A3
Date: 2024-11-15
Rev:
KiCad E.D.A. 8.0.9
Id: 21/26

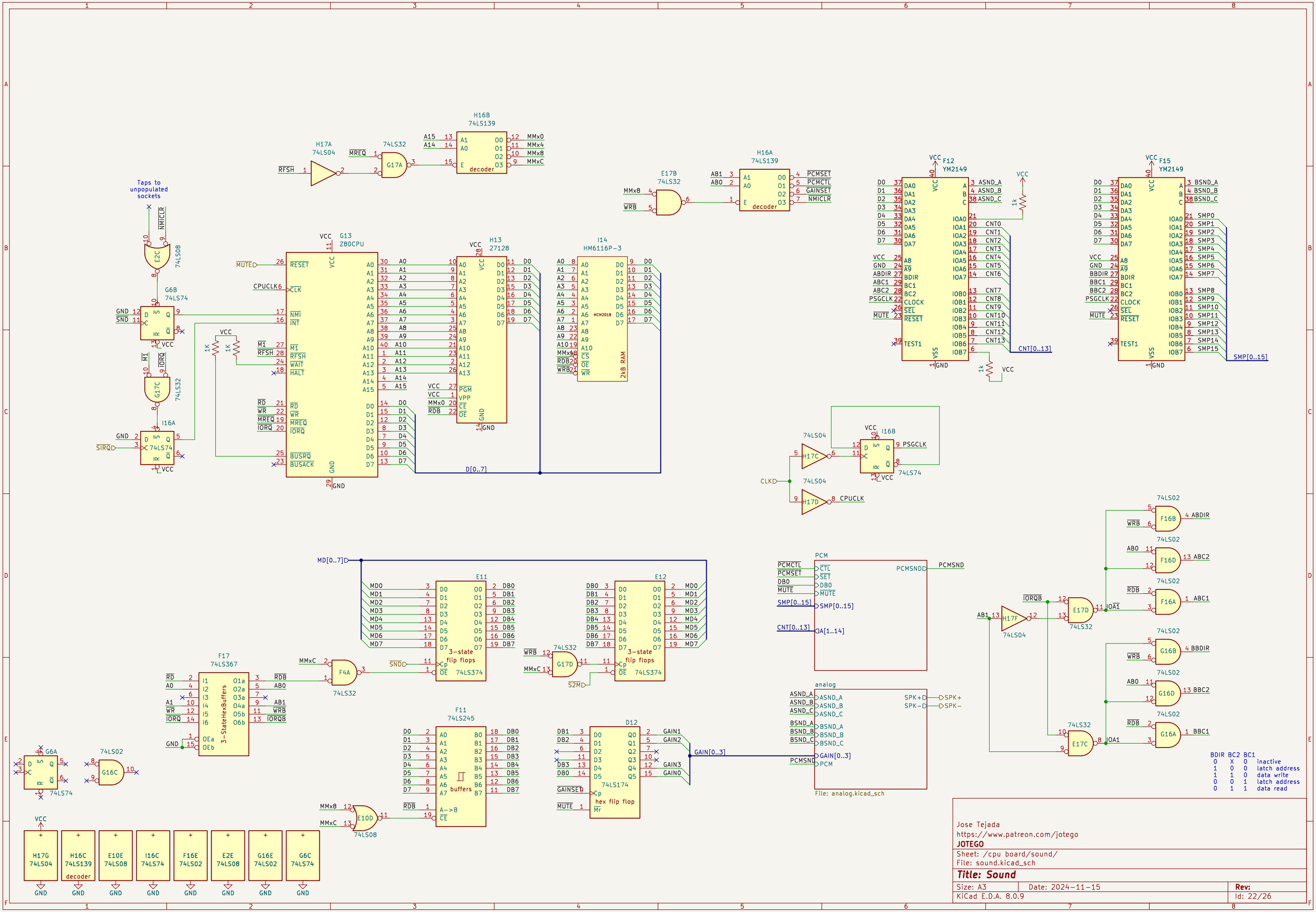
H16B
74LS139
H17A
74LS04
74LS32
G17A
RFSH
MREQ
A15
A14
MMx0
MMx4
MMx8
MMxC
decoder
E17B
74LS32
MMx8
WRB
AB1
AB0
H16A
74LS139
PCMSET
PCMCTL
GAINSET
NMICLR
decoder
Taps to unpopulated sockets
NMICLR
E2C
74LS08
G6B
74LS74
GND
SND
VCC
M1
IORQ
G17C
74LS32
I16A
74LS74
GND
SIRQ
VCC
G13
Z80CPU
MUTE
CPUCLK
RESET
CLK
NMI
INT
M1
RFSH
WAIT
HALT
RD
WR
MREQ
IORQ
BUSRQ
BUSACK
A0
A1
A2
A3
A4
A5
A6
A7
A8
A9
A10
A11
A12
A13
A14
A15
D0
D1
D2
D3
D4
D5
D6
D7
GND
1K
1K
VCC
H13
27128
PGM
VPP
CE
OE
MMx0
RDB
D[0..7]
I14
HM6116P-3
MCM2018
2kB RAM
CS
OE
WR
RDB
WRB
F12
YM2149
DA0
DA1
DA2
DA3
DA4
DA5
DA6
DA7
A8
A9
BDIR
BC1
BC2
CLOCK
SEL
RESET
TEST1
VSS
GND
ASND_A
ASND_B
ASND_C
IOA0
IOA1
IOA2
IOA3
IOA4
IOA5
IOA6
IOA7
IOB0
IOB1
IOB2
IOB3
IOB4
IOB5
IOB6
IOB7
CNT0
CNT1
CNT2
CNT3
CNT4
CNT5
CNT6
CNT7
CNT8
CNT9
CNT10
CNT11
CNT12
CNT13
CNT[0..13]
1k
F15
YM2149
BSND_A
BSND_B
BSND_C
SMP0
SMP1
SMP2
SMP3
SMP4
SMP5
SMP6
SMP7
SMP8
SMP9
SMP10
SMP11
SMP12
SMP13
SMP14
SMP15
SMP[0..15]
74LS04
H17C
CLK
H17D
CPUCLK
I16B
74LS74
PSGCLK
MD[0..7]
E11
3-state flip flops
74LS374
MD0
MD1
MD2
MD3
MD4
MD5
MD6
MD7
DB0
DB1
DB2
DB3
DB4
DB5
DB6
DB7
E12
3-state flip flops
74LS374
SND
F4A
74LS32
WRB
MMxC
G17D
74LS32
S2M
F17
74LS367
3-StateHexBuffers
OEa
OEb
RD
A0
A1
WR
IORQ
RDB
AB0
AB1
WRB
IORQB
F11
74LS245
buffers
A->B
CE
MMx8
MMxC
E10D
74LS08
D12
74LS174
hex flip flop
Mr
GAINSET
MUTE
GAIN1
GAIN2
GAIN3
GAIN0
GAIN[0..3]
PCM
PCMCTL
PCMSET
DB0
MUTE
SMP[0..15]
CNT[0..13]
CTL
SET
PCMSND
analog
ASND_A
ASND_B
ASND_C
BSND_A
BSND_B
BSND_C
GAIN[0..3]
PCM
SPK+
SPK−
File: analog.kicad_sch
74LS02
F16B
F16D
F16A
G16B
G16D
G16A
ABDIR
ABC2
ABC1
BBDIR
BBC2
BBC1
IORQB
H17F
74LS04
E17D
74LS32
E17C
IOA1
G6A
74LS74
74LS02
G16C
H17G
74LS04
H16C
74LS139
decoder
E10E
74LS08
I16C
74LS74
F16E
74LS02
E2E
74LS08
G16E
74LS02
G6C
74LS74
GND
BDIR BC2 BC1
0 X 0 inactive
1 0 0 latch address
1 1 0 data write
0 0 1 latch address
0 1 1 data read
Jose Tejada
https://www.patreon.com/jotego
JOTEGO
Sheet: /cpu board/sound/
File: sound.kicad_sch
Title: Sound
Size: A3
Date: 2024-11-15
Rev:
KiCad E.D.A. 8.0.9
Id: 22/26

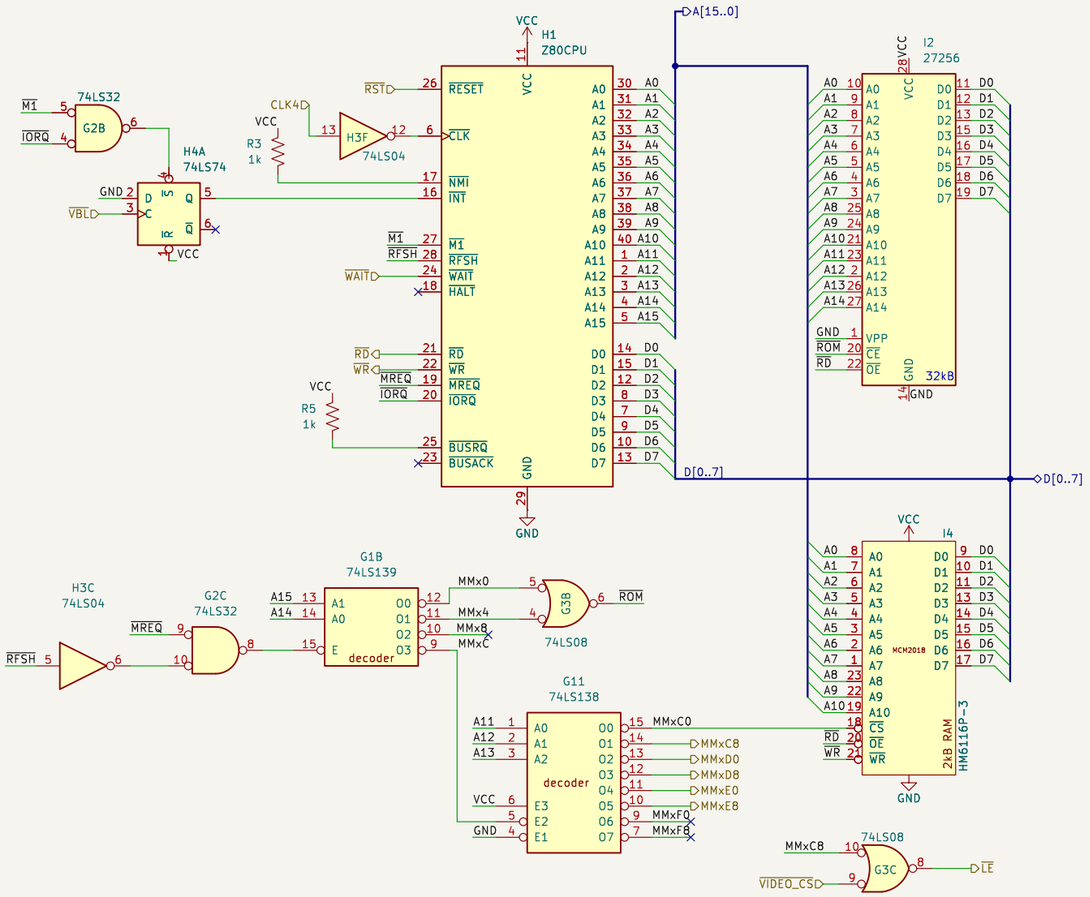

Jose Tejada
https://www.patreon.com/jotego
JOTEGO

Sheet: /cpu board/sub CPU/
File: subcpu.kicad_sch

Title: Subordinate CPU

Size: A3	Date: 2024-11-15	Rev:
KiCad E.D.A. 8.0.9		Id: 23/26

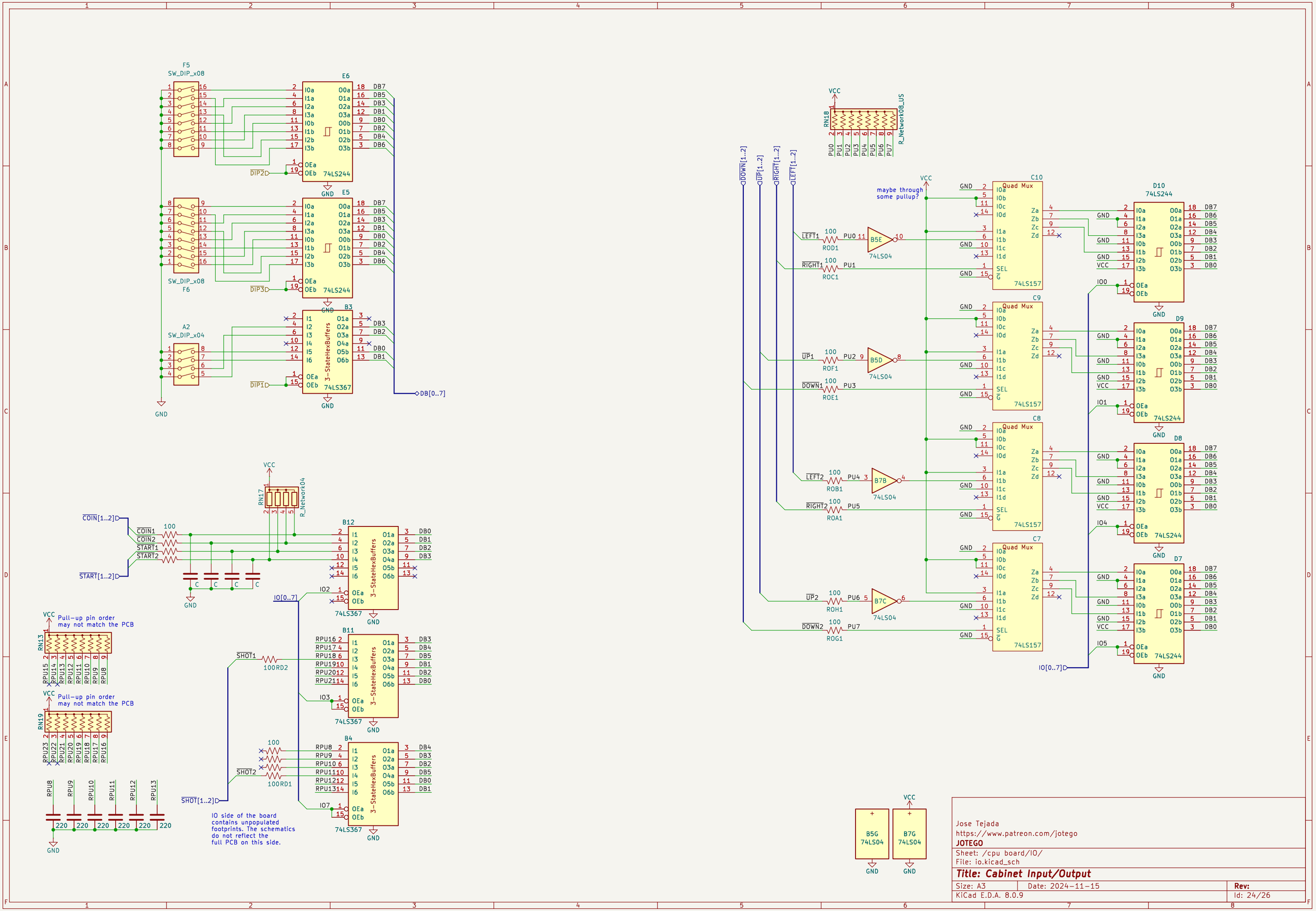
F5
SW_DIP_x08
E6
74LS244
E5
74LS244
F6
SW_DIP_x08
A2
SW_DIP_x04
B3
3-StateHexBuffers
74LS367
DIP2
DIP3
DIP1
DB[0..7]
GND
VCC
RN18
R_Network08_US
PU0
PU1
PU2
PU3
PU4
PU5
PU6
PU7
DOWN[1..2]
UP[1..2]
RIGHT[1..2]
LEFT[1..2]
maybe through
some pullup?
LEFT1
RIGHT1
UP1
DOWN1
LEFT2
RIGHT2
UP2
DOWN2
ROD1
ROC1
ROF1
ROE1
ROB1
ROA1
ROH1
ROG1
B5E
B5D
B7B
B7C
74LS04
C10
C9
C8
C7
Quad Mux
74LS157
D10
D9
D8
D7
IO0
IO1
IO4
IO5
IO[0..7]
COIN[1..2]
START[1..2]
COIN1
COIN2
START1
START2
RN17
R_Network04
B12
B11
B4
IO2
IO3
IO7
SHOT1
SHOT2
100RD2
100RD1
SHOT[1..2]
RN13
RN19
Pull-up pin order
may not match the PCB
RPU8
RPU9
RPU10
RPU11
RPU12
RPU13
IO side of the board
contains unpopulated
footprints. The schematics
do not reflect the
full PCB on this side.
B5G
74LS04
B7G
74LS04
Jose Tejada
https://www.patreon.com/jotego
JOTEGO
Sheet: /cpu board/IO/
File: io.kicad_sch
Title: Cabinet Input/Output
Size: A3
Date: 2024-11-15
Rev:
KiCad E.D.A. 8.0.9
Id: 24/26

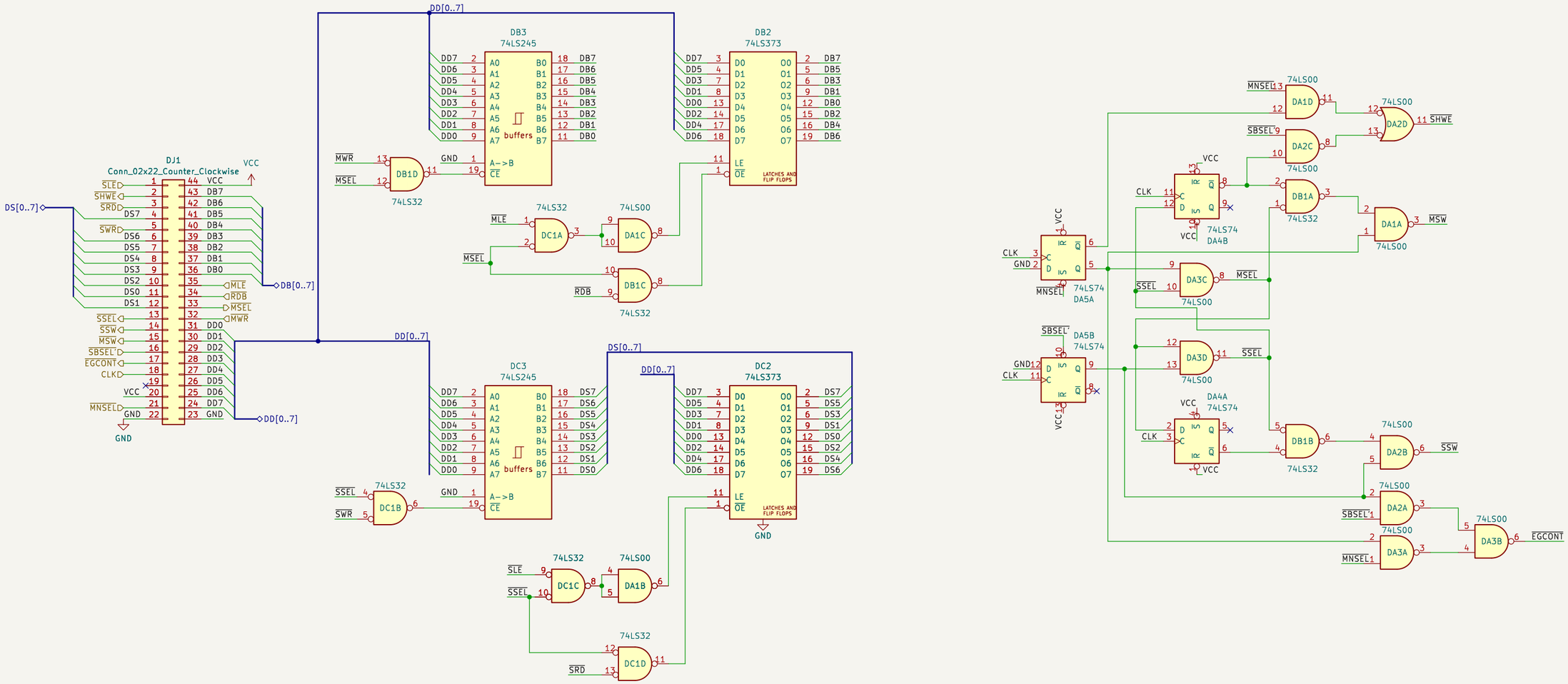

This circuit takes three small boards on the original PCB.
These boards were manufactured by Mitsubishi and contain the circuits seen on the bootleg
- MA7053 x2, 28 pin each
- MA7054 x1, 15 pins
The layout around the daughter board on the bootleg differs slightly from the original in order to adjust the pinout to a single 44-pin board.

Jose Tejada
https://www.patreon.com/jotego
JOTEGO

Sheet: /cpu board/daughter/
File: daughter.kicad_sch

Title: Small daughter board

Size: A3	Date: 2024-11-15	Rev:
KiCad E.D.A. 8.0.9		Id: 25/26

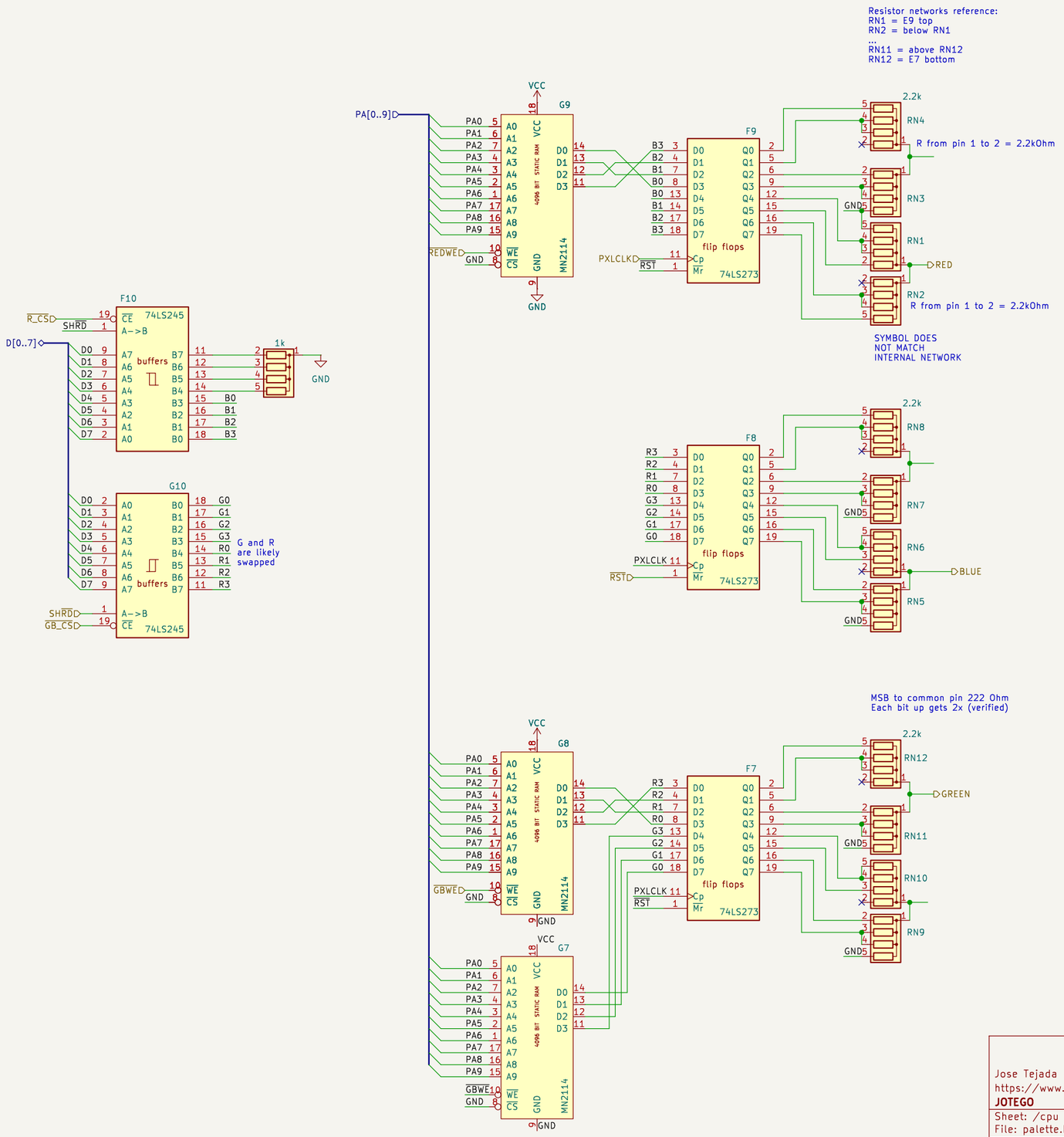

Jose Tejada
https://www.patreon.com/jotego
JOTEGO

Sheet: /cpu board/palette/
File: palette.kicad_sch

Title: Color Palette

Size: A3	Date: 2024-11-15	**Rev:**
KiCad E.D.A. 8.0.9		Id: #/26