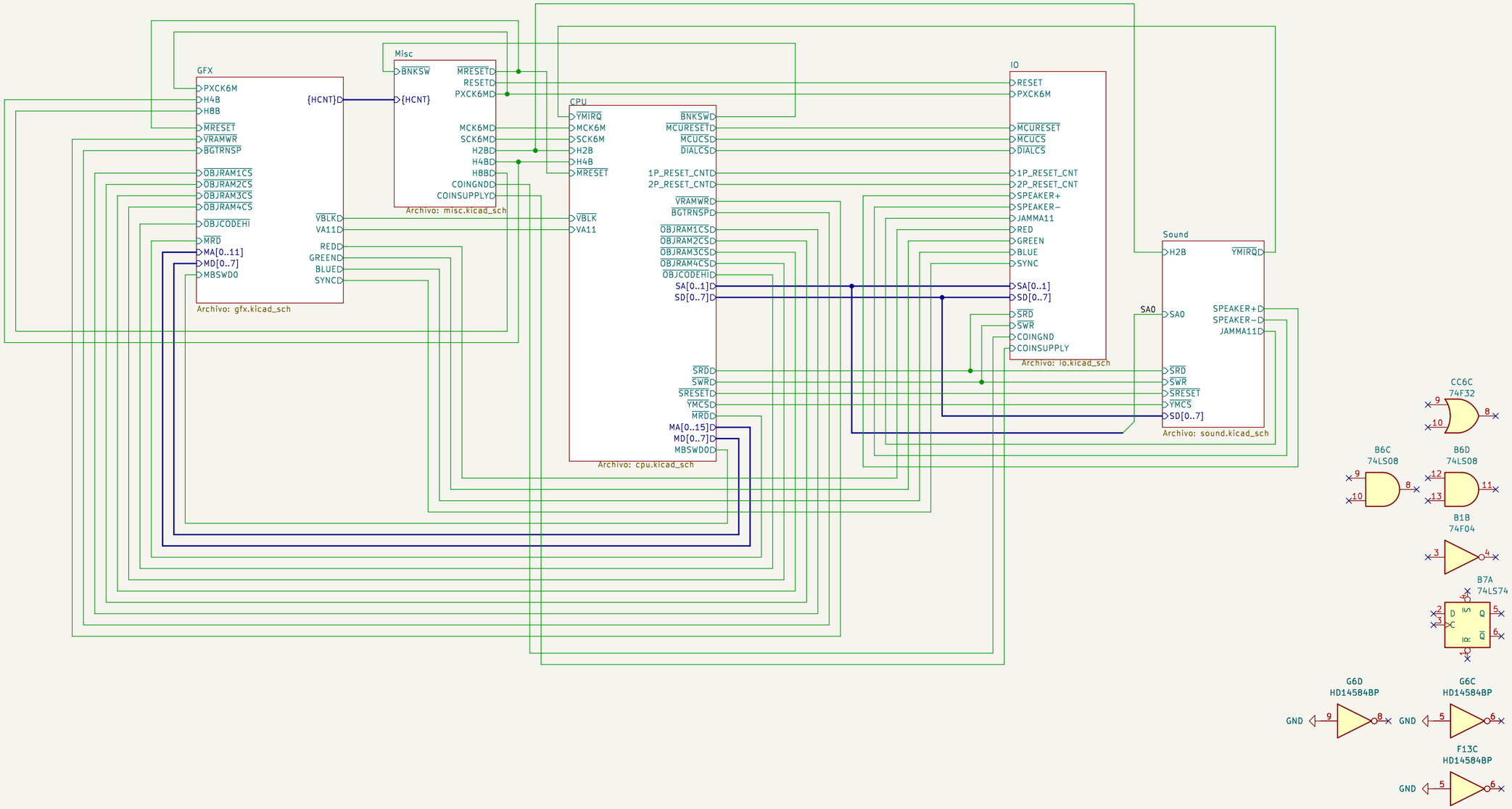

Seta number: P0-022-A

Ulf Skutnabba, twitter: @skutis77

Sheet: /

File: arknoid2.kicad_sch

Title: Arkanoid: Revenge of Doh

Size: A3	Date: 2023-02-22	**Rev:**
KiCad E.D.A. kicad-cli 7.0.10-7.0.10~ubuntu20.04.1		Id: 1/6

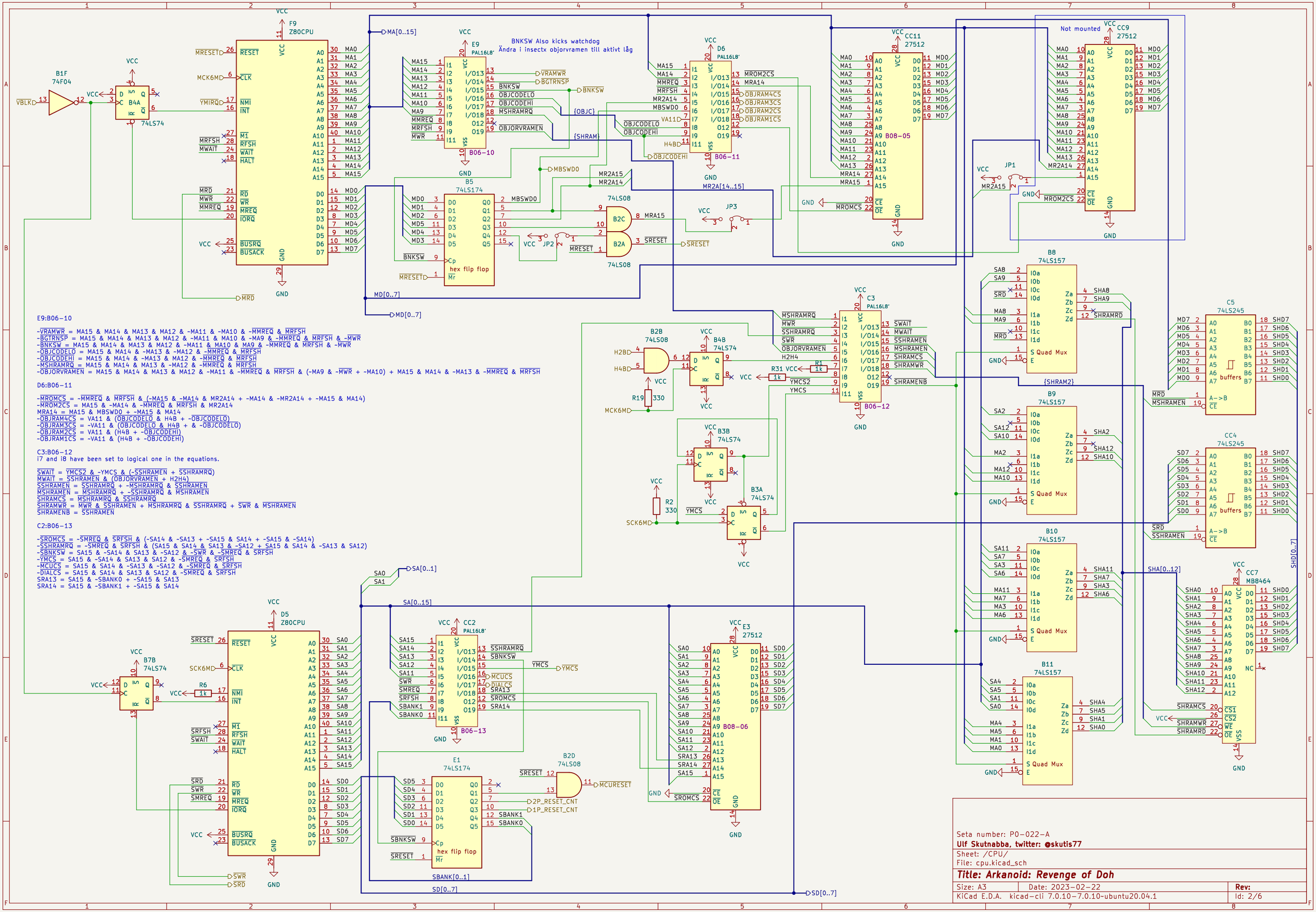

Seta number: P0-022-A
Ulf Skutnabba, twitter: @skutis77
Sheet: /CPU/
File: cpu.kicad_sch
Title: Arkanoid: Revenge of Doh

Size: A3	Date: 2023-02-22	**Rev:**
KiCad E.D.A. kicad-cli 7.0.10-7.0.10~ubuntu20.04.1		Id: 2/6

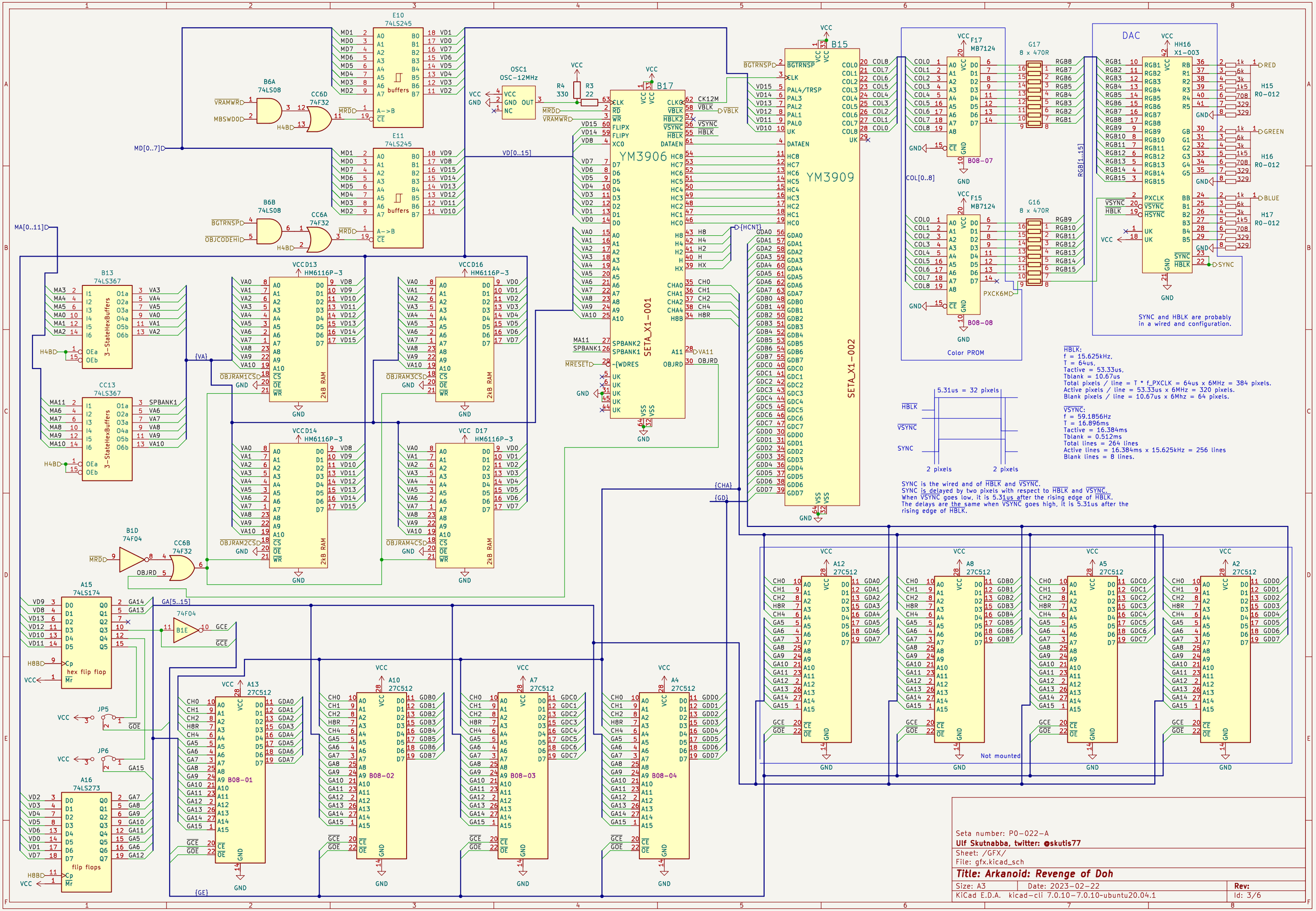
E10
74LS245
E11
74LS245
B6A
74LS08
CC6D
74F32
B6B
74LS08
CC6A
74F32
OSC1
OSC-12MHz
B17
YM3906
SETA_X1-001
B15
YM3909
SETA_X1-002
B13
74LS367
CC13
74LS367
3-StateHexBuffers
HM6116P-3
2kB RAM
B1D
74F04
CC6B
74F32
A15
74LS174
hex flip flop
74F04
B1E
JP5
JP6
A16
74LS273
flip flops
A13
27C512
B08-01
A10
27C512
B08-02
A7
27C512
B08-03
A4
27C512
B08-04
A12
27C512
A8
27C512
A5
27C512
A2
27C512
F17
MB7124
B08-07
F15
MB7124
B08-08
Color PROM
G17
8 x 470R
G16
8 x 470R
DAC
HH16
X1-003
H15
R0-012
H16
R0-012
H17
R0-012
RED
GREEN
BLUE
SYNC
SYNC and HBLK are probably in a wired and configuration.
HBLK:
f = 15.625kHz,
T = 64us,
Tactive = 53.33us,
Tblank = 10.67us
Total pixels / line = T * f_PXCLK = 64us x 6MHz = 384 pixels.
Active pixels / line = 53.33us x 6MHz = 320 pixels.
Blank pixels / line = 10.67us x 6Mhz = 64 pixels.
VSYNC:
f = 59.1856Hz
T = 16.896ms
Tactive = 16.384ms
Tblank = 0.512ms
Total lines = 264 lines
Active lines = 16.384ms x 15.625kHz = 256 lines
Blank lines = 8 lines.
5.31us = 32 pixels
HBLK
VSYNC
SYNC
2 pixels
2 pixels
SYNC is the wired and of HBLK and VSYNC.
SYNC is delayed by two pixels with respect to HBLK and VSYNC.
When VSYNC goes low, it is 5.31us after the rising edge of HBLK.
The delays are the same when VSYNC goes high, it is 5.31us after the rising edge of HBLK.
Not mounted
Seta number: P0-022-A
Ulf Skutnabba, twitter: @skutis77
Sheet: /GFX/
File: gfx.kicad_sch
Title: Arkanoid: Revenge of Doh
Size: A3
Date: 2023-02-22
Rev:
KiCad E.D.A. kicad-cli 7.0.10-7.0.10~ubuntu20.04.1
Id: 3/6

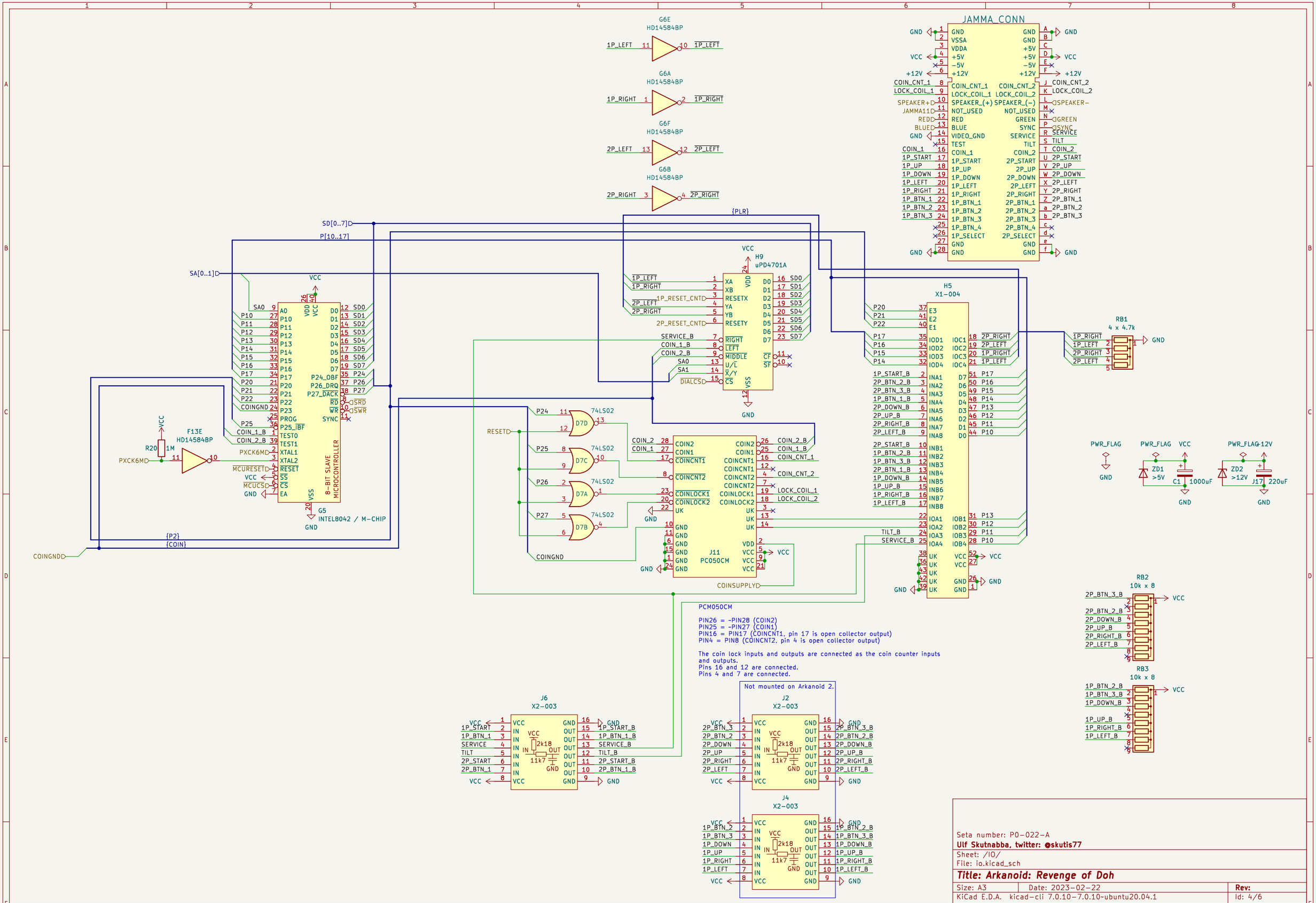
G6E
HD14584BP
G6A
HD14584BP
G6F
HD14584BP
G6B
HD14584BP
JAMMA_CONN
H9
uPD4701A
H5
X1-004
RB1
4 x 4.7k
RB2
10k x 8
RB3
10k x 8
F13E
HD14584BP
G5
INTEL8042 / M-CHIP
8-BIT SLAVE MICROCONTROLLER
J11
PC050CM
74LS02
J6
X2-003
J2
X2-003
J4
X2-003
Not mounted on Arkanoid 2.
PCM050CM
PIN26 = ~PIN28 (COIN2)
PIN25 = ~PIN27 (COIN1)
PIN16 = PIN17 (COINCNT1, pin 17 is open collector output)
PIN4 = PIN8 (COINCNT2, pin 4 is open collector output)
The coin lock inputs and outputs are connected as the coin counter inputs and outputs.
Pins 16 and 12 are connected.
Pins 4 and 7 are connected.
PWR_FLAG
ZD1 >5V
C1 1000uF
ZD2 >12V
J17 220uF
Seta number: P0-022-A
Ulf Skutnabba, twitter: @skutis77
Sheet: /IO/
File: io.kicad_sch
Title: Arkanoid: Revenge of Doh
Size: A3
Date: 2023-02-22
Rev:
KiCad E.D.A. kicad-cli 7.0.10-7.0.10~ubuntu20.04.1
Id: 4/6

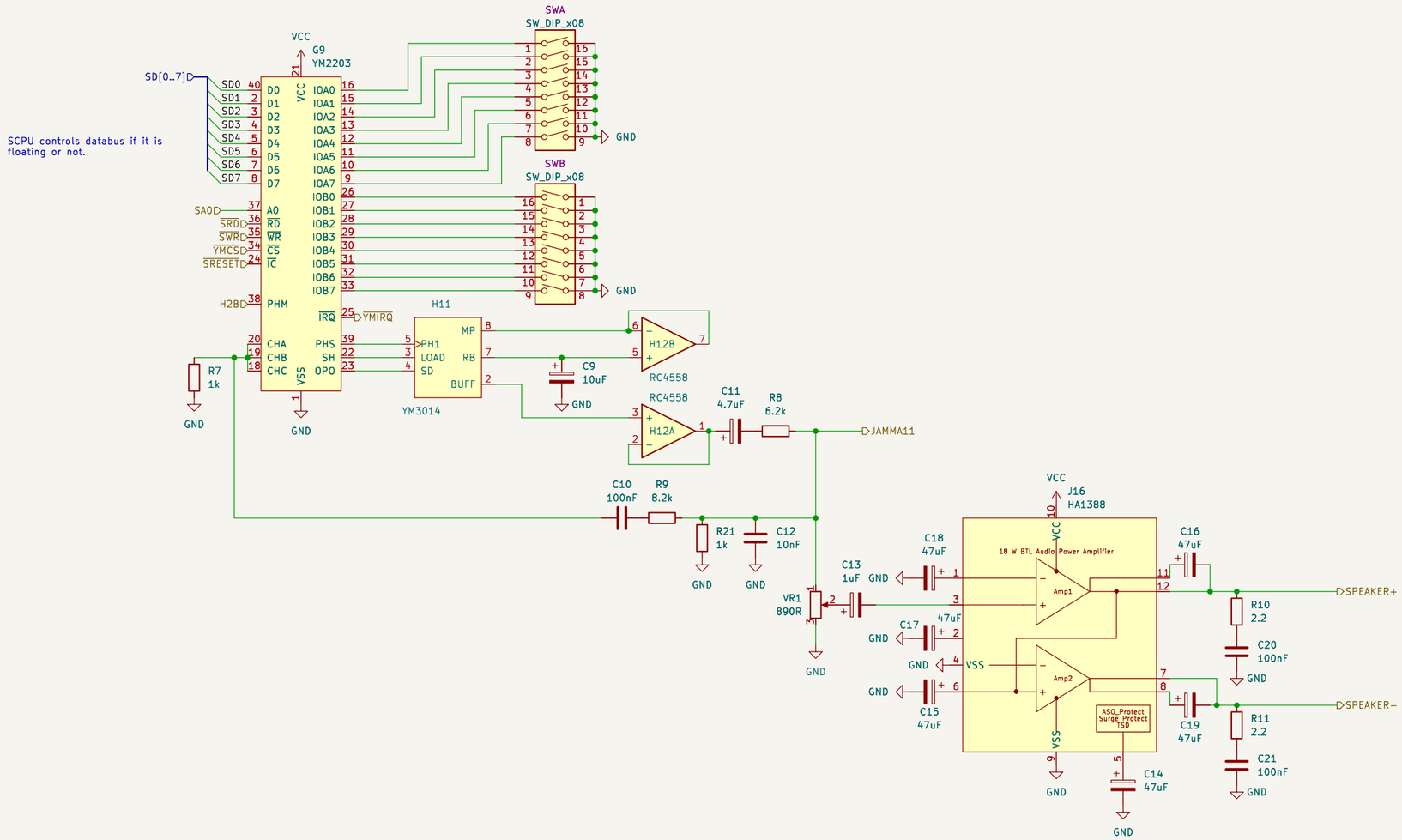

Seta number: P0-022-A

Ulf Skutnabba, twitter: @skutis77

Sheet: /Sound/

File: sound.kicad_sch

Title: Arkanoid: Revenge of Doh

Size: A3	Date: 2023-02-22	**Rev:**
KiCad E.D.A. kicad-cli 7.0.10-7.0.10~ubuntu20.04.1		Id: 5/6

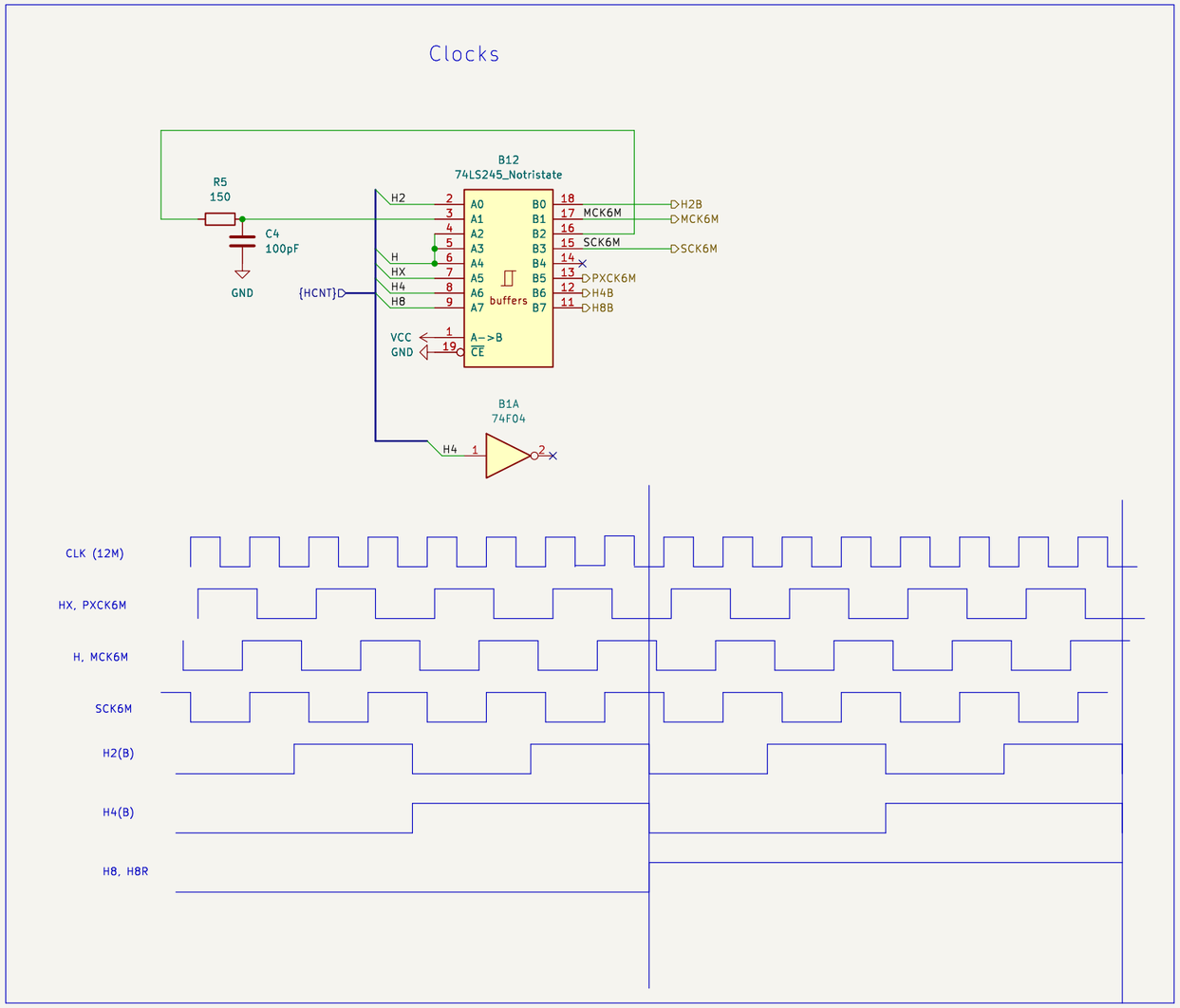

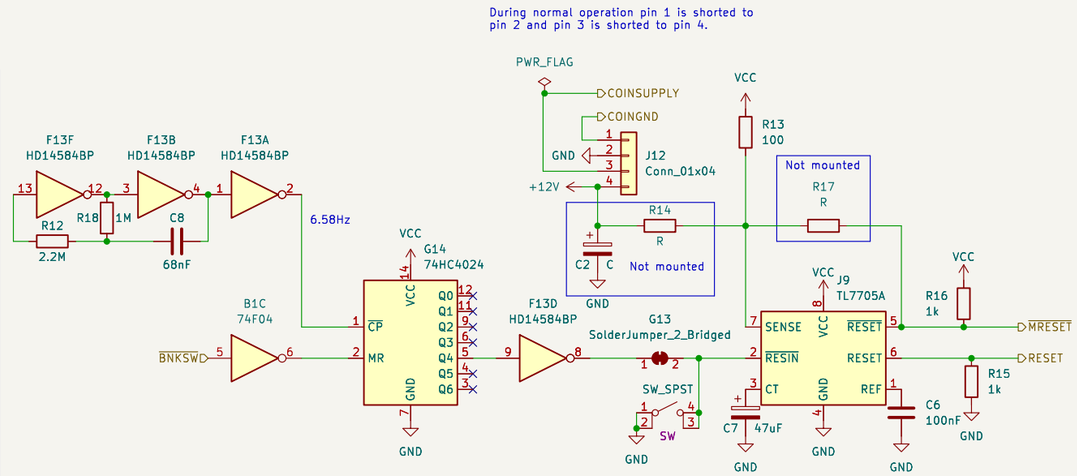

Seta number: P0-022-A

Ulf Skutnabba, twitter: @skutis77

Sheet: /Misc/

File: misc.kicad_sch

Title: Arkanoid: Revenge of Doh

Size: A3	Date: 2023-02-22	**Rev:**
KiCad E.D.A. kicad-cli 7.0.10-7.0.10~ubuntu20.04.1		Id: 6/6