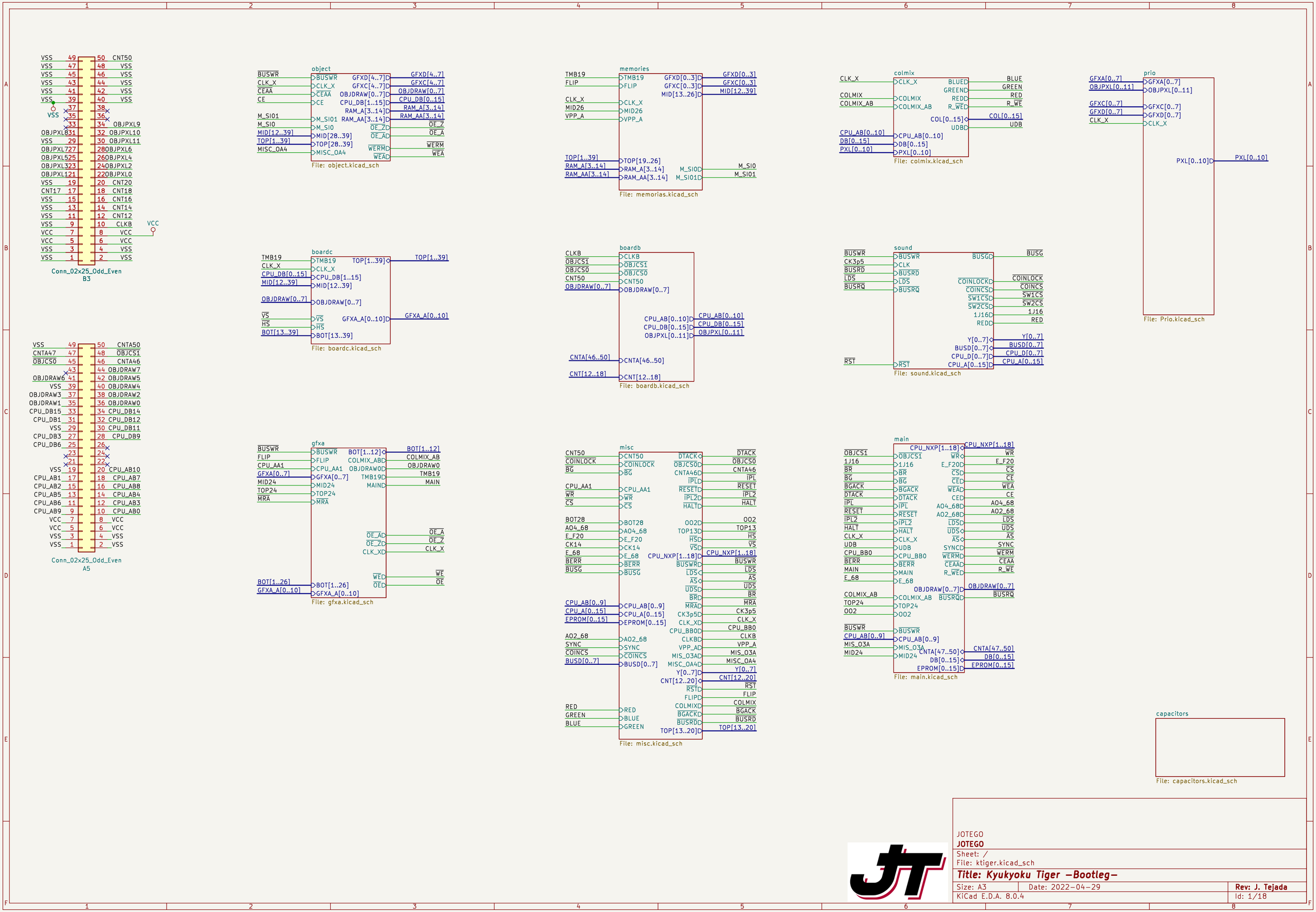
Conn_02x25_Odd_Even
B3
Conn_02x25_Odd_Even
A5
object
File: object.kicad_sch
memories
File: memorias.kicad_sch
colmix
File: colmix.kicad_sch
prio
File: Prio.kicad_sch
boardc
File: boardc.kicad_sch
boardb
File: boardb.kicad_sch
sound
File: sound.kicad_sch
gfxa
File: gfxa.kicad_sch
misc
File: misc.kicad_sch
main
File: main.kicad_sch
capacitors
File: capacitors.kicad_sch
JOTEGO
JOTEGO
Sheet: /
File: ktiger.kicad_sch
Title: Kyukyoku Tiger –Bootleg–
Size: A3
Date: 2022-04-29
Rev: J. Tejada
KiCad E.D.A. 8.0.4
Id: 1/18

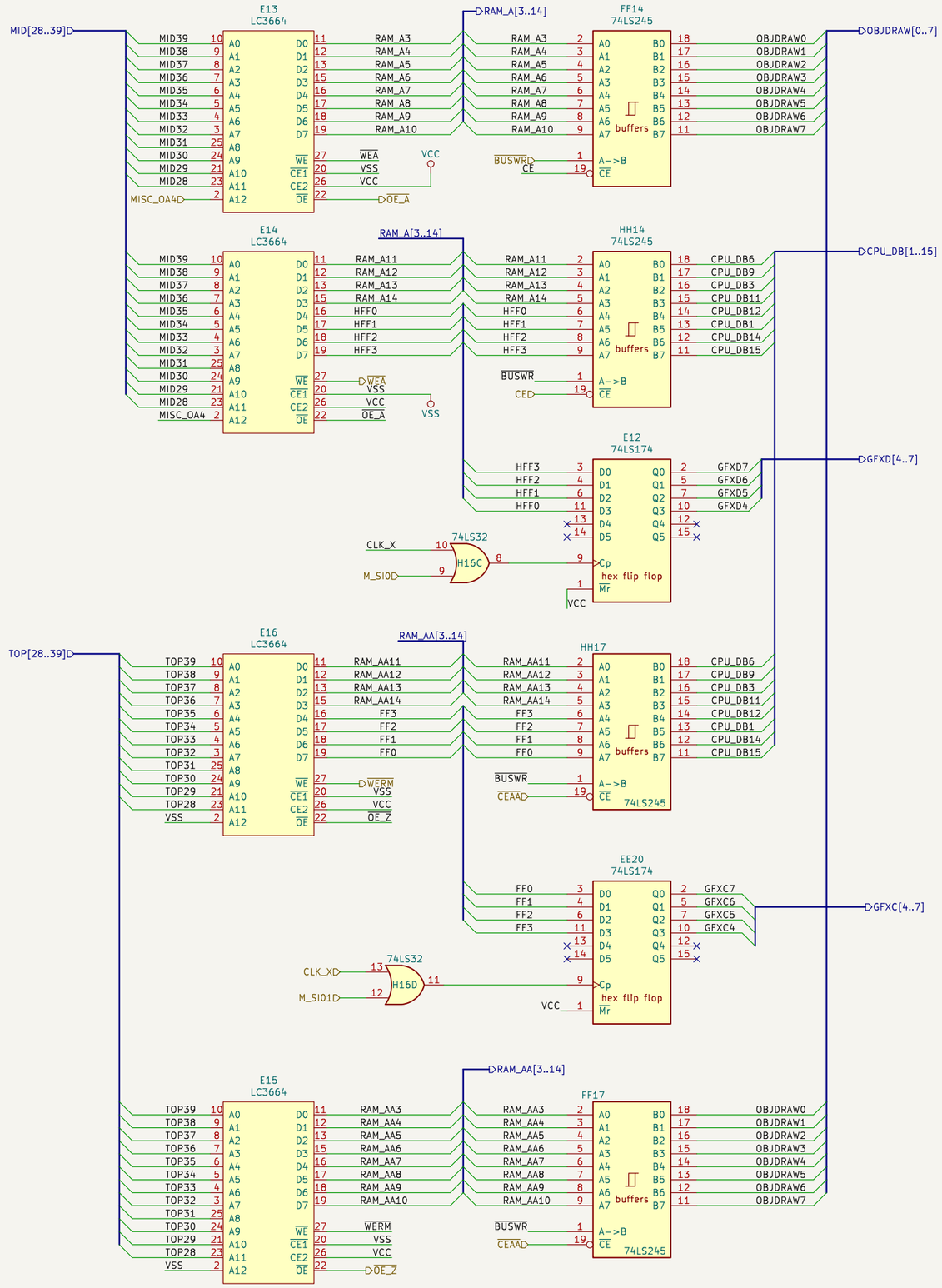

JOTEGO
JOTEGO
Sheet: /object/
File: object.kicad_sch

Title:

Size: A3	Date: 2022-04-29	**Rev: J. Tejada**
KiCad E.D.A. 8.0.4		Id: 2/18

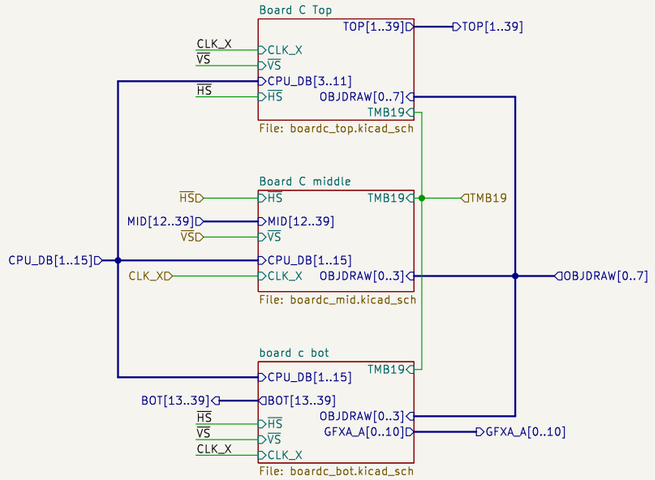

JOTEGO
JOTEGO

Sheet: /boardc/
File: boardc.kicad_sch

Title: Kyukyoku Tiger –Bootleg–

Size: A3	Date: 2022-04-29	**Rev: J. Tejada**
KiCad E.D.A. 8.0.4		Id: 3/18

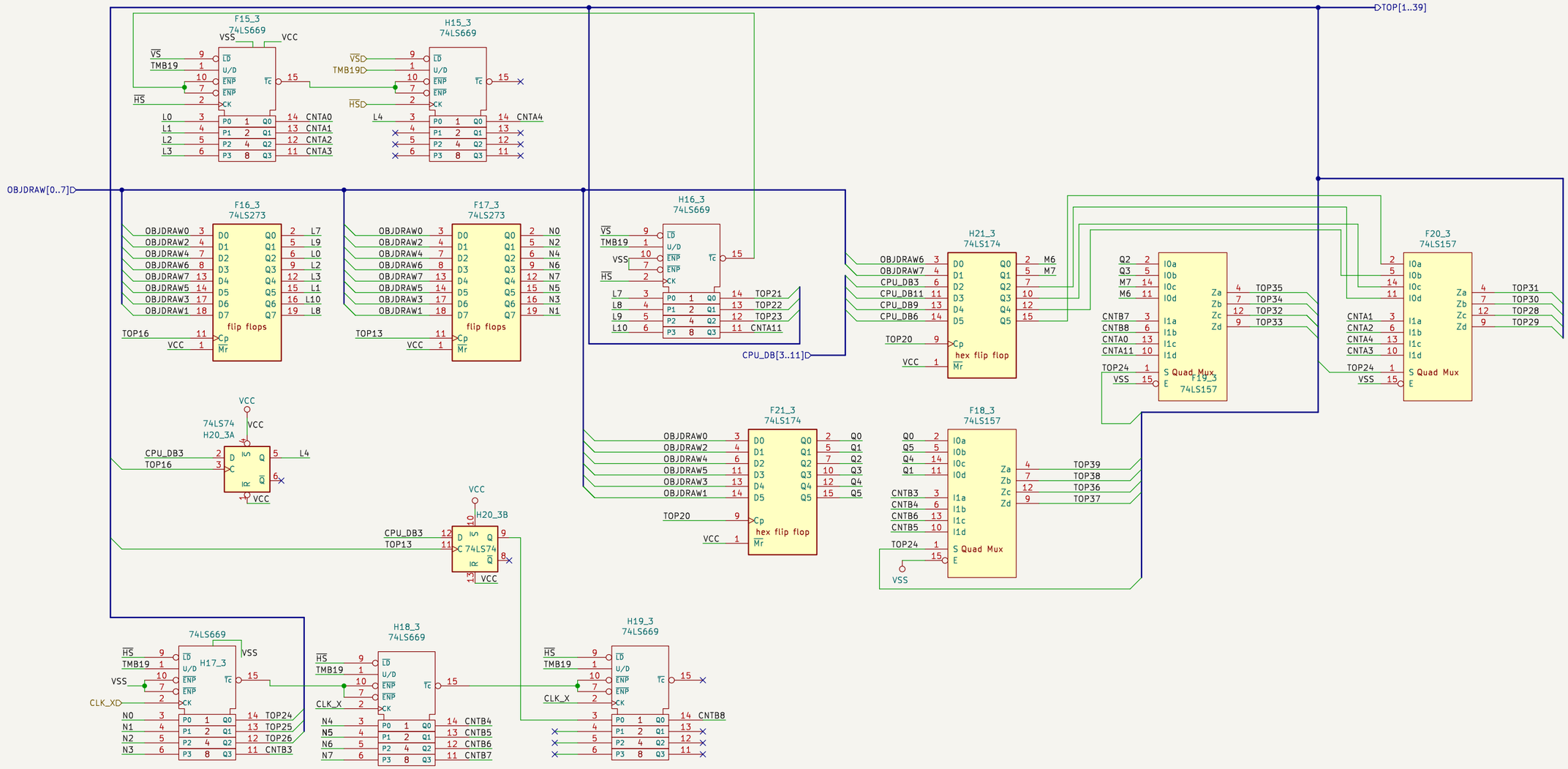

JOTEGO

JOTEGO

Sheet: /boardc/Board C Top/

File: boardc_top.kicad_sch

Title:

Size: A3	Date: 2022-04-29	**Rev: J. Tejada**
KiCad E.D.A. 8.0.4		Id: 4/18

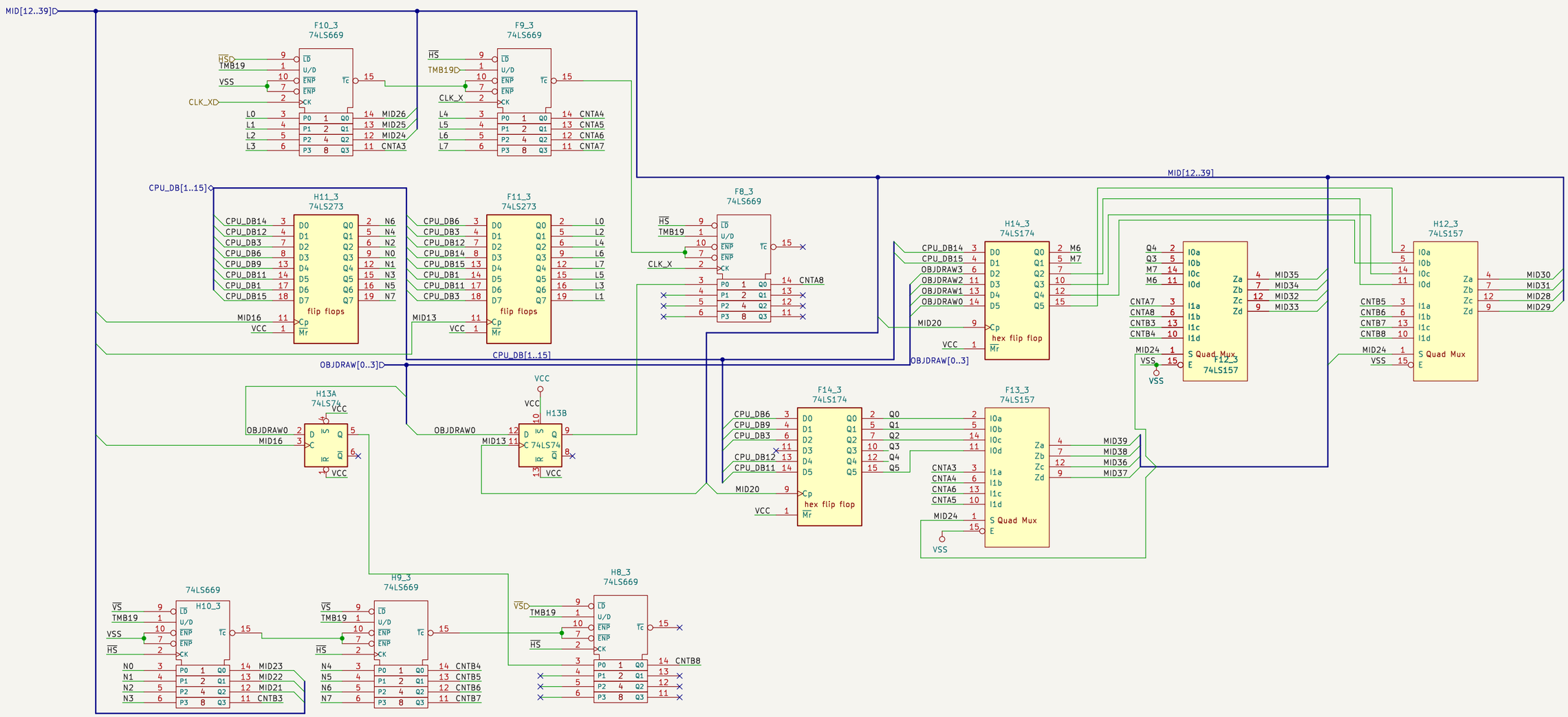

JOTEGO

JOTEGO

Sheet: /boardc/Board C middle/

File: boardc_mid.kicad_sch

Title:

Size: A3	Date: 2022-04-29	**Rev: J. Tejada**
KiCad E.D.A. 8.0.4		Id: 5/18

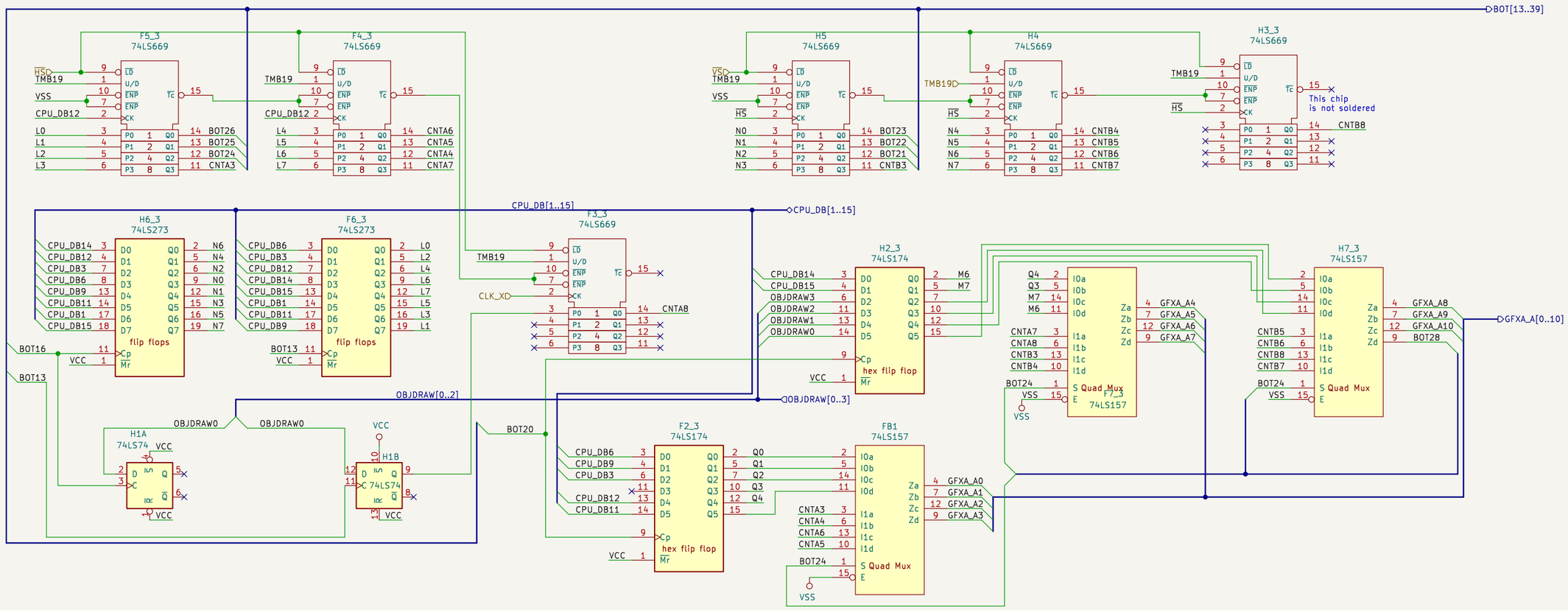

JOTEGO

JOTEGO

Sheet: /boardc/board c bot/

File: boardc_bot.kicad_sch

Title:

Size: A3	Date: 2022-04-29	**Rev: J. Tejada**
KiCad E.D.A. 8.0.4		Id: 6/18

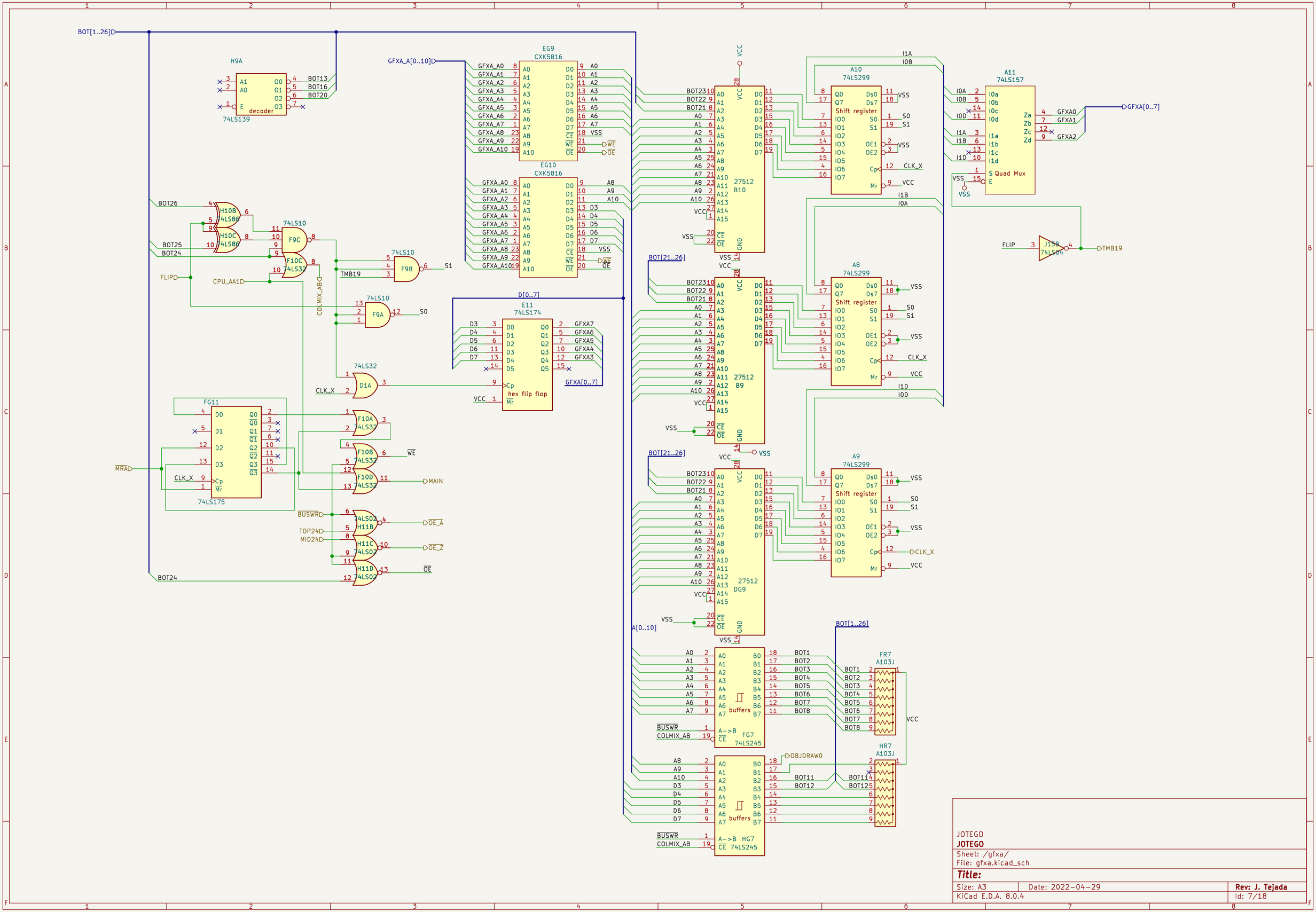

JOTEGO

JOTEGO

Sheet: /gfxa/

File: gfxa.kicad_sch

Title:

Size: A3	Date: 2022-04-29	**Rev: J. Tejada**
KiCad E.D.A. 8.0.4		Id: 7/18

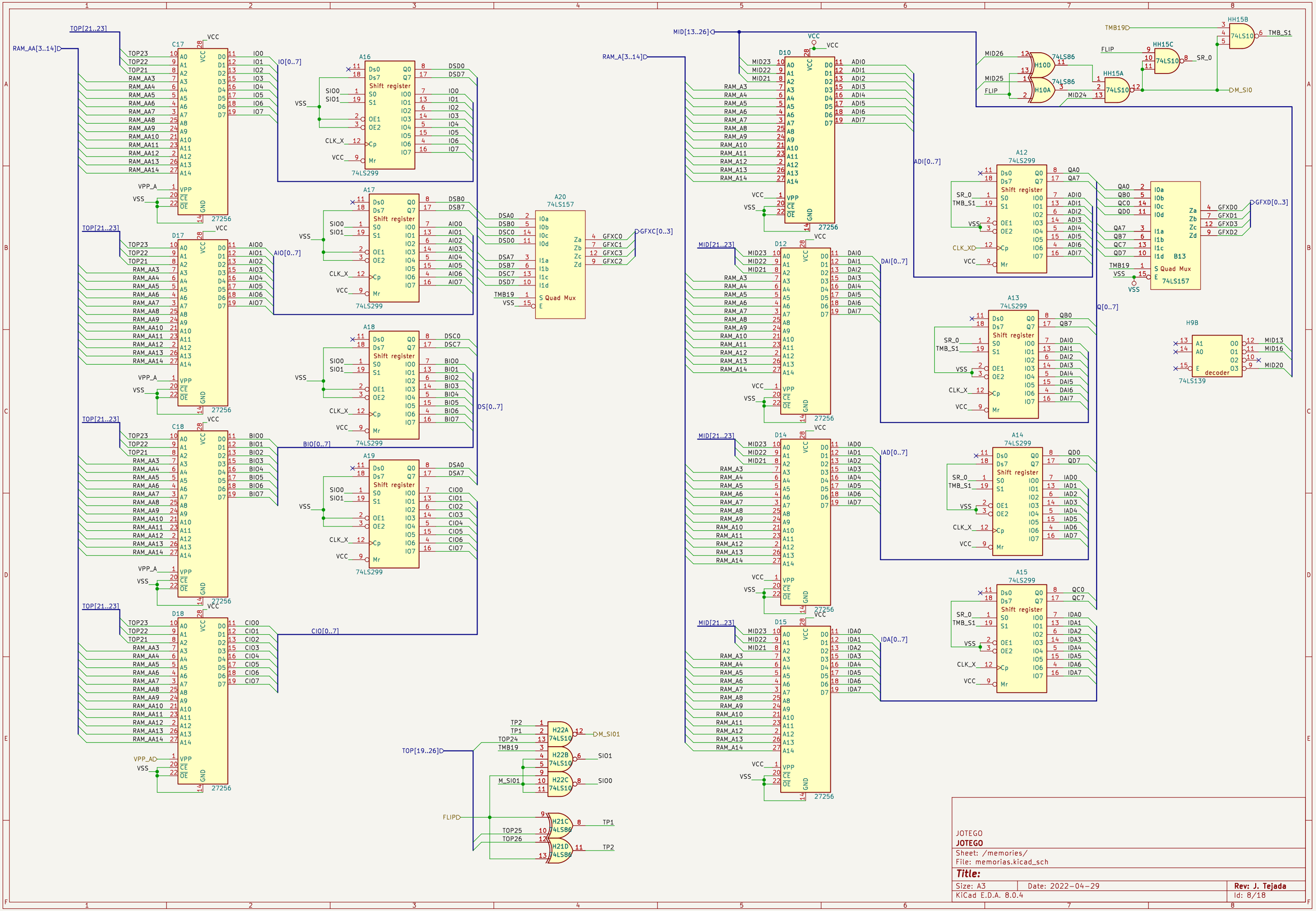

JOTEGO

JOTEGO

Sheet: /memories/

File: memorias.kicad_sch

Title:

Size: A3	Date: 2022-04-29	**Rev: J. Tejada**
KiCad E.D.A. 8.0.4		Id: 8/18

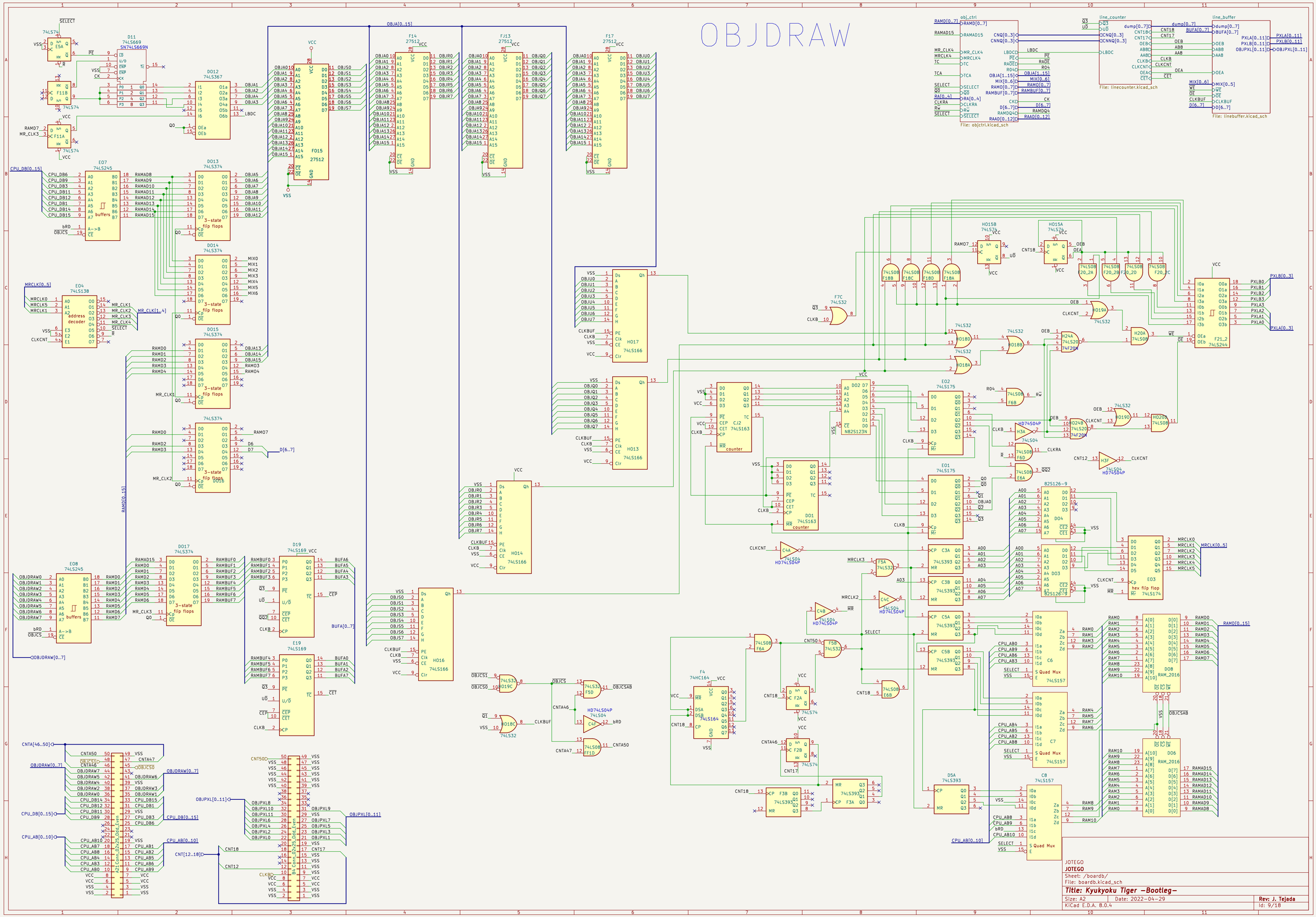
OBJDRAW
obj_ctrl
File: objctrl.kicad_sch
line_counter
File: linecounter.kicad_sch
line_buffer
File: linebuffer.kicad_sch
JOTEGO
JOTEGO
Sheet: /boardb/
File: boardb.kicad_sch
Title: Kyukyoku Tiger –Bootleg–
Size: A2
Date: 2022-04-29
Rev: J. Tejada
KiCad E.D.A. 8.0.4
Id: 9/18

OBJCTRL

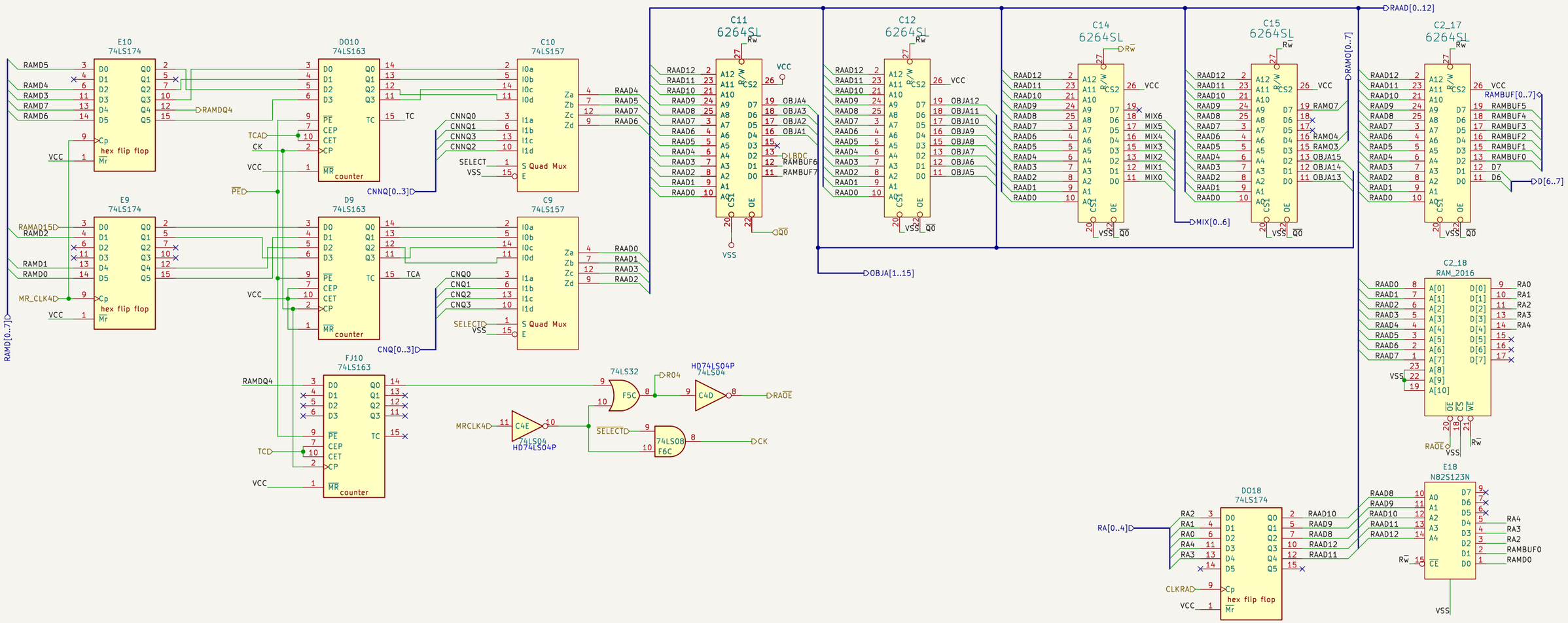

JOTEGO

JOTEGO

Sheet: /boardb/obj_ctrl/

File: objctrl.kicad_sch

Title:

Size: A3	Date: 2022-04-29	**Rev: J. Tejada**
KiCad E.D.A. 8.0.4		Id: 10/18

Line buffer dump counter

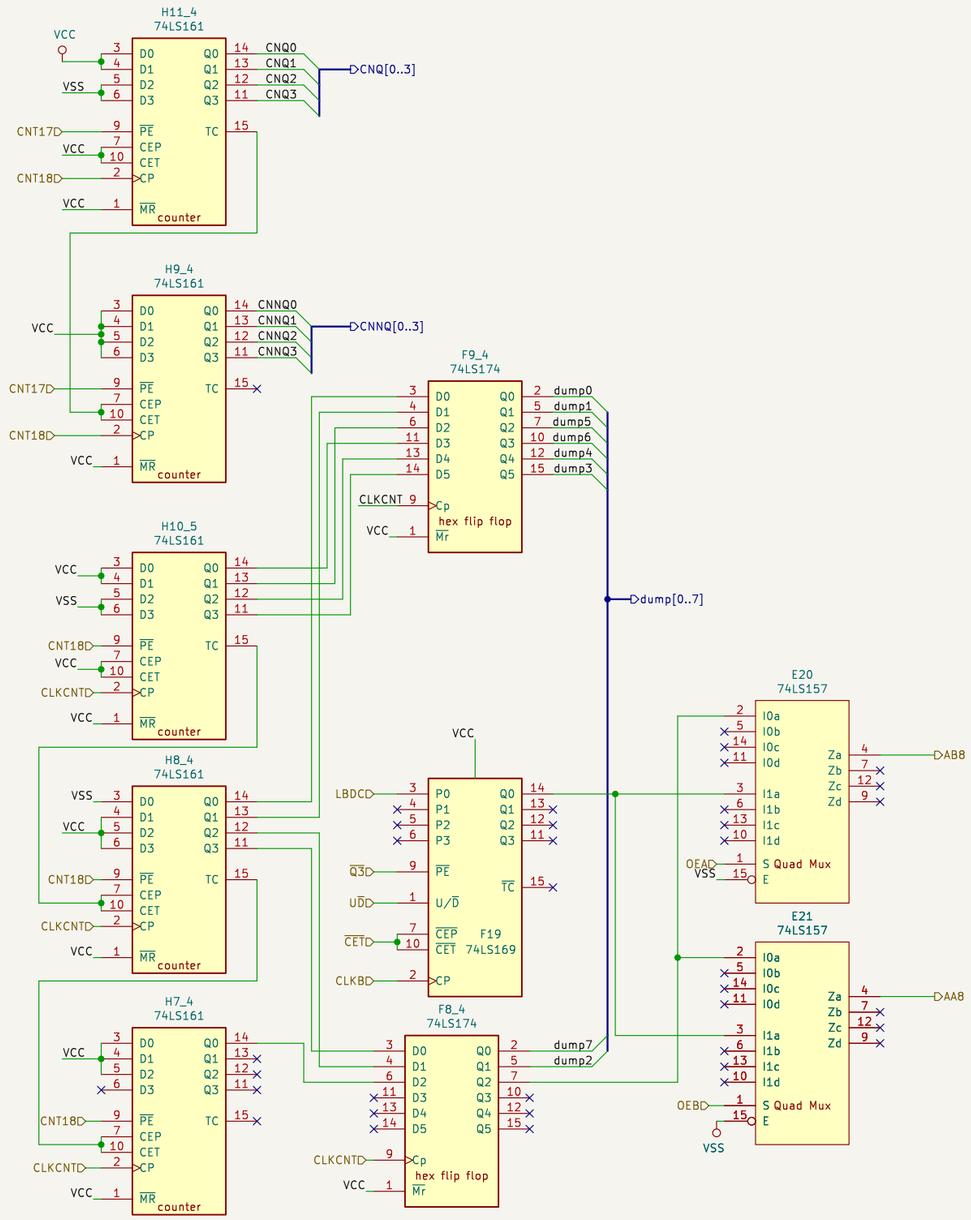

JOTEGO
JOTEGO
Sheet: /boardb/line_counter/
File: linecounter.kicad_sch

Title:

Size: A3	Date: 2022-04-29	**Rev: J. Tejada**
KiCad E.D.A. 8.0.4		Id: 11/18

Line buffer A

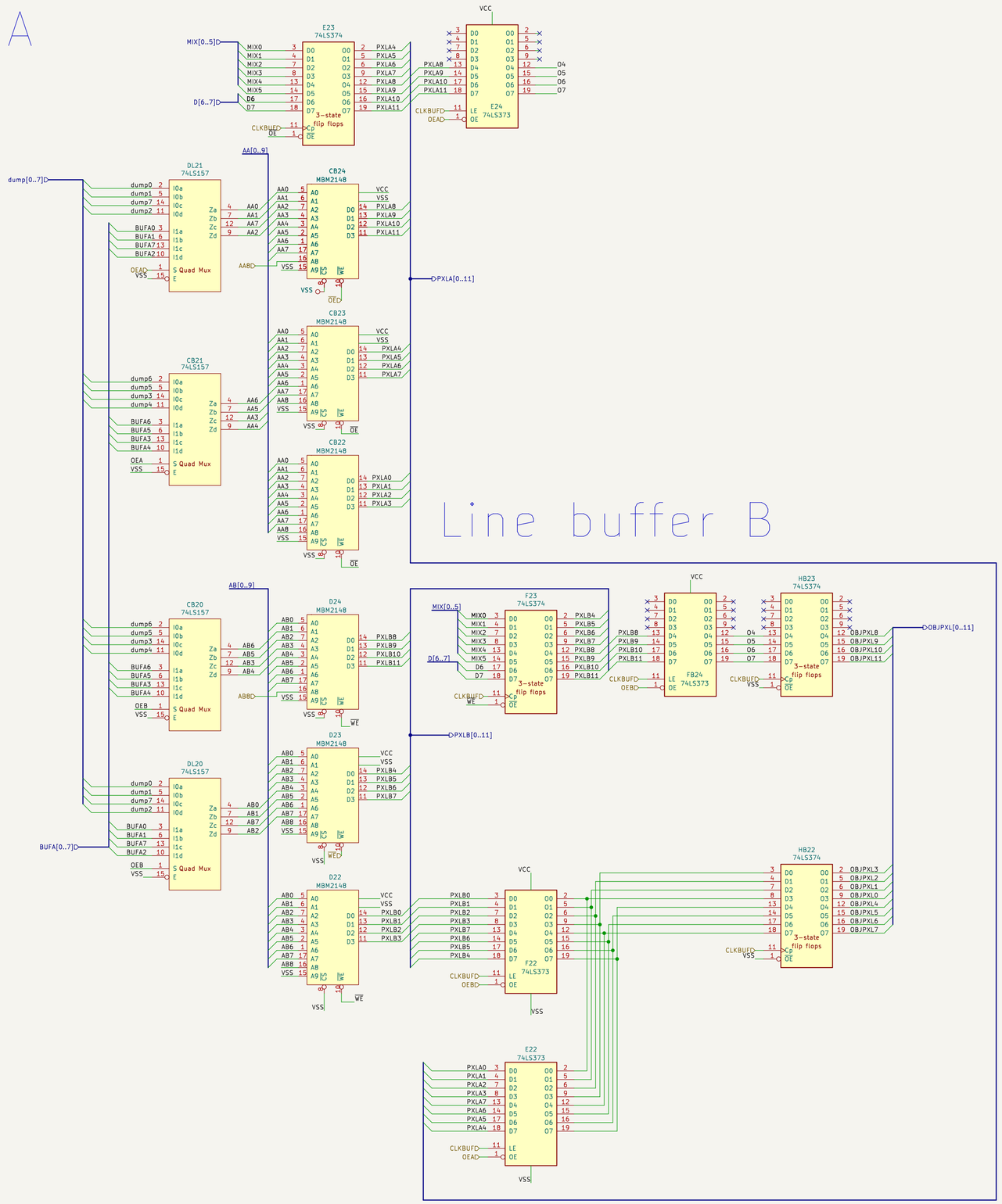

Line buffer B

JOTEGO

JOTEGO

Sheet: /boardb/line_buffer/

File: linebuffer.kicad_sch

Title: Kyukyoku Tiger –Bootleg–

Size: A2	Date: 2022-04-29	**Rev: J. Tejada**
KiCad E.D.A. 8.0.4		Id: 12/18

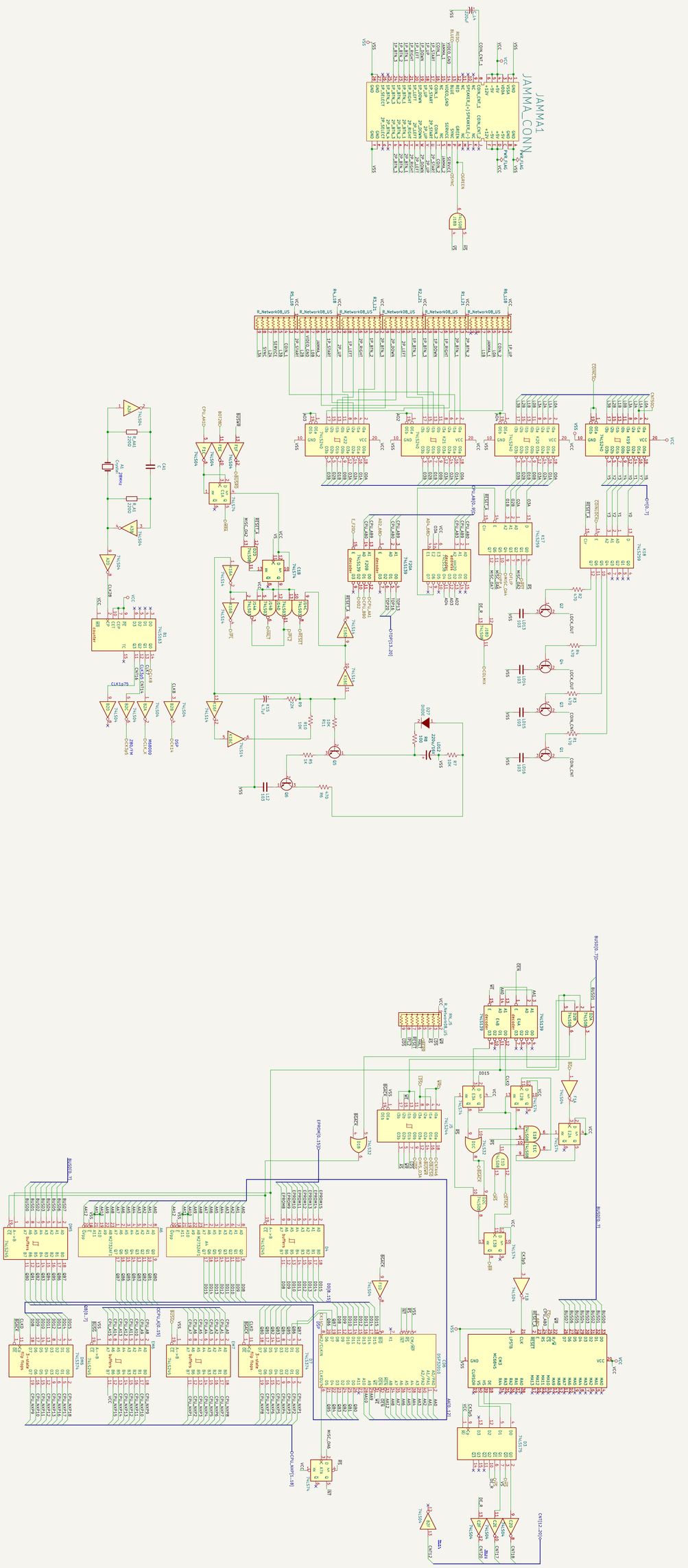
JAMMA1
JAMMA_CONN
JOYTEQ
Joystick Interface
File: misc_io.sch
Title:
Size: A1
Date: 2022-01-29
KiCad E.D.A. 6.0.11
Rev: J. Tejada
01-17-19

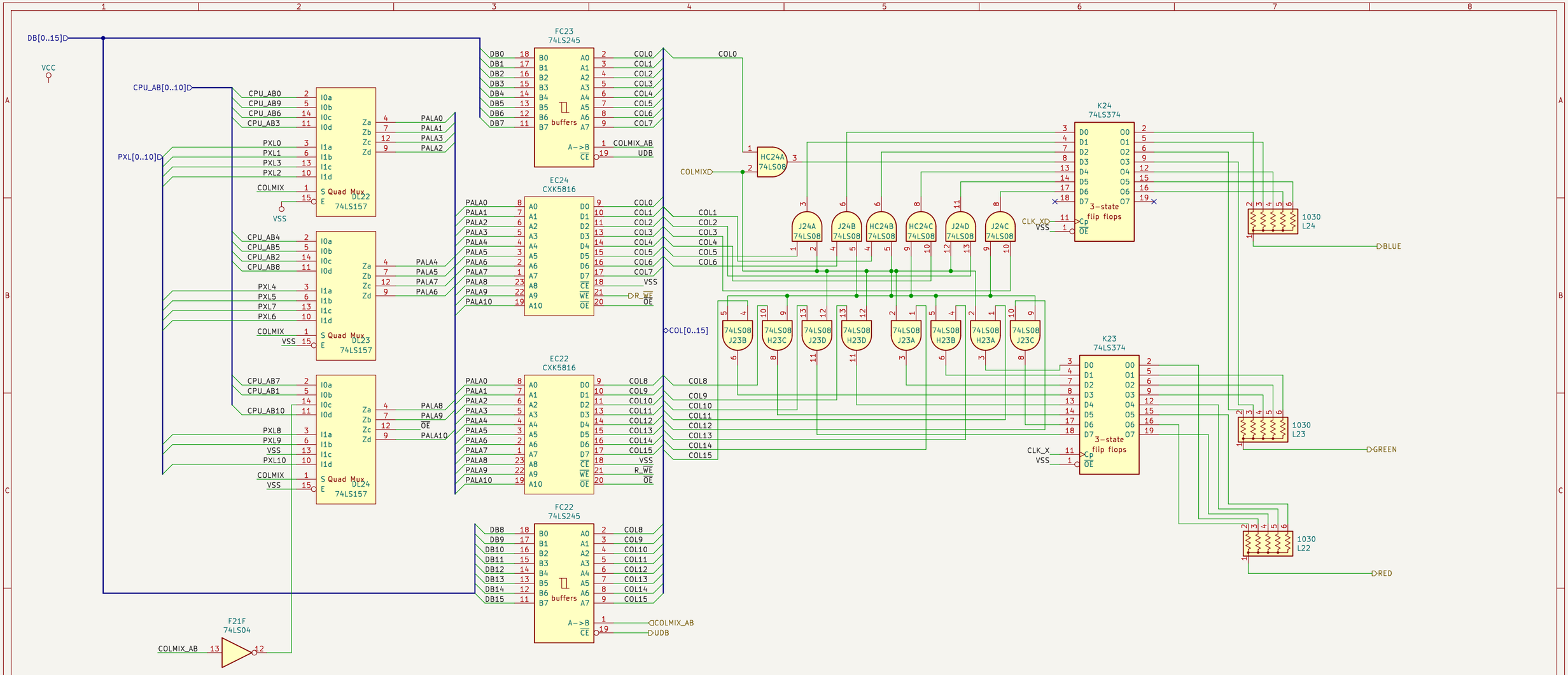

JOTEGO

JOTEGO

Sheet: /colmix/

File: colmix.kicad_sch

Title: Kyukyoku Tiger Bootleg

Size: A3	Date: 2022-04-29	**Rev: J. Tejada**
KiCad E.D.A. 8.0.4		Id: 14/18

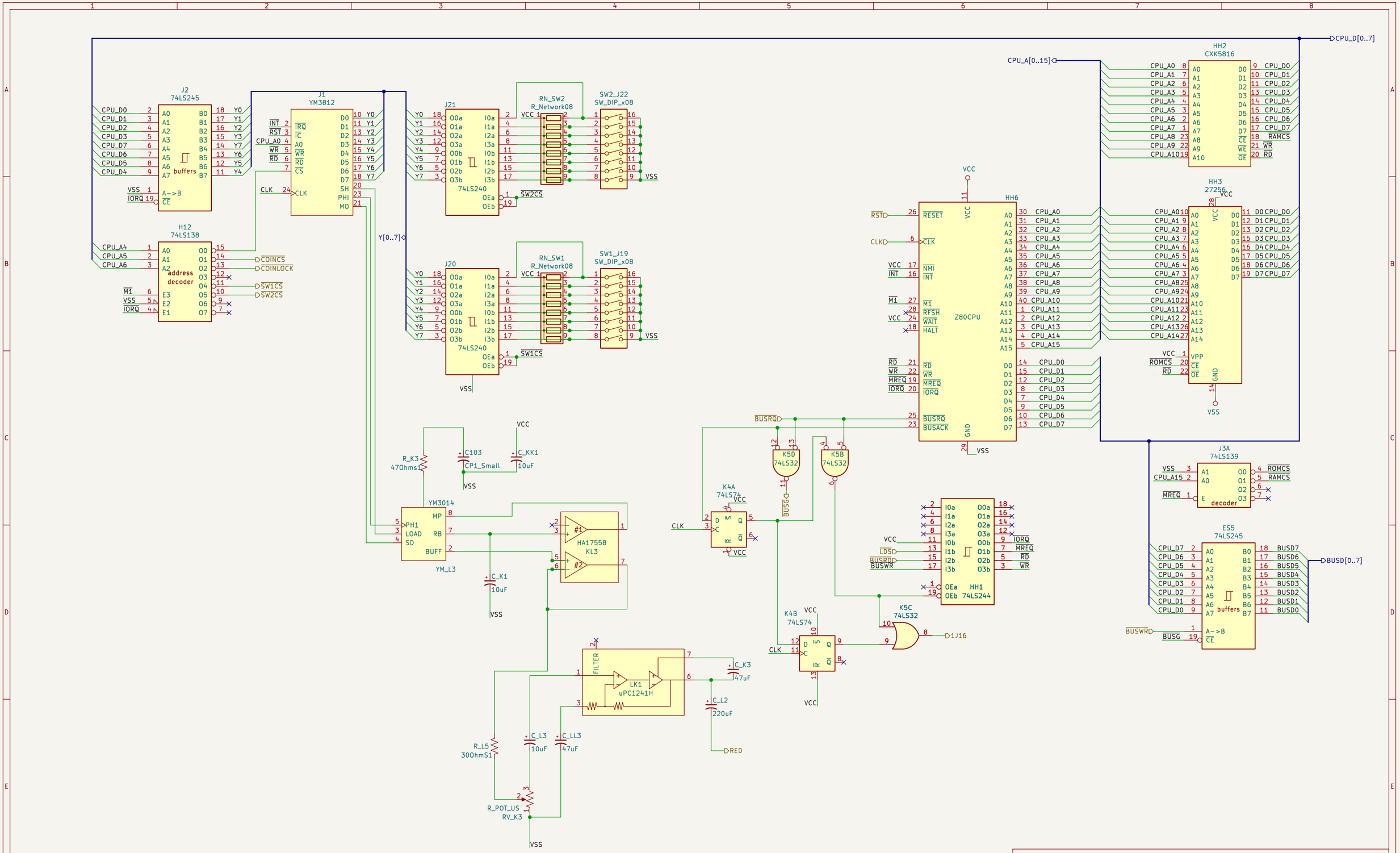

JOTEGO

JOTEGO

Sheet: /sound/

File: sound.kicad_sch

Title: Kyukyoku Tiger –Bootleg–

Size: A3	Date: 2022-04-29	**Rev: J. Tejada**
KiCad E.D.A. 8.0.4		Id: 15/18

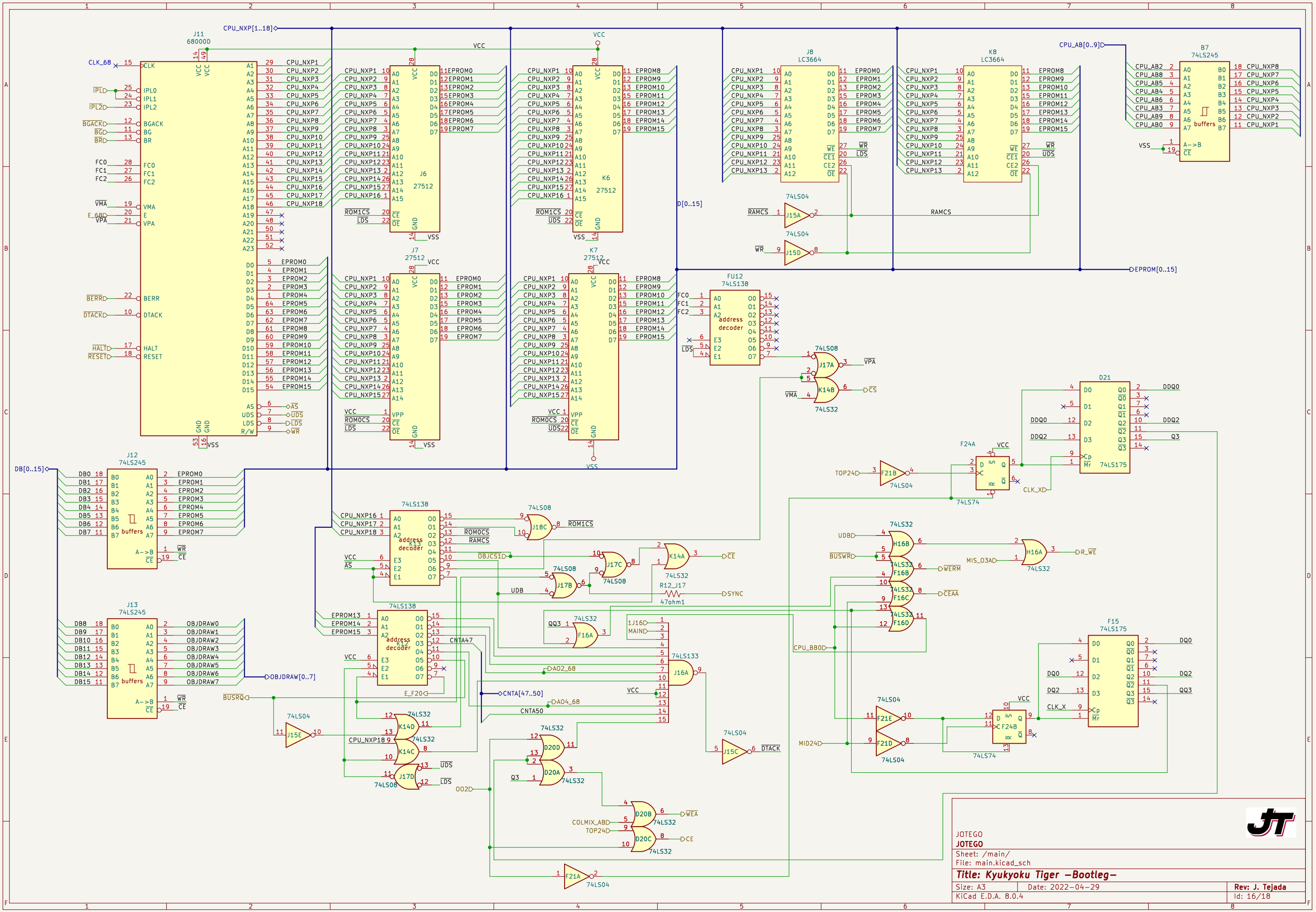
J11
68000D
CPU_NXP[1..18]
CLK_68
IPL0
IPL1
IPL2
BGACK
BG
BR
FC0
FC1
FC2
VMA
E_68
VPA
BERR
DTACK
HALT
RESET
J6
27512
J7
27512
K6
27512
K7
27512
J8
LC3664
K8
LC3664
B7
74LS245
buffers
D[0..15]
EPROM[0..15]
CPU_AB[0..9]
74LS04
J15A
J15D
RAMCS
FU12
74LS138
address decoder
74LS08
J17A
K14B
74LS32
VPA
CS
D21
74LS175
DDQ0
DDQ2
Q3
F24A
74LS74
TOP24
F21B
CLK_XD
J12
74LS245
DB[0..15]
J13
74LS245
OBJDRAW[0..7]
K13
74LS138
K12
74LS138
J18C
ROM1CS
ROMOCS
RAMCS
OBJCS1
J17C
J17B
K14A
CE
SYNC
R12_J17
47ohm1
UDB
BUSWR
H16B
H16A
R_WE
WERM
CEAA
MIS_03A
F16A
F16B
F16C
F16D
QQ3
1J16
MAIN
74LS133
J16A
CNTA47
CNTA[47..50]
A02_68
A04_68
CNTA50
E_F20
BUSRQ
J15E
K14D
K14C
J17D
UDS
LDS
OO2
D20D
D20A
D20B
D20C
COLMIX_ABD
WEA
F21A
J15C
DTACK
CPU_BB0D
MID24D
F21E
F21D
F24B
F15
74LS175
DQ0
DQ2
CLK_X
VCC
VSS
JOTEGO
JOTEGO
Sheet: /main/
File: main.kicad_sch
Title: Kyukyoku Tiger –Bootleg–
Size: A3
Date: 2022-04-29
Rev: J. Tejada
KiCad E.D.A. 8.0.4
Id: 16/18

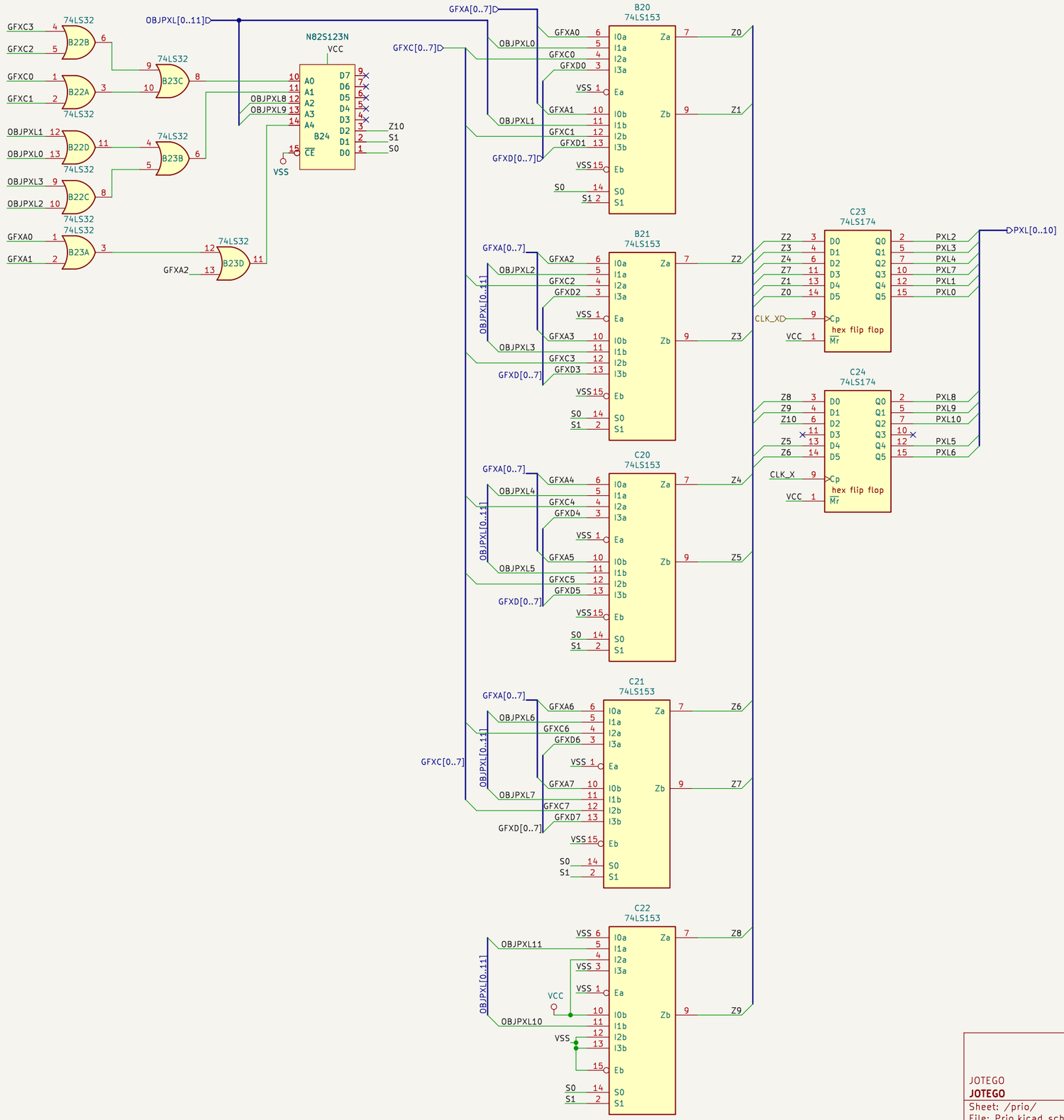

JOTEGO
JOTEGO

Sheet: /prio/
File: Prio.kicad_sch

Title:

Size: A3	Date: 2022-04-29	**Rev: J. Tejada**
KiCad E.D.A. 8.0.4		Id: 17/18

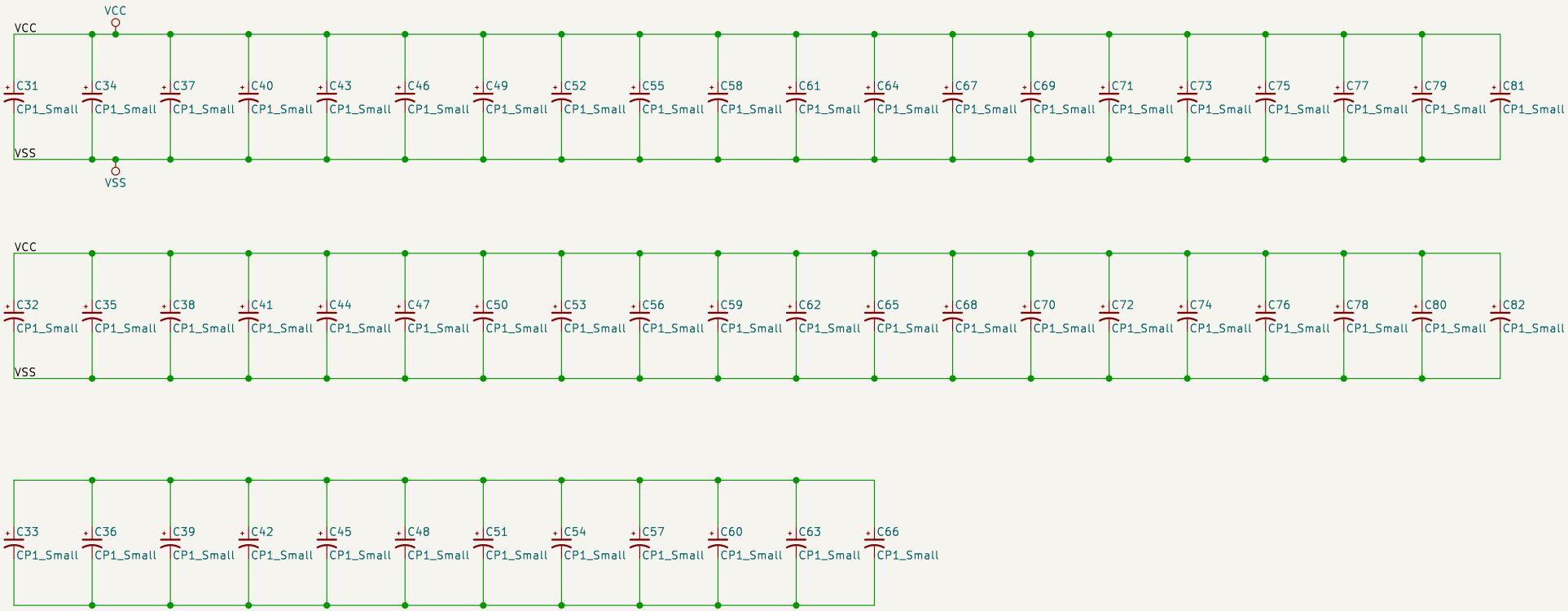

JOTEGO
JOTEGO

Sheet: /capacitors/
File: capacitors.kicad_sch

Title:

Size: A4	Date: 2022-04-29	**Rev: J. Tejada**
KiCad E.D.A. 8.0.4		Id: 18/18